INSTALLATION INSTRUCTIONS

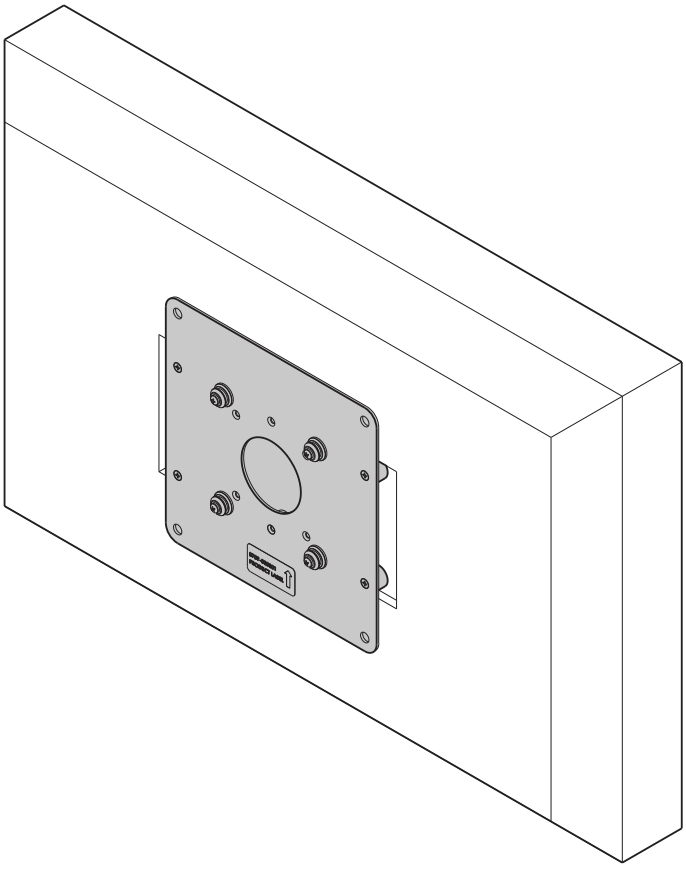

Universal VESA Interface

CHIEF®
Our Mounts. **Your Vision.**

FSB1U

DISCLAIMER

Milestone AV Technologies and its affiliated corporations and subsidiaries (collectively “Milestone”), intend to make this manual accurate and complete. However, Milestone makes no claim that the information contained herein covers all details, conditions or variations, nor does it provide for every possible contingency in connection with the installation or use of this product. The information contained in this document is subject to change without notice or obligation of any kind. Milestone makes no representation of warranty, expressed or implied, regarding the information contained herein. Milestone assumes no responsibility for accuracy, completeness or sufficiency of the information contained in this document.

Chief® is a registered trademark of Milestone AV Technologies. All rights reserved.

DEFINITIONS

MOUNTING SYSTEM: A MOUNTING SYSTEM is the primary Chief product to which an accessory and/or component is attached.

ACCESSORY: AN ACCESSORY is the secondary Chief product which is attached to a primary Chief product, and may have a component attached or setting on it.

COMPONENT: A COMPONENT is an audiovisual item designed to be attached or resting on an accessory or mounting system such as a video camera, CPU, screen, display, projector, etc.

WARNING: A WARNING alerts you to the possibility of serious injury or death if you do not follow the instructions.

CAUTION: A CAUTION alerts you to the possibility of damage or destruction of equipment if you do not follow the corresponding instructions.

IMPORTANT SAFETY INSTRUCTIONS

WARNING: Failure to read, thoroughly understand, and follow all instructions can result in serious personal injury, damage to equipment, or voiding of factory warranty! It is the installer’s responsibility to make sure the accessory is properly assembled and installed using the instructions provided.

WARNING: Failure to provide adequate structural strength for this accessory can result in serious personal injury or damage to equipment! It is the installer’s responsibility to make sure the structure to which this accessory is attached can support five times the combined weight of all equipment. Reinforce the structure as required before installing the accessory.

WARNING: Exceeding the weight capacity can result in serious personal injury or damage to equipment! It is the installer’s responsibility to make sure the combined weight of all components attached to accessory and mounting system does not exceed 45 lbs (20.4 kg).

WARNING: Use this accessory only for its intended use as described in these instructions. Do not use attachments not recommended by the manufacturer.

WARNING: Never operate this accessory if it is damaged. Return the accessory to a service center for examination and repair.

WARNING: Do not use this accessory outdoors.

NOTE: The FSB1U interface bracket is compatible with the following VESA patterns:

- 75 x 75mm
- 100 x 100mm
- 200 x 100mm
- 200 x 200mm

IMPORTANT ! : The FSB1U interface brackets are designed to be mounted to a:

- Listed Chief FSR1U small static wall mount
- Listed Chief FTR1U small tilting wall mount

--SAVE THESE INSTRUCTIONS--

DIMENSIONS

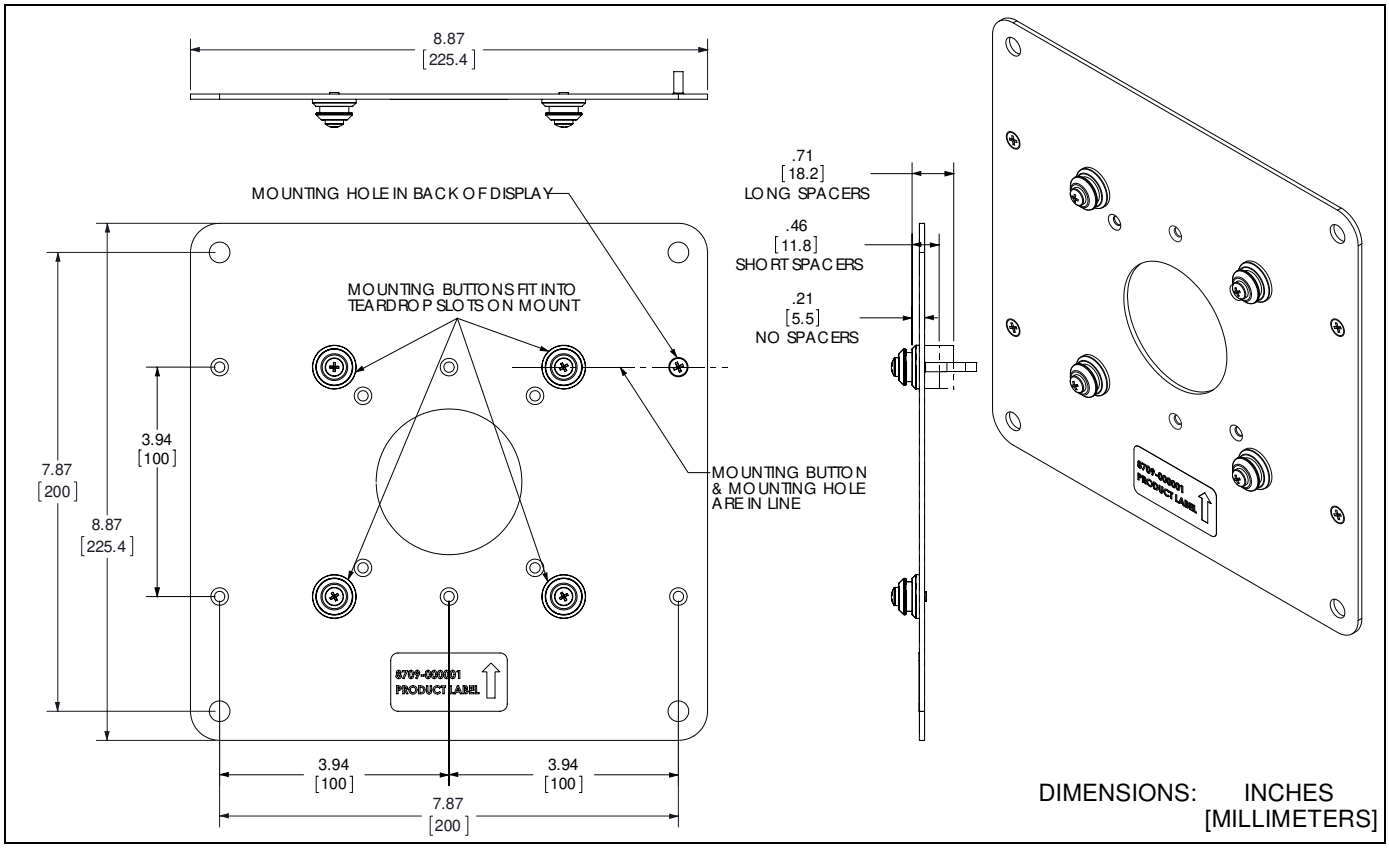

LEGEND

	Tighten Fastener
	Apretar elemento de fijación
	Befestigungsteil festziehen
	Apertar fixador
	Serrare il fissaggio
	Bevestiging vastdraaien
	Serrez les fixations

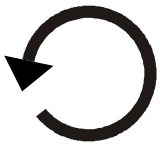	**Loosen Fastener**
	Aflojar elemento de fijación
	Befestigungsteil lösen
	Desapertar fixador
	Allentare il fissaggio
	Bevestiging losdraaien
	Desserrez les fixations

	Phillips Screwdriver
	Destornillador Phillips
	Kreuzschlitzschraubendreher
	Chave de fendas Phillips
	Cacciavite a stella
	Kruiskopschroevendraaier
	Tournevis à pointe cruciforme

TOOLS REQUIRED FOR INSTALLATION

#2

PARTS

FSB1U Hardware Kit (Bag sections labeled A-E)

A (4)
M4 x 12mm

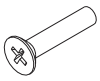

BA (4)
M4 x 25mm

BB (4)
M4 x 12mm

CA (4)
M6 x 12mm

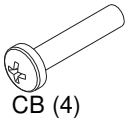

CB (4)
M6 x 25mm

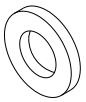

CC (4)
M6

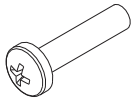

DA (4)
M8 x 25mm

DB (4)
M8 x 12mm

DC (4)
M8

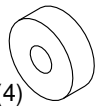

EA (4)
.625 x .328 x .250

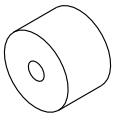

EB (4)
.75 x .187 x .50

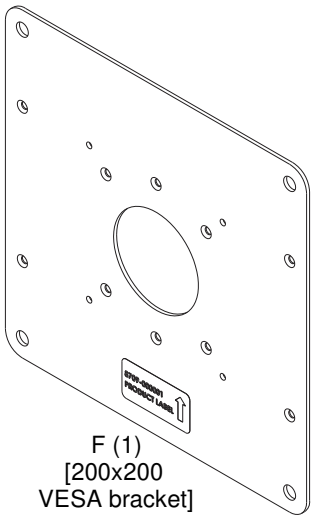

F (1)
[200x200
VESA bracket]

G (4)
[Mounting button]

INSTALLATION

IMPORTANT ! : IMPROPER INSTALLATION CAN LEAD TO DISPLAY FALLING! Use only hardware provided and referenced within these instructions. DO NOT substitute!

INSTALLATION FOR MOUNTS WITH LATCHING FLAGS

1. Assemble four mounting buttons (G) to VESA bracket (F) using four M4 x 12mm Phillips pan head screws (A). (See Figure 1)

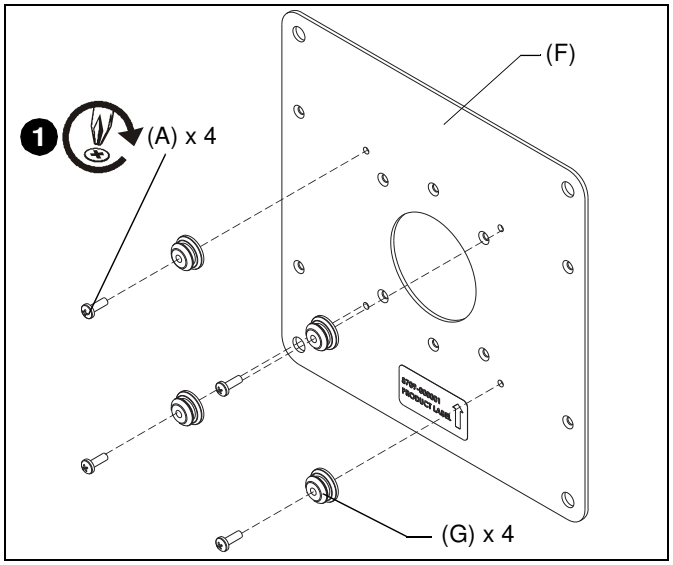

Figure 1

Flush Mount Display Interface Installation

1. Assemble interface bracket assembly (with mounting buttons) to display using four M4 x 12mm Phillips flat head screws (BB). (See Figure 2)

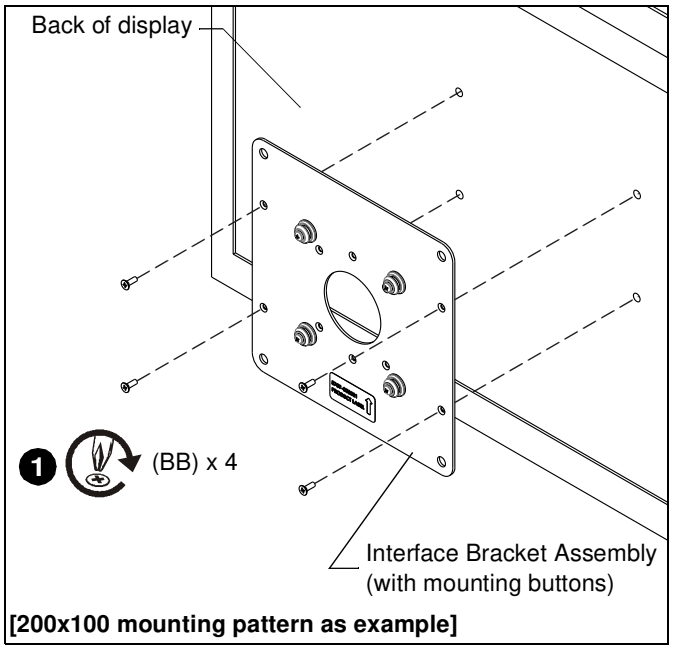

Figure 2

Recessed Mount Display Interface Installation

1. Align and place four spacers (EA or EB) over mounting holes in display back. (See Figure 3)
2. Align and place interface bracket assembly over four spacers (EA or EB). (See Figure 3)
3. Secure interface assembly to display back using four M4 x 25mm (BA) Phillips flat head screws. (See Figure 3)

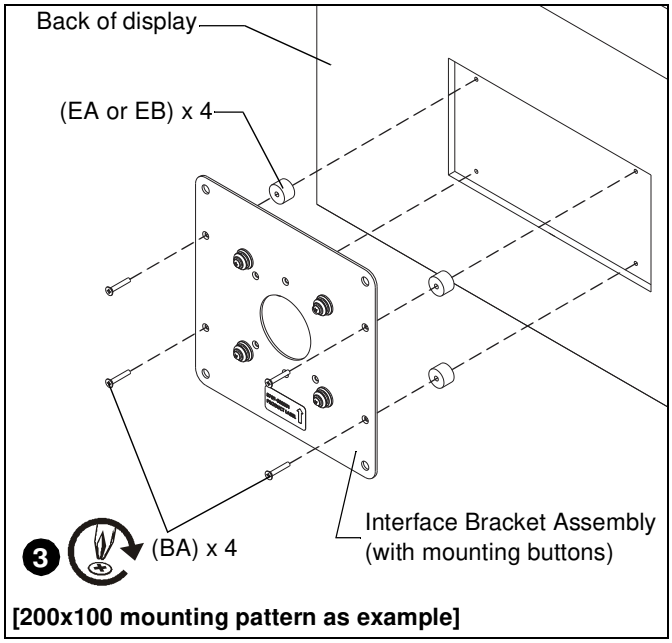

Figure 3

INSTALLATION FOR MOUNTS WITH CENTRIS CUP

CAUTION: IMPROPER INSTALLATION CAN LEAD TO DISPLAY FALLING! Use only hardware provided and referenced within these instructions. DO NOT substitute!

VESA 75mm x 75mm, 100mm x 100mm, 200mm x 100mm or 200mm x 200mm Mounting Pattern

If the display being mounted has a VESA compliant mounting pattern of 75mm x 75mm, 100mm x 100mm, 200mm x 100mm or 200mm x 200mm follow the installation instructions provided with the mount.

VESA Flush Mount Display Installation

1. Place display face down on a clean dry surface.
2. Assemble interface bracket (F) to display using four M4 x 12mm Phillips flat head screws (BB). (See Figure 4)
3. Proceed to **Installing to Mount** section.

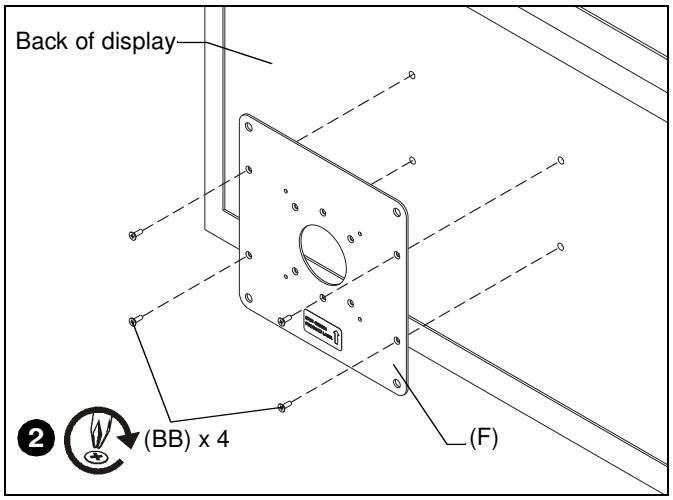

Figure 4

VESA Recessed Mount Display Installation

1. Align and place four spacers (EA or EB) over mounting holes in display back. (See Figure 5)
2. Align and place interface bracket (F) over four spacers (EA or EB). (See Figure 5)
3. Secure interface assembly to display back using four M4 x 25mm Phillips flat head screws (BA). (See Figure 5)

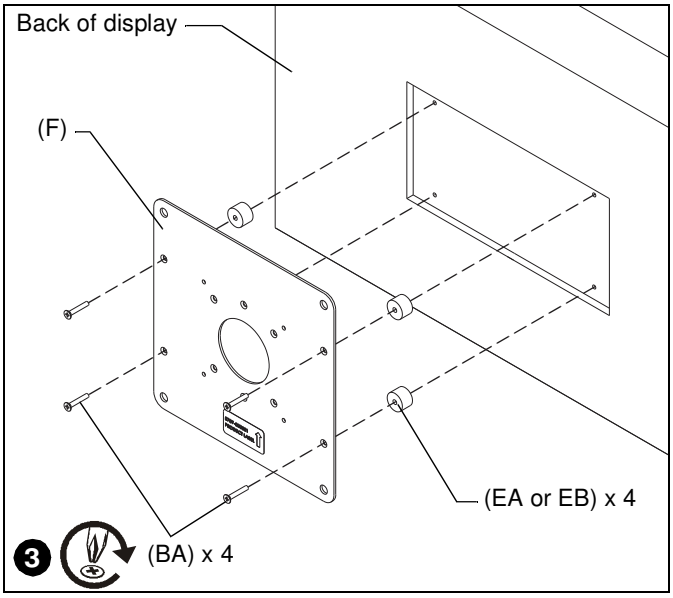

Figure 5

Installing to Mount

WARNING: IMPROPER INSTALLATION CAN LEAD TO DISPLAY FALLING CAUSING SERIOUS PERSONAL INJURY OR DAMAGE TO EQUIPMENT! Using screws of improper size may damage your display. Properly sized screws will easily and completely thread into display mounting holes. If spacers are required, be sure to use longer screws of the same diameter.

1. Select correct screws, spacers (if necessary) and washers (if required) from the FSB1U hardware kit (A-EB) and partially fasten two Phillips pan head upper mounting screws (CA-EB) into interface bracket (F). (See Figure 6)

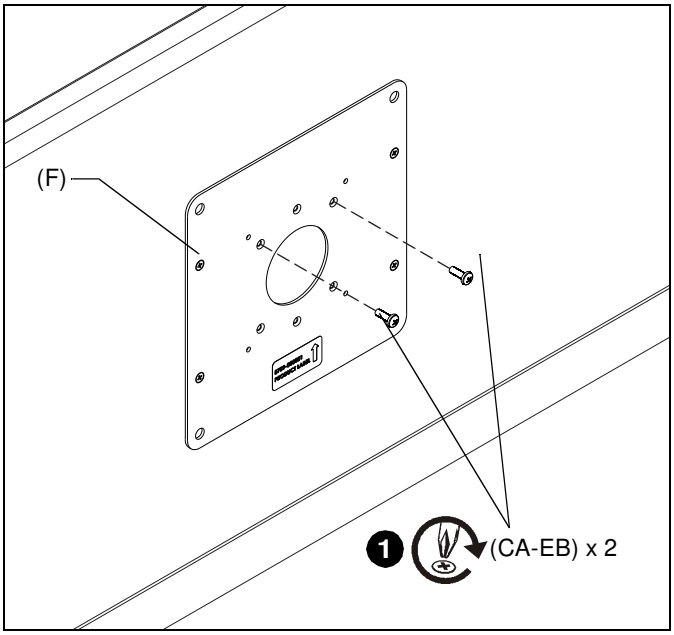

Figure 6

2. Align two mounting screws with upper teardrop mounting holes in Centris head. (See Figure 7)
3. Insert two upper mounting screws into upper teardrop mounting holes in Centris head, and lower display until mounting screws are fully seated in lower area of teardrop mounting holes. (See Figure 7)

NOTE: DO NOT fully tighten mounting screws at this time.

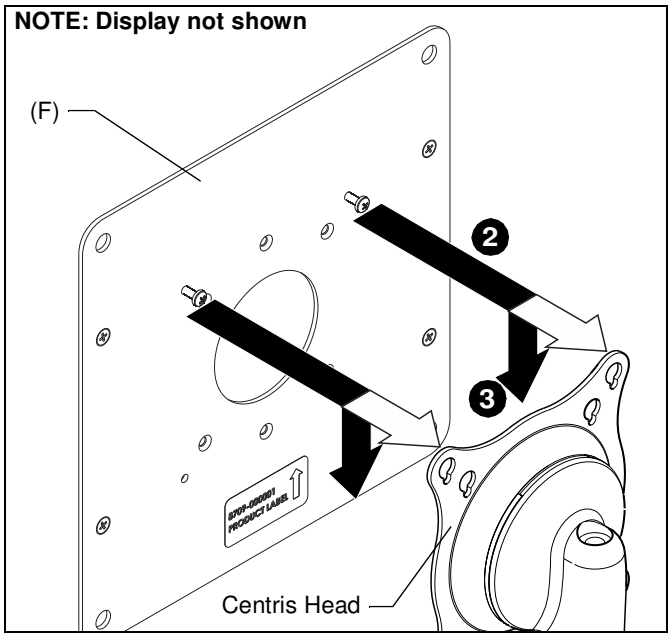

Figure 7

4. Insert two lower mounting screws into lower teardrop mounting holes in Centris head. (See Figure 8)

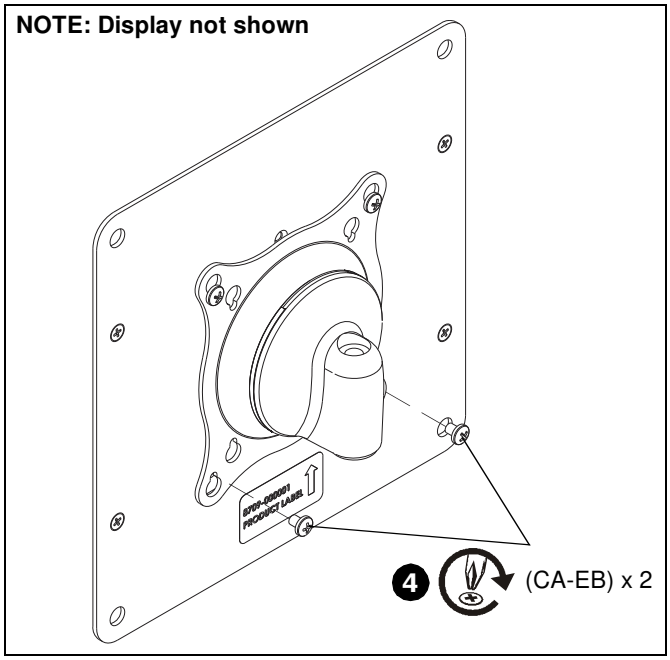

Figure 8

5. Fully tighten four mounting screws.

Our Mounts. **Your Vision.**

Chief, a products division of
Milestone AV Technologies

8800-002878 Rev00
©2016 Milestone AV Technologies
www.milestone.com
12/16

USA/International
A 6436 City West Parkway, Eden Prairie, MN 55344
P 800.582.6480 / 952.225.6000
F 877.894.6918 / 952.894.6918

Europe
A Franklinstraat 14, 6003 DK Weert, Netherlands
P +31 (0) 495 580 852
F +31 (0) 495 580 845

Asia Pacific
A Office No. 918 on 9/F, Shatin Galleria
18-24 Shan Mei Street
Fotan, Shatin, Hong Kong
P 852 2145 4099
F 852 2145 4477

30% POST-CONSUMER CONTENT