User Guide

Quality, Design and Innovation

home.liebherr.com/fridge-manuals

LIEBHERR

Contents

1 Appliance at a glance ... 3
1.1 Scope of delivery ... 3
1.2 Overview of the appliance and equipment ... 3
1.3 Appliance range of use ... 3
1.4 Conformity ... 3
1.5 SVHC substances according to REACH regulation. 4
1.6 EPREL database ... 4
1.7 Spare parts ... 4

2 General safety instructions ... 4

3 Functionality of the display ... 5
3.1 Navigation by touchbutton and symbol explanation ... 5
3.2 Menus ... 5

4 Putting into operation ... 7

4 Installation conditions ... 7
4.1 Location ... 7
4.2 Installing multiple appliances ... 7
4.3 Mains connection ... 7
4.4 Installation dimensions ... 8
4.4 Ventilation requirements ... 8
4.5 Connection dimensions for the power supply ... 8
4.6 Transporting appliance ... 8
4.7 Unpacking the appliance ... 8
4.8 Mounting wall spacers ... 8
4.9 Setting up the appliance ... 8
4.10 After setting up ... 9
4.11 Disposing of packaging ... 9
4.12 Swapping the door hinge side ... 9
4.13 Connecting the appliance to the power supply ... 12
4.14 Switching on device (first use) ... 13

5 Storage ... 13
5.1 Information regarding storage ... 13
5.2 Freezer compartment ... 13
5.3 Storage times ... 14

6 Saving energy ... 14

7 Controls ... 14
7.1 Operating controls and display elements ... 14
7.1.1 Temperature display/Status indicator ... 15
7.1.2 LED behaviour ... 15
7.1.3 Audible signals ... 15
7.2 Appliance functions ... 15
7.2.1 Notes on the appliance functions ... 15
Switching the appliance off and on ... 15
Temperature ... 15
SuperFrost ... 16
SabbathMode ... 16
Input lock ... 17
Start defrosting cycle* ... 17
Demo mode ... 17
Resetting to factory settings ... 18
7.3 Messages ... 18
7.3.1 Ending messages ... 18

8 Features ... 19
8.1 Drawers ... 19
8.2 Glass shelves ... 19
8.3 VarioSpace ... 20

9 Maintenance ... 20
9.1 Disassembling / assembling pull-out systems ... 20
9.2 Defrosting the appliance ... 20
9.3 Cleaning the appliance ... 20

10 Customer help ... 21
10.1 Technical specifications ... 21
10.2 Operating noises ... 21
10.3 Technical fault ... 21
10.4 Customer Service ... 22
10.5 Model plate ... 23

11 Shutting down ... 23

12 Disposal ... 23
12.1 Preparing appliance for disposal ... 23
12.2 Disposing of the appliance in an environmentally friendly manner ... 23

The manufacturer is continually working on the further development of all types and models. Please be aware that we reserve the right to make changes to the shape, equipment and technology.

Symbol	Explanation
	Read instructions Please read the information in these instructions carefully to understand all of the benefits of your new appliance.
	Additional information on the Internet The digital manual with additional information and in other languages can be found via the QR code on the front of the manual or by entering the service number at **home.liebherr.com/fridge-manuals**. The service number can be found on the serial tag: *Fig.* Example illustration
	Check appliance Check all parts for transport damage. If you have any complaints, please contact your agent or customer service.
	Differences These instructions apply to a range of models, so differences are possible. Sections that apply to certain models only are marked with an asterisk (*).
	Instructions and results Instructions are marked with a ▶. Results are marked with a ▷.
	Videos Videos about the appliances are available on the YouTube channels of Liebherr-Hausgeräte.

Open source licences:

The appliance contains software components that use open source licences. Information on the open source

*** Depending on model and options**

licences used can be found here: **home.liebherr.com/open-source-licences**

These operating instructions apply to:

F..	10.. / 14..
FN..	14..
TG	14Ve04 / 14Vd04 / 14Vc04 / 14Vddg04
TGN	14Ve04

Note
If your appliance has an N in its appliance designation, it is a NoFrost appliance.*

1 Appliance at a glance

1.1 Scope of delivery

Check all parts for transport damage. Contact your dealer or customer service in the event of complaints. (see 10.4 Customer Service)

Your new appliance comes with the following parts:
- Standalone appliance
- Features (depending on the model)
- Installation materials (depending on the model)
- “Quick Start Guide”
- Service Brochure

1.2 Overview of the appliance and equipment

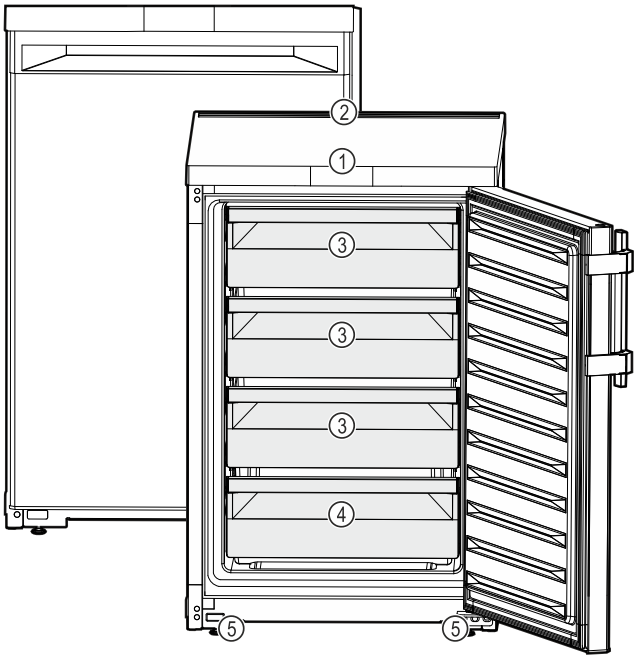

Fig. 1 Example illustration
(1) Controls, lighting
(2) Ventilation slot
(3) VarioSpace
(4) Type plate
(5) Adjustable feet (front)

Note
▶ Shelves, drawers and baskets are arranged for optimum energy efficiency when the appliance is delivered. Changing how the shelves, for example, are inserted in the fridge compartment does not have any impact on energy consumption.

1.3 Appliance range of use

Intended use

The appliance is only suitable for cooling food products in a domestic or household-like environment. This includes, for example, use:
- in staff kitchens, bed and breakfast establishments,
- by guests in country houses, hotels, motels and other accommodation,
- for catering and similar services in the wholesale trade.

The appliance is not suitable as a built-in unit.

All other types of use are not permitted.

Foreseeable misuse

The following applications are expressly forbidden:
- Storing and refrigerating medicines, blood plasma, laboratory preparations or similar substances and products based on the Medical Device Directive 2007/47/EC
- Use in areas at risk of explosions

Misusing the appliance may lead to damage to the goods stored or they may spoil.

Climate classifications

Depending on the climate classification the appliance is designed to operate in restricted ambient temperatures. The climate classification applying to your appliance is printed on the rating plate.

Note
▶ Keep to the specified ambient temperatures in order to guarantee that the appliance works properly.

Climate classification	for ambient temperatures of
SN	10 °C to 32 °C
N	16 °C to 32 °C
ST	16 °C to 38 °C
T	16 °C to 43 °C
SN-ST	10 °C to 38 °C
SN-T	10 °C to 43 °C

The appliance is guaranteed to function properly up to a lower ambient temperature of -15 °C.

1.4 Conformity

The refrigerant circuit has been tested for leaks. The appliance complies with the applicable safety regulations and with the corresponding directives.

The full text of the EU Declaration of Conformity is available on the following website: www.Liebherr.com

1.5 SVHC substances according to REACH regulation

You can check whether your appliance contains SVHC substances according to REACH regulation at the following link: home.liebherr.com/de/deu/de/liebherr-erleben/nachhaltigkeit/umwelt/scip/scip.html

1.6 EPREL database

Details about energy labelling and ecodesign requirements will be available on the European product database (EPREL) from 1st March 2021. You can access the product database at the following link: https://eprel.ec.europa.eu/ You will be asked to enter the model ID. You can find the model ID on the nameplate.

1.7 Spare parts

The spare parts availability for functional parts and stockable parts of the equipment is 15 years.

2 General safety instructions

Please keep these operating instructions in a safe place so you can refer back to them at any time.

If you pass the appliance on, please hand these operating instructions to the next user.

Read these operating instructions carefully before use to ensure safe and correct use of the appliance. Follow the instructions, safety instructions and warning messages included at all times. They are important for ensuring you can operate and install the appliance safely and without any problems.

Danger for the user:

- This device can be used by children and people with impaired physical, sensory or mental abilities or with a lack of experience and knowledge provided that they are supervised or have received instruction in the safe use of this device, and about the resulting hazards.
  Children must not play with this appliance. Cleaning and user maintenance work must not be carried out by children without adult supervision. Children aged between 3 and 8 are allowed to load and unload the appliance. Children below the age of 3 must be kept away from the appliance unless they are under continuous adult supervision.
- The socket must be easily accessible so that the appliance can be disconnected quickly from the electricity in an emergency. It must not be located in the area behind the appliance.
- When disconnecting the appliance from the supply, always take hold of the plug. Do not pull the cable.
- In the event of a fault pull out the mains plug or deactivate the fuse.
- Do not damage the mains power cable. Do not operate the appliance with a defective mains power cable.
- Only customer service or other specially trained staff may repair or perform other operations on the appliance.
- Only assemble, connect and dispose of the appliance according to the instructions.

Fire hazard:

- The coolant used (information on the model plate) is ecofriendly but also flammable. Any leaking coolant may ignite.
  - Do not damage the refrigerant circuit pipes.
  - Do not handle ignition sources inside the appliance.
  - Do not use electrical appliances inside the appliance (e.g. steam cleaners, heaters, ice cream makers, etc.).
  - If the refrigerant leaks: remove any naked flames or ignition sources from the vicinity of the leakage point. Properly air the room. Inform customer services.
- Do not store explosives or sprays using combustible propellants such as butane, propane, pentane, etc. in the appliance. To identify these spray cans, look for the list of contents printed on the can, or a flame symbol. Gases possibly escaping may ignite due to electrical components.
- Keep burning candles, lamps and other items with naked flames away from the appliance so that they do not set the appliance on fire.
- Please be sure to store alcoholic drinks or other packaging containing alcohol in tightly closed containers. Any alcohol that leaks out may be ignited by electrical components.

Danger of tipping and falling:

- Do not misuse the plinth, drawers, doors etc. as a step or for support. This applies particularly to children.

Danger of food poisoning:

- Do not consume food which has been stored too long.

Danger of frostbite, numbness and pain:

- Avoid prolonged skin contact with cold surfaces or refrigerated/frozen goods or take protective measures, e.g wear gloves.

Danger of injury and damage:

- Hot steam can lead to injury. Do not use electrical heating or steam cleaning equipment, open flames or defrosting sprays to defrost.
- Do not use sharp implements to remove the ice.

Risk of crushing:

- Do not hold the hinge when opening and closing the door. Fingers may get caught.

Symbols on the appliance:

This symbol may be located on the compressor. It relates to the oil in the compressor and makes reference to the risk that: Swallowing or inhaling can be fatal. This advice is only relevant to recycling. There is no danger in normal operation.

This symbol is located on the compressor and indicates the danger of flammable materials. Do not remove the sticker.

This or a similar sticker may be located on the rear of the appliance. This sticker indicates that there are vacuum insulation panels (VIP) or perlite panels in the door and/or housing. This advice is only relevant to recycling. Do not remove the sticker.

Please note the warning messages and other specific advice in the other chapters:

	DANGER	indicates an immediately hazardous situation which will lead to death or serious injuries if it is not avoided.
	WARNING	indicates a hazardous situation which may lead to death or serious injuries if it is not avoided.
	CAUTION	indicates a hazardous situation which may lead to minor or moderate injuries if it is not avoided.
	NOTICE	indicates a hazardous situation which may lead to damage to property if it is not avoided.
	Note	indicates useful instructions and tips.

3 Functionality of the display

You operate your device with the touchbutton.

3.1 Navigation by touchbutton and symbol explanation

In the illustrations, different symbols are used to navigate the display by touchbutton. The following table describes these symbols.

Symbol	Description
	Touch the touchbutton with your finger briefly: Navigate through main menu and submenu. If a number is shown on the hand: The number tells you how many times you have to touch the touchbutton briefly in succession to navigate to a particular function.
	Touch the touchbutton with your finger for 3 seconds: Switch on the device. In the main menu: Switch off the device. In the submenu: Switch to the main menu. Deactivate active function of the submenu.
	Touch the touchbutton with your finger for 7 seconds: In the main menu: Open the submenu.
	Arrow with clock: It takes more than 10 seconds for the following message to appear in the display.
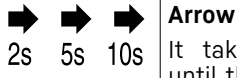	**Arrow with a time indication:** It takes the specified amount of time until the following message appears in the display.

Note
If you touch the touchbutton for **10 seconds**, then you activate the demo mode.
▶ Deactivating demo mode. (see Deactivating demo mode)

3.2 Menus

The device functions can be found in various menus.

Menu	Description
Main menu	When you switch the device on, you are automatically in the main menu. From here, navigate to device functions and the submenu.
Submenu	The submenu contains additional device functions for setting up your device.

3.2.1 Main menu

In the main menu, it is possible to activate/deactivate the following functions:

LED	Description
	Temperature -16 °C

LED	Description
-18°C	Temperature -18 °C
-20°C	Temperature -20 °C
-28°C	Temperature -28 °C
**	SuperFrost

Meaning of the LEDs in the main menu

3.2.1 Opening the submenu

When you switch the device on, you are automatically in the main menu.

If you are in the submenu and want to switch to the main menu:

▶ Carry out action steps (see 3.2.2 Exiting the submenu) .

3.2.1 Navigating in the main menu

If you navigate in the main menu, LED 5 is followed by LED 1 again.

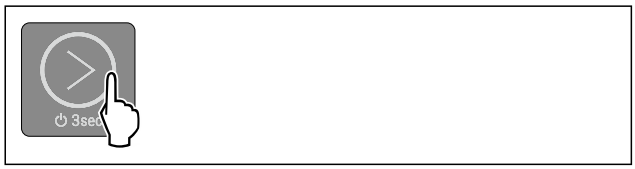

Fig. 2

▶ Touch the touchbutton briefly until the LED of the desired function lights up.

▷ Function is activated.

3.2.1 Sleep mode of the display

If you do not touch the touchbutton in the main menu for 10 seconds, the display switches to sleep mode. Sleep mode prevents you from adjusting the temperature by accidentally touching the touchbutton.

Ending sleep mode:

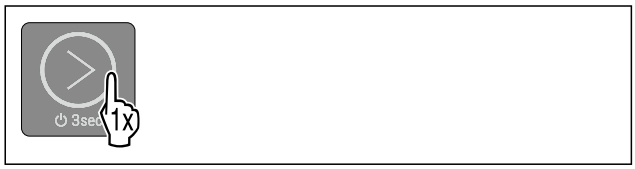

Fig. 3

▶ Briefly touch the touchbutton.

▷ Confirmation tone sounds.

▷ Set temperature flashes once.

▷ Sleep mode is ended.

3.2.2 Submenu

In the submenu, the following functions can be activated/deactivated:

LED	Description
-16°C	Input lock
-18°C	SabbathMode
-20°C	Resetting to factory settings
-28°C *	Start defrosting cycle*

Meaning of the LEDs in the submenu

3.2.2 Opening submenu

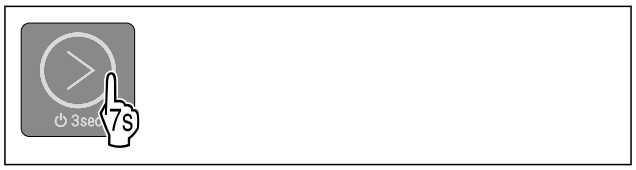

Fig. 4

▶ Carry out the steps as shown in the illustration until you hear a double confirmation tone after 7 seconds.

▷ LEDs 1-5 light up: You are in the submenu.

▷ If you do not perform any action on the display for 5 seconds, the display returns to the main menu.

3.2.2 Exiting the submenu

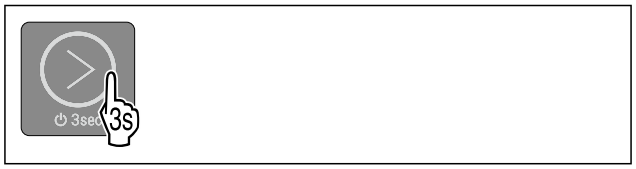

Fig. 5

▶ Carry out action steps according to the illustration.

-or-

▶ Do not touch the touchbutton for 5 seconds.

▷ You are in the main menu.

3.2.2 Navigating in the submenu

If you navigate in the submenu, LED 1 follows the LED of the last function in the submenu.

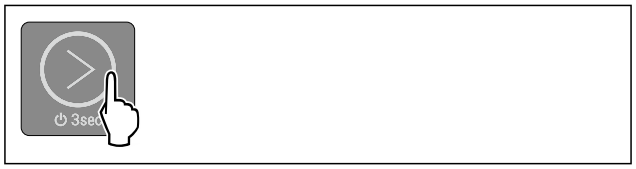

Fig. 6

▶ Touch the touchbutton briefly until the LED of the desired function lights up.

▷ After 5 seconds without interaction, selected function is automatically activated.

*** Depending on model and options**

4 Putting into operation

4 Installation conditions

WARNING
Fire hazard due to dampness!
If live parts or the mains lead become damp this may cause short circuits.
▶ The appliance is designed for use in enclosed areas. Do not operate the appliance outdoors or in areas where it is exposed to splash water or damp conditions.

Intended use
- Install and use the appliance in indoor spaces only.

4.1 Location

WARNING
Leaking coolant and oil!
Fire. The coolant contained in the appliance is eco-friendly, but also flammable. The oil contained in the appliance is flammable. Escaping coolant and oil can ignite if the concentration is high enough and in contact with an external heat source.
▶ Do not damage the pipelines of the coolant circuit and the compressor.

- The best place for installation is a dry and well ventilated room.
- If the appliance is installed in a very humid environment, condensation can build up on the outside of the unit. Always ensure good airlow and ventilation in the installation location.
- The more refrigerant there is in the appliance, the larger the space that it is installed in must be. If the space is too small, any leak may create a flammable mixture of gas and air. For every 8 g of refrigerant, the installation space must be at least 1 m^3 . Information regarding the coolant can be found on the serial tag inside the appliance.

4.1.1 Supporting floor

- The floor of the installation site must be horizontal and even.
- The surface supporting the appliance must be at the same level as the surrounding floor.

4.1.2 Positioning

- Do not place the appliance in direct sunlight or near radiators or similar sources of heat.
- You can place the appliance directly next to an oven.
- If the appliance is placed directly next to an oven, the energy consumption may increase slightly. This is dependent on the service life and usage intensity of the oven.
- Install the appliance with the rear panel up against the wall and always use the supplied wall spacers (see below).

4.2 Installing multiple appliances

The appliances have been developed for different installation methods. If you wish to install several appliances next to each other or on top of each other, ensure that the following requirements are met:

❑ Only install appliances next to or on top of each other if they have been developed for this.
❑ Observe notices and the following table.

NOTICE
Risk of damage due to condensate!
▶ Do not place the appliance directly next to another cooling/refrigeration unit.

NOTICE
Risk of damage due to condensation!
▶ Do not place the appliance directly on top of another cooling/refrigeration unit.

Model	Installation method
All models	Standalone
Models with a model designation starting with **S...**.	Side-by-Side (SBS)
Models without side wall heating	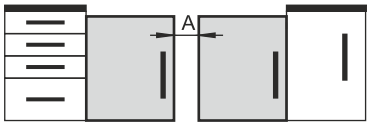 **Next to each other:** Install with gap **A** of 100 mm between the appliances. If you do not comply with this gap, condensation will form on the side walls between the appliances. 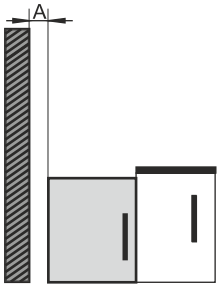 **On an exterior wall:** Install with gap **A** as with installation next to each other. If you do not comply with this gap, condensation may form on the appliance's side wall.

Models and their installation method

4.3 Mains connection

WARNING
Danger of fire due to incorrect positioning!
If the mains cable or plug touches the back of the appliance, the vibration can damage the mains cable or the plug resulting in a short circuit.
▶ Make sure the mains cable is not trapped under the appliance when you position the appliance.
▶ Stand the appliance so that it is not touched by connectors or main cables.
▶ Do not connect any appliances to sockets in the area of the back of the appliance.
▶ Do **not** place and operate multi-sockets/power distributors and other electronic devices (such as halogen transformers) at the back of the appliances.

4.4 Installation dimensions

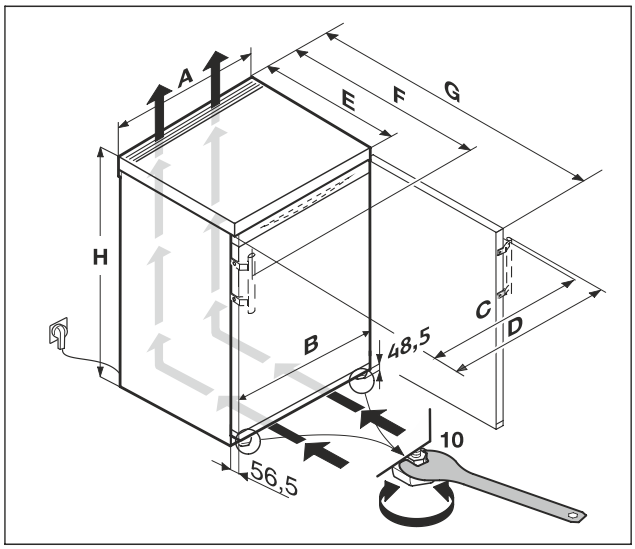

Fig. 7

Dimensions without lever handle (mm):*					
	H	A	C	E	G
F..10..	680	550	547	607[x]	1106[x]
F..14.. / FN..14..	850	550	547	607[x]	1106[x]
TG 14Ve04 TG 14Vd04 TG 14Vc04 TGN 14Ve04	850	550	547	607[x]	1106[x]

Dimensions with lever handle (mm):*							
	H	A	C	D	E	F	G
F..14.. / FN..14..	850	550	545	589	607[x]	648[x]	1112[x]
TG14Vddg04	850	550	545	589	607[x]	648[x]	1112[x]

[x] This dimension increases by 35 mm on appliances with attached wall spacer brackets. (see 4.8 Mounting wall spacers)

4.4 Ventilation requirements

NOTICE
Danger of overheating due to insufficient air ventilation!
The compressor may be damaged if there is insufficient air ventilation.
▶ Take care to ensure adequate air ventilation.
▶ Observe the ventilation requirements.

If the appliance is integrated into a fitted kitchen, the following ventilation requirements must be adhered to:

- As a rule, the larger the ventilation space the more efficiently the appliance can run.

4.5 Connection dimensions for the power supply

The connection to the power supply is on the rear of the appliance. To connect your appliance safely, ensure that the following requirements are met:

❑ Dimensions for the connection to the power supply are known and are adhered to. See table below.
❑ Connection to the power supply according to the instructions. (see 4.13 Connecting the appliance to the power supply)

4.6 Transporting appliance

Note when transporting the appliance:
▶ Transport the appliance upright.
▶ Use two people to transport the appliance.

During first use:
▶ Transport the appliance packaged.

When transporting appliances after initial commissioning (e. g. moving or cleaning):
▶ Empty the appliance.
▶ Secure the door against unintentional opening.

4.7 Unpacking the appliance

Before you connect the appliance, report any damage immediately to the delivery company.

▶ Check the appliance and the packaging for damage during transport. Contact the supplier immediately if you suspect any level of damage.
▶ Remove all materials from the back or the side walls of the appliance that may prevent proper installation or ventilation.
▶ Remove all protective films from the appliance. Do not use sharp or pointed objects for this.

4.8 Mounting wall spacers

With wall spacers, your device achieves the declared energy consumption and no condensation forms in high ambient humidity. The device is fully functional without the spacer brackets, but its energy consumption will be slightly higher.

If you insert the wall spacers, then the device depth increases by approx. 35 mm.

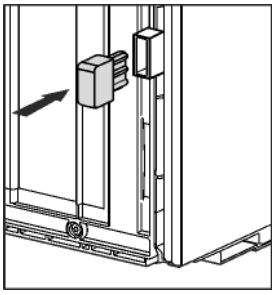

▶ Appliance with enclosed wall spacers: Insert the wall spacers on the rear of the appliance at the bottom left and right.

4.9 Setting up the appliance

CAUTION
Risk of injury due to heavy appliance!
▶ Have two people transport the appliance to its installation site.

* Depending on model and options

WARNING
Risk of fire due to short circuit!
- ▶ When you set the appliance up: do not kink, jam or damage the mains cable.
- ▶ The appliance must not be operated with a defective mains cable.

WARNING
Danger of injury and damage due to the appliance being unstable!
The appliance can topple over.
- ▶ Secure the appliance as described in the instructions.

WARNING
Fire hazard and danger of damage!
- ▶ Do not place appliances emitting heat e.g. microwaves, toasters etc. on the appliance!

Ensure that the following conditions are met:
- ❑ Only move the device when it is not loaded.
- ❑ Only install the appliance with help.

- ▶ Remove the mains cable from the package.
- ▶ Plug the mains cable's IEC socket completely into the appliance plug on the back of the appliance. Ensure that the IEC socket is tight.
- ▶ Use a cord to lay the mains plug to a freely accessible socket if required.

4.10 After setting up

- ▶ Take off the protective film from the exterior of the appliance.
- ▶ Take off the protective film from the trim panels and drawer fronts.
- ▶ Remove all transport safety components.
- ▶ Clean the device. (see 9.3 Cleaning the appliance)
- ▶ Note the type (model, number), appliance designation, appliance/serial number, purchase date and dealer's address.

4.11 Disposing of packaging

WARNING
Danger of suffocation due to packing material and plastic film!
- ▶ Do not allow children to play with packing material.

The packaging is made of recyclable materials:
- corrugated board/cardboard
- expanded polystyrene parts
- polythene bags and sheets
- polypropylene straps
- nailed wooden frame with polyethylene panel*

- ▶ Take the packaging material to an official collecting point.

4.12 Swapping the door hinge side

Tool

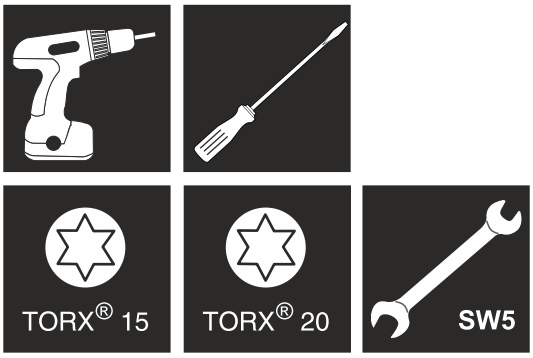

Fig. 8

WARNING
Danger of injury due to door falling out!
If the bearing parts are not screwed on tightly enough, the door may fall out. This can result in serious injuries. In addition, the door may not close with the result that the appliance does not cool properly.
- ▶ Screw on the bearing brackets/bearing pins tightly with 4 Nm.
- ▶ Check all screws and retighten them if necessary.

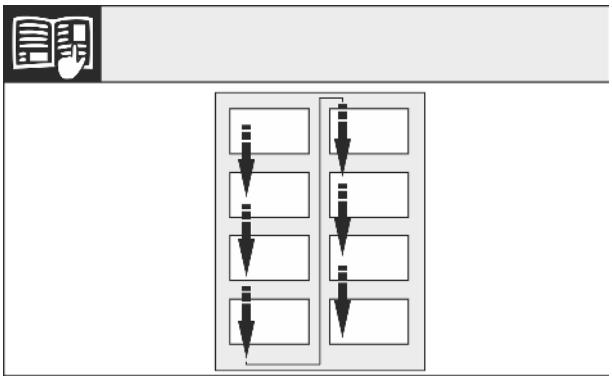

Fig. 9

Note the direction of reading.

4.12.1 Preparation

- ▶ Tilt the device backwards with two persons.

4.12.2 Loosen the lower bearing components

CAUTION
Risk of injury if the door tips!
- ▶ Take good hold of the door.
- ▶ Set down the door carefully.

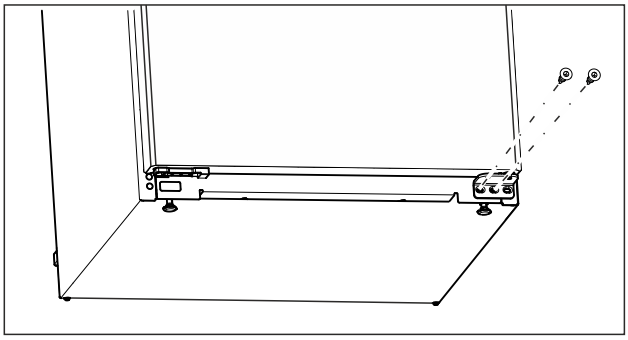

Fig. 10

- ▶ Unscrew the middle screw on the lower swap bearing block with a Torx 20 screwdriver. (see Fig. 10)

▶ Unscrew the inner screw on the lower swap bearing block with a Torx 20 screwdriver. (see Fig. 10)
▶ Put the screws aside.

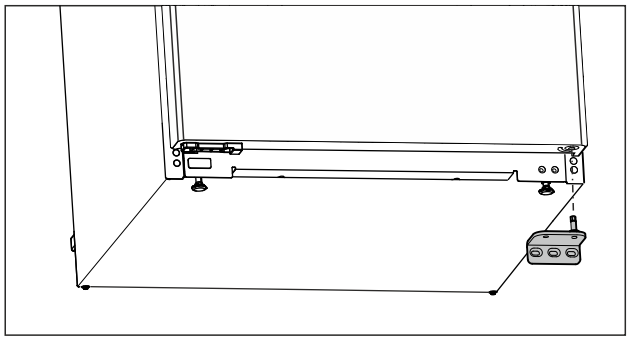

Fig. 11

▶ Remove the swap bearing block downwards. (see Fig. 11)
▶ Set the swap bearing block aside.

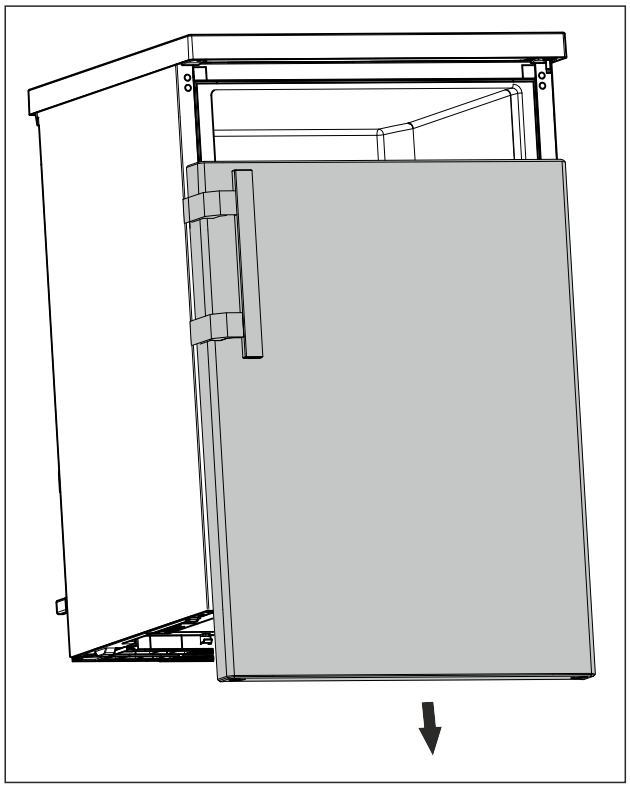

Fig. 12

▶ Remove the door downwards. (see Fig. 12)
▶ Set down the door.

4.12.3 Preparing the door

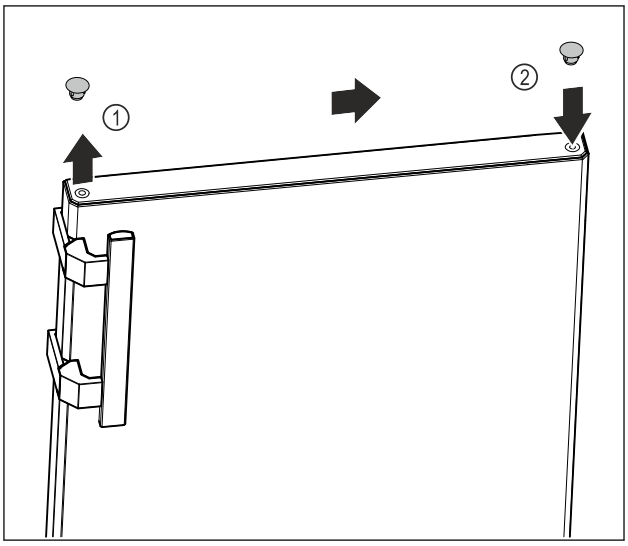

Fig. 13

▶ Carefully lift the cover plug on the top of the door *Fig. 13 (1)* with a slotted screwdriver.
▶ Insert the cover plug on the opposite side. *Fig. 13 (2)*

*** Depending on model and options**

4.12.4 Re-locating the handle*

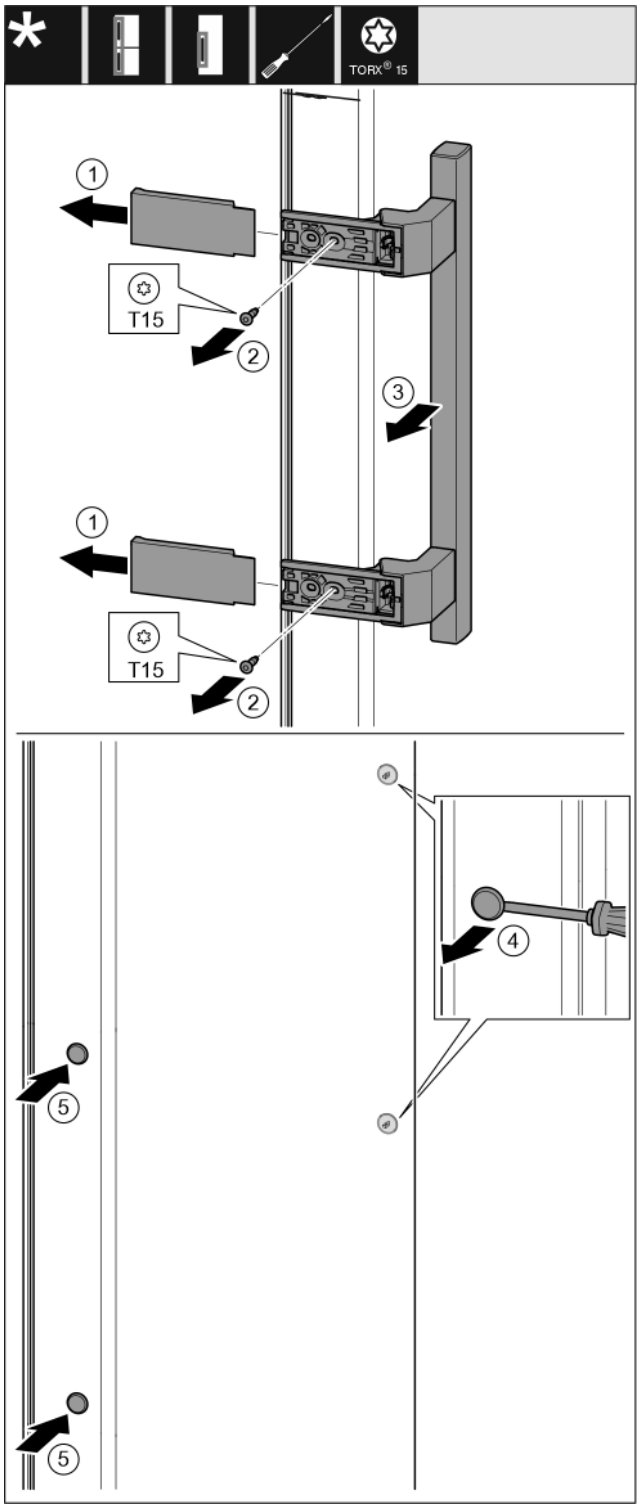

Fig. 14

- ▶ Pull off the cover. *Fig. 14 (1)*
- ▶ Unscrew the screws with a Torx 15 screwdriver. *Fig. 14 (2)*
- ▶ Take off the handle. *Fig. 14 (3)*
- ▶ Carefully lift the side plug with a slotted screwdriver and pull it out. *Fig. 14 (4)*
- ▶ Replace the plug on the other side. *Fig. 14 (5)*

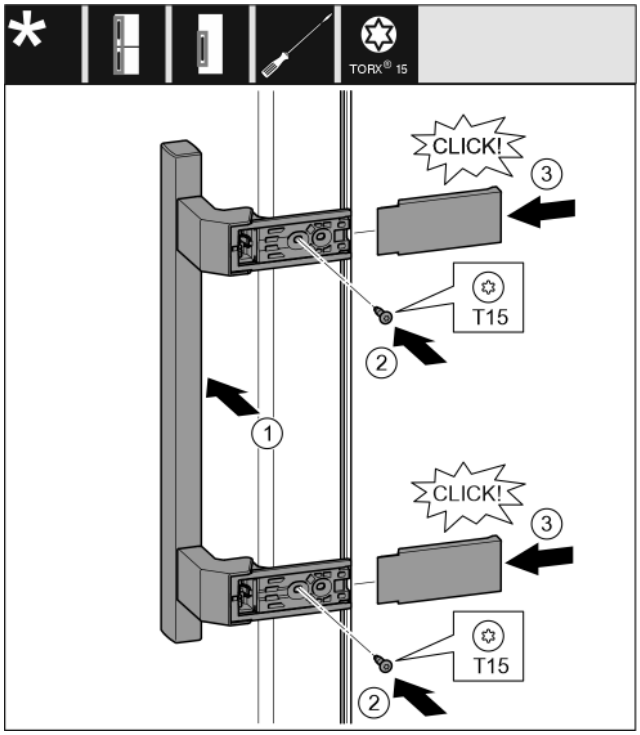

Fig. 15

- ▶ Attach the handle on the opposite side. *Fig. 15 (1)*
- ▷ The screw holes must be exactly on top of each other.
- ▶ Tighten screws with screwdriver T15. *Fig. 15 (2)*
- ▶ Place the covers on the side and push them on. *Fig. 15 (3)*
- ▷ Ensure that they latch into place.

4.12.5 Relocating the bearing components

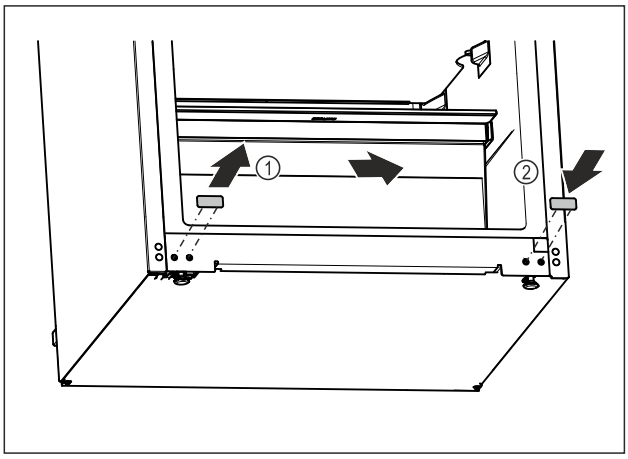

Fig. 16

- ▶ Carefully lift the cover plug at the bottom of the device with a slotted screwdriver.
- ▶ Pull out the cover plug. *Fig. 16 (1)*
- ▶ Insert the cover plug on the opposite side. *Fig. 16 (2)*

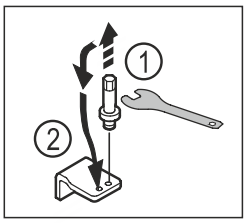

Fig. 17

- ▶ Unscrew the bolt of the lower swap bearing block with an Allen key AF5. *Fig. 17 (1)*
- ▶ Insert the bolt on the opposite side. *Fig. 17 (2)*
- ▶ Tighten the bolt with an Allen key AF5.

4.12.6 Relocating the upper bearing components

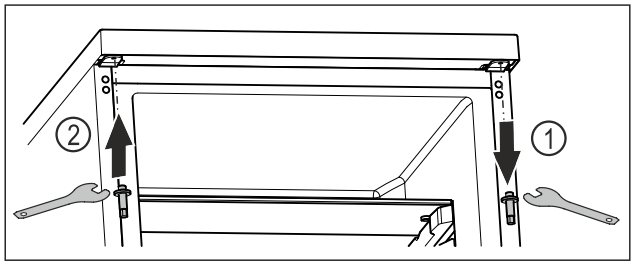

Fig. 18

▶ Unscrew the upper bolt with an Allen key. *Fig. 18 (1)*
▶ Tighten the bolt on the opposite side with an Allen key. *Fig. 18 (2)*

4.12.7 Fitting the door

WARNING

Danger of injury due to door falling out!
If the bearing parts are not screwed on tightly enough, the door may fall out. This can result in serious injuries. In addition, the door may not close with the result that the appliance does not cool properly.

▶ Screw the bearing brackets on firmly with 4 Nm.
▶ Check all screws and retighten them if necessary.

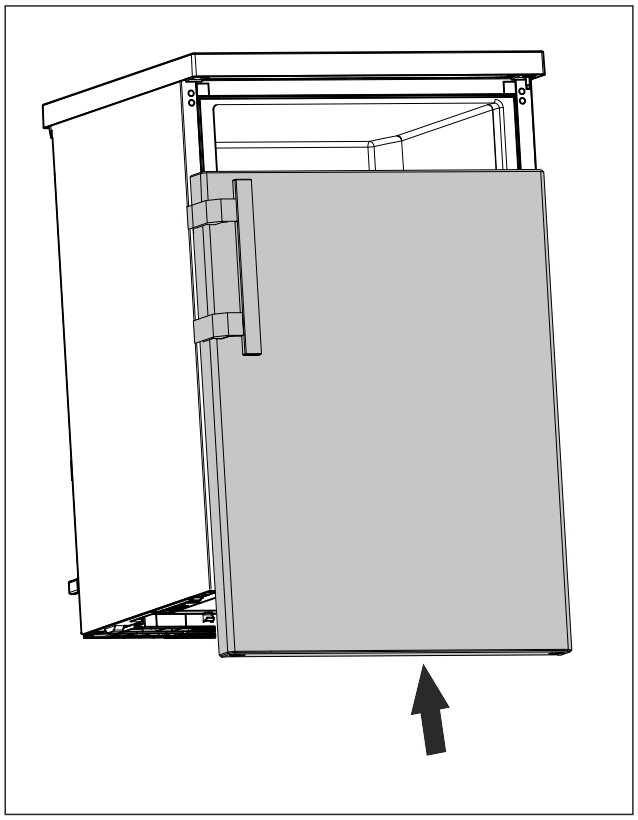

Fig. 19

▶ Slide the door onto the upper bolt in closed status. (see Fig. 19)

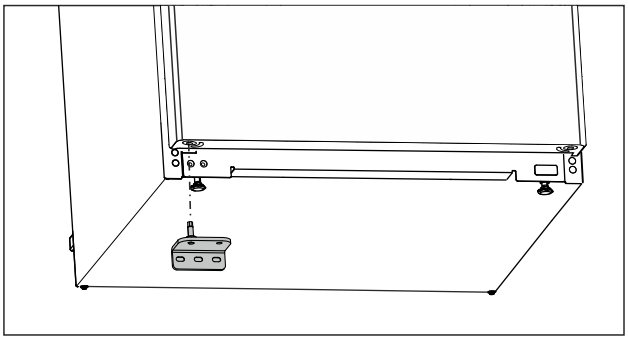

Fig. 20

▶ Insert the lower swap bearing block on the opposite side. (see Fig. 20)

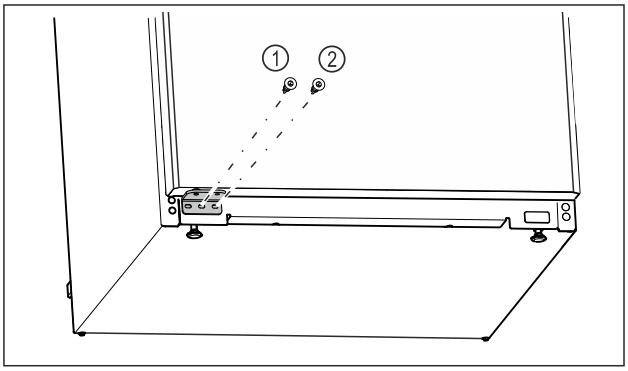

Fig. 21

▶ Tighten the middle screw of the swap bearing block *Fig. 21 (1)* with a Torx 20 screwdriver.
▶ Tighten the inner screw of the swap bearing block *Fig. 21 (2)* with a Torx 20 screwdriver.
▶ Check the door.
▷ The door hinge has been changed.

4.13 Connecting the appliance to the power supply

WARNING

Danger of electric shock and injury due to damaged appliance or damaged mains cable!
Danger of cuts and fatal injuries. If the appliance or the mains cable is damaged during transport, you may be electrocuted. You could also cut yourself on damaged parts of the appliance housing.

▶ Check the appliance and the mains cable for damage after transport.
▶ Never put the appliance into operation if the appliance or the mains cable are damaged.
▶ Contact Customer Service.

You can connect your appliance to the mains using the power cable supplied separately. The mains power cable has an appliance coupler at one end and a mains plug at the other end.

Make sure that the following requirements are fulfilled:

- The appliance and power cable are undamaged.
- The appliance is set up in accordance with the regulations. (see 4.8 Mounting wall spacers)
- Requirements for the electrical connection are met. (see 4 Installation conditions)
- Dimensions for connection in accordance with regulations are known and observed. (see 4.5 Connection dimensions for the power supply)
- Mains voltage and frequency correspond to the specifications on the type plate.

- The socket is earthed according to the regulations and fused.
- The fuse tripping current is between 10 A and 16 A.
- The socket is easily accessible and is not behind the appliance. (see 4.5 Connection dimensions for the power supply)

NOTICE
Danger of damage to incorrect operation!
Damage to the electrical components of the appliance.
▶ Only use the supplied mains cable.

WARNING
Danger of fire due to incorrect connection!
Burns.
Damage to the appliance.
▶ Do not use an extension cable.
▶ Do not use distributor blocks.

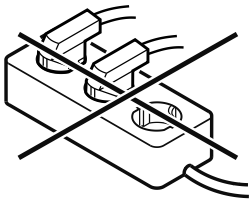

NOTICE
Danger of damage to incorrect connection!
Damage to the appliance.
▶ Do not connect the appliance to a stand-alone inverter, e.g. solar power systems and petrol generators.

▶ Connect the mains cable plug to the power supply. Ensure that the plug is tightly in the socket.
▷ The appliance is connected. For information regarding first use, see the following section or the operating instructions.

4.14 Switching on device (first use)

Make sure that the following requirements are fulfilled:

❑ The device has been installed and connected in accordance with the installation instructions.
❑ All adhesive strips, adhesive and protective films and transport locks are removed from inside and on the device.
❑ All marketing leaflets are removed from the drawers.
❑ You are familiar with the functionality of the display. (see 3 Functionality of the display)

Switching on the device:

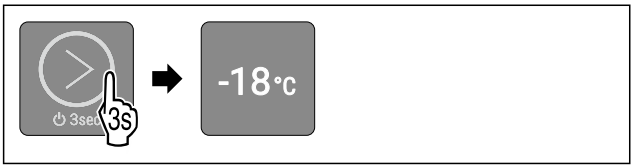

Fig. 22

▶ Touch the touchbutton as shown in the illustration for 3 seconds until you hear the confirmation tone.
▷ The device is switched on.
▷ Interior lighting is activated.
▷ LED 2 lights up: Temperature is set to -18 °C at the factory.
▷ The device cools to the target temperature set at the factory.

Device starts in demo mode:
When the device starts in demo mode:
▶ Deactivating demo mode. (see Deactivating demo mode)

Display switches to sleep mode:
When the display switches to sleep mode:
▶ Briefly touch the touchbutton. (see 3.2.1 Sleep mode of the display)

Note
The manufacturer recommends:
▶ **Store frozen foods** at -18 °C or colder.
▶ Observe the notes on storing food. (see 5.1 Information regarding storage)

Note
Accessories can be purchased from the Liebherr-Hausgeräte store at home.liebherr.com/shop/de/deu/zubehor.html.

5 Storage

5.1 Information regarding storage

WARNING
Risk of fire
▶ Do not use any electrical appliances in the food area of the appliance unless recommended by the manufacturer.

Note
The energy consumption increases and the cooling power goes down if ventilation is not sufficient.
▶ Always keep air slots clear.

Observe the following specifications for storage:

- Package food properly.
- Package raw meat or fish in clean, closed containers. This will prevent meat or fish from touching or dripping onto other food.
- Leave space between goods to ensure good air circulation.
- Store food according to the instructions on the packaging.
- Always observe the best-before date indicated on the packaging.

Note
Failure to follow these guidelines can lead to foodstuffs spoiling.

5.2 Freezer compartment

Here, a dry, frosty storage climate is created at -18 °C. The frosty storage climate is suitable for storing frozen food for several months, for making ice cubes or freezing fresh food.

5.2.1 Freezing food

Freezing quantity

The maximum amount of fresh food that you can freeze within 24 hours is specified on the type plate (see 10.5 Model plate) under “Freezing capacity ... kg/24h”.

To ensure that food quickly freezes through, adhere to the following quantities per package:

- Fruit and vegetables up to 1 kg
- Meat up to 2.5 kg

Freezing food using SuperFrost

Depending on the quantity to be frozen, you can activate SuperFrost before freezing in order to achieve lower freezing temperatures. (see SuperFrost)

Appliance without NoFrost:*

▶ Activate SuperFrost if the amount of food you have to freeze is more than approx. 1 kg.*

Appliance with NoFrost:*

▶ Activate SuperFrost if the amount of food you have to freeze is more than approx. 2 kg.*

The time at which you activate SuperFrost depends on the amount of food you have to freeze:

Freezing quantity	Time at which you should activate SuperFrost
Small amount of food to freeze	Activate SuperFrost about 6 hours before freezing. You can place the food in the freezer as soon as the appliance automatically deactivates SuperFrost.
Maximum amount of food to freeze	Activate SuperFrost about 24 hours before freezing. You can place the food in the freezer as soon as the appliance automatically deactivates SuperFrost.

Arranging your food properly

CAUTION

Risk of injury due to broken glass!

Bottles and cans containing drinks may burst when being frozen. This applies particularly to sparkling drinks.

▶ Do not freeze bottles and cans containing drinks!

Arranging your food properly
On devices with NoFrost:* Place packaged food in the top drawer.* If possible, place food in the front of the drawer.*
On devices without NoFrost:* Place packaged food in the bottom drawer.*

5.2.2 Defrosting food

WARNING

Risk of food poisoning!

▶ Do not re-freeze thawed food.

▶ Use defrosted foodstuff as soon as possible.

You can defrost food in several ways:

- In a fridge
- In the microwave
- In the oven/fan-assisted oven
- At room temperature

▶ Take out only as much food as necessary.

5.3 Storage times

Refer to the specified storage times as a guide.

In the case of foods with a minimum shelf life, the date indicated on the packaging still applies.

Recommended storage period for various types of food		
Ice cream	at -18 °C	2 to 6 months
Sausages, ham	at -18 °C	2 to 3 months
Bread, baked goods	at -18 °C	2 to 6 months
Game, pork	at -18 °C	6 to 9 months
Fatty fish	at -18 °C	2 to 6 months
Lean fish	at -18 °C	6 to 8 months
Cheese	at -18 °C	2 to 6 months
Poultry, beef	at -18 °C	6 to 12 months
Vegetables, fruit	at -18 °C	6 to 12 months

6 Saving energy

- Pay attention to good ventilation. Do not cover ventilation holes or grids.
- Do not place the appliance in direct sunlight or near radiators or similar sources of heat.
- If the appliance is placed directly next to an oven, the energy consumption may increase slightly. This is dependent on the service life and usage intensity of the oven.
- Energy consumption depends on the installation conditions, e.g. the ambient temperature (see 1.3 Appliance range of use) . A warmer ambient temperature can increase the energy consumption.
- Open the appliance for as short a time as possible.
- The lower the temperature is set the higher the energy consumption.
- Keep all food properly packed and covered. This prevents frost from forming.
- Inserting warm food: allow to cool down to room temperature first.
- If there is a thick layer of frost in the appliance: defrost the appliance.*

Dust deposits increase energy consumption:

- For refrigerators with heat exchangers dust the metal grid on the back of the appliance once a year.

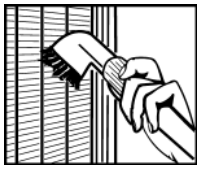

7 Controls

7.1 Operating controls and display elements

The display provides a quick overview of the current status of the appliance, the temperature setting, the status of functions and messages.

You operate your appliance with the touchbutton.

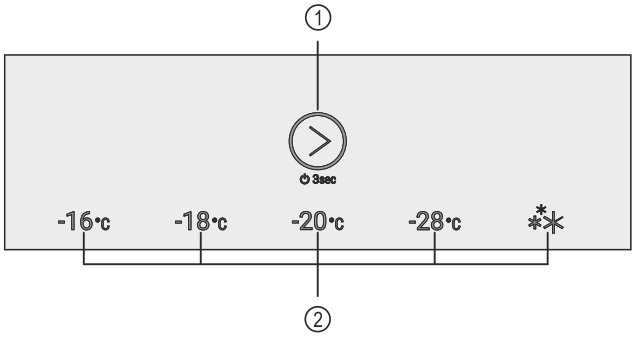

Fig. 23 Operating controls and display elements

(1) Touchbutton (operating control)

(2) Temperature display/ Status indicator

7.1.1 Temperature display/Status indicator

The temperature display/status indicator consists of five LEDs:

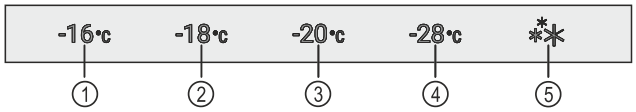

Fig. 24 Temperature display/Status indicator

(1) LED 1
(2) LED 2
(3) LED 3
(4) LED 4
(5) LED 5

The LEDs indicate temperature settings (see 3.2.1 Main menu) in the main menu and functions in the submenu (see 3.2.2 Submenu) .

7.1.2 LED behaviour

You can recognise the status of the device by the light up or flashing of the LEDs:

LED behaviour (example illustration)	Description
-18°C	**LED does not light up:** LED is not selected. Function is not active.
-18°C	**LED lights up:** LED is selected or function is active.
-18°C	**LED of the temperature display/ status indicator flashes:** LED flashes after a power failure or temperature alarm until set temperature is reached. **Several LEDs flash simultaneously:** An error has occurred. (see 7.3 Messages)

LED behaviour

7.1.3 Audible signals

An audible signal sounds in the following cases:

Audible signal	Description
Confirmation tone	Sounds when the touchbutton is touched.
Alarm tone	Sounds when an error occurs. (see 7.3 Messages)
Error tone	Sounds when the touchbutton is touched, but the interaction is not possible.

7.2 Appliance functions

7.2.1 Notes on the appliance functions

The appliance functions are set at the factory so that your appliance is fully functional.

Before you alter, activate or deactivate the device functions, make sure that the following requirements are met:

- ❑ You have read and understood the descriptions of how the display works. (see 3 Functionality of the display)
- ❑ You have familiarised yourself with the operating and display elements of your appliance. (see 7.1 Operating controls and display elements)

Switching the appliance off and on

Use this function to switch the entire appliance off and on.

Switching off the device

When you switch the appliance off, then the previously saved settings are saved.

Make sure that the following requirements are fulfilled:

- ❑ Handling instructions (see 11 Shutting down) are carried out.
- ❑ You are in the main menu. (see 3.2.2 Exiting the submenu)

Fig. 25

▶ Carry out the action steps according to the illustration until you hear the confirmation tone.
▷ LEDs of the display no longer light up.
▷ Interior lighting is deactivated.
▷ Device is switched off.

Switching on the device

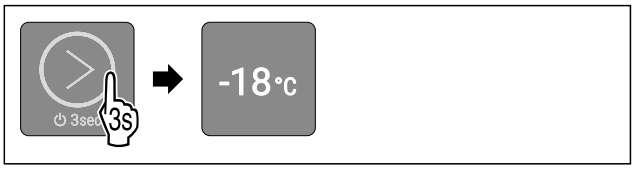

Fig. 26 Example illustration depending on the previously set temperature

▶ Carry out the action steps according to the illustration until you hear the confirmation tone.
▷ The device is switched on.
▷ Interior lighting is activated.
▷ During first use: Temperature is set to -18 °C at the factory.
▷ If the device has been in operation before: Previously set temperature is set.
▷ The device cools to the target temperature set.

Temperature

Use this function to set the temperature.

The temperature depends on the following factors:

- Frequency of door opening
- Duration of door opening
- Room temperature of the installation site
- Type, temperature and quantity of food

Recommended setting: -18 °C

Setting the temperature

The function is located in the main menu on the positions of LEDs 1-4.

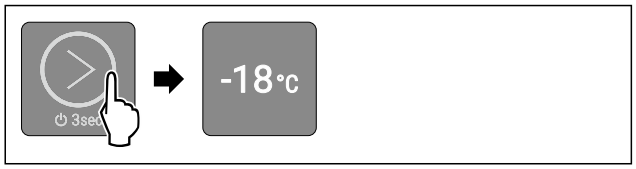

Fig. 27 Example illustration

▶ Briefly touch the touchbutton as shown until the desired temperature lights up.
▷ Temperature is set.
▷ The device cools to the target temperature set.

SuperFrost

You can use this function to activate or deactivate SuperFrost. If SuperFrost is activated, then the appliance increases the freezing capacity. It allows you to achieve lower freezing temperatures.

Application:

- Quickly freeze fresh food through to the core.
  This ensures that the nutrition, appearance and taste of frozen food is maintained.
- Increase the cold reserve in stored frozen food before defrosting the device.

Activating SuperFrost

The function is located in the main menu at the position of LED 5.

Make sure that the following requirements are fulfilled:

❑ Freezing quantity and time for activation of SuperFrost are taken into account. (see Freezing food using SuperFrost)

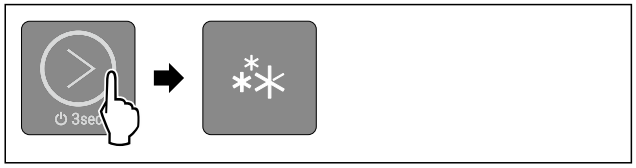

Fig. 28

▶ Briefly touch the touchbutton as shown until LED 5 lights up.
▷ LED 5 lights up: SuperFrost is activated.
▷ The device cools to the target temperature.

Deactivating SuperFrost

SuperFrost is automatically deactivated after 56 to 72 hours. However, you can also deactivate SuperFrost manually at any time by setting a temperature:

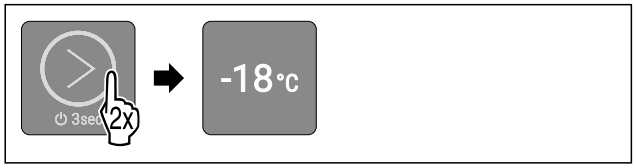

Fig. 29 Example illustration

▶ Briefly touch the touchbutton as shown until the desired temperature lights up.
▷ Temperature is set and SuperFrost is deactivated.
▷ The appliance continues to run in normal mode.
▷ The device cools to the target temperature set.

SabbathMode

With this function you activate or deactivate the SabbathMode. If you activate this function, some electronic functions are switched off. As a result, your device meets the religious requirements for Jewish holidays such as Sabbath and complies with STAR-K Kosher certification.

Device status when SabbathMode is active
LEDs 1-5 light up.
All functions in the display are locked except for the **Deactivating SabbathMode function**.
Active functions remain active.
The interior lighting is deactivated.
Messages are not displayed.
There is no door alarm.
There is no temperature alarm.
The defrosting cycle operates only for the specified time, without consideration to the device consumption.
After a power failure, the device returns to SabbathMode.

Device status

Note
This appliance has certification from the "Institute for Science and Halacha". (www.machonhalacha.co.il)

You can find a list of STAR-K-certified appliances at www.star-k.org/appliances.

Activating SabbathMode

WARNING
Danger of food poisoning from spoiled food!
If you have SabbathMode activated and a power failure occurs, no message appears in the status display about the power failure. Once the power is restored, the appliance continues to operate in SabbathMode. The power failure may mean that food spoils and the consumption of this food could lead to food poisoning.
After a power failure:
▶ Do not consume food that was frozen and has thawed out.

The function is located in the submenu at the position of LED 2.

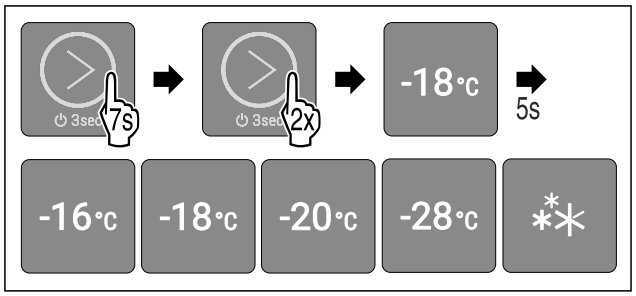

Fig. 30

▶ Carry out action steps according to the illustration.
▷ LED 2 lights up.
▷ After 5 seconds without interaction, SabbathMode is activated. LEDs 1-5 light up.

Deactivating SabbathMode

The SabbathMode is automatically deactivated after 80 hours. However, you can also deactivate SabbathMode manually at any time:

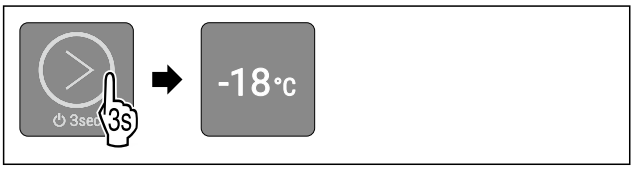

Fig. 31 Example illustration depending on the previously set temperature

▶ Carry out the action steps according to the illustration until you hear the confirmation tone.
▷ SabbathMode is deactivated.
▷ Interior lighting is activated.
▷ The device continues to run in normal mode. LED of the previously set temperature lights up.
▷ You are in the main menu.

Input lock

You can use this function to activate or deactivate the input lock. The input lock prevents the appliance being operated accidentally, e. g. by children.

Application:

- Avoid unintentional modification of functions.
- Avoid unintentional switching off of the device.
- Avoid unintentional temperature setting.

Activating the input lock

The function is located in the submenu at the position of LED 1.

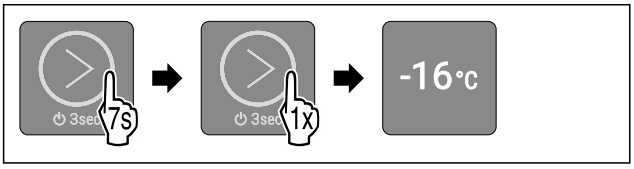

Fig. 32

▶ Carry out action steps according to the illustration.
▷ LED 1 lights up.
▷ After 5 seconds without interaction, input lock is automatically activated.

Deactivating the input lock

Fig. 33

▶ Carry out the action steps according to the illustration until you hear the confirmation tone.
▷ Input lock is deactivated.
▷ You are in the main menu.

Start defrosting cycle*

Use this function to start the automatic defrosting cycle manually if it does not start automatically in the event of a fault.

This function applies to NoFrost devices.*

Starting defrosting cycle

The function is located in the submenu at the position of LED 4.

When you start the defrosting cycle, all functions except the **Cancelling defrosting cycle function** are disabled during the defrosting process.

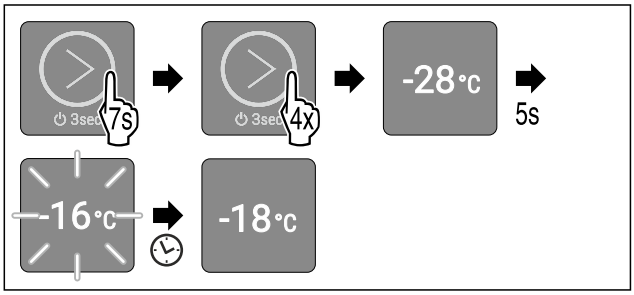

Fig. 34 Example illustration depending on the previously set temperature

▶ Carry out action steps according to the illustration.
▷ LED 4 lights up.
▷ After 5 seconds without interaction, the defrosting cycle starts. LED 1 flashes until defrosting cycle is automatically completed.
▷ When defrosting cycle is finished: The device continues to run in normal mode. LED of the previously set temperature lights up.
▷ You are in the main menu.

Cancelling defrosting cycle

The defrosting cycle will be stopped automatically. However, you can also cancel the defrosting cycle at any time during the defrosting process:

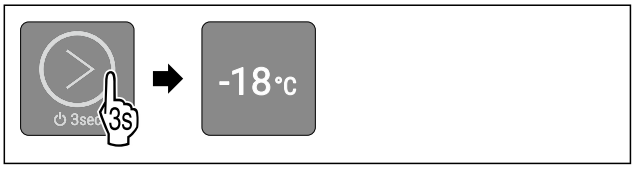

Fig. 35 Example illustration depending on the previously set temperature

▶ Carry out the action steps according to the illustration until you hear the confirmation tone.
▷ Defrosting cycle is cancelled.
▷ The device continues to run in normal mode. LED of the previously set temperature lights up.
▷ You are in the main menu.

Demo mode

Demo mode is a special feature for dealers who want to demonstrate device features. If you activate demo mode, all refrigeration functions are deactivated and you cannot open the submenu.

If you activate and then deactivate demo mode, the device will be reset to factory defaults. (see Resetting to factory settings)

Activating demo mode

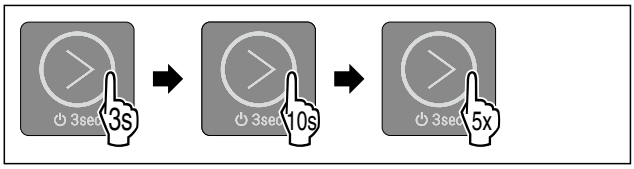

Fig. 36

▶ Touch the touchbutton as shown in the illustration for 3 seconds until you hear the confirmation tone.
▷ Device is switched off.

▶ Touch the touchbutton as shown in the illustration for 10 seconds until you hear the confirmation tone after 10 seconds.
▶ Briefly touch the touchbutton five times.
▷ All temperature LEDs light up twice for a short time: Demo mode is activated.
▷ Device is switched off.
▶ Switch on the device. (see Switching on the device)
▷ The device is in demo mode.

Deactivating demo mode

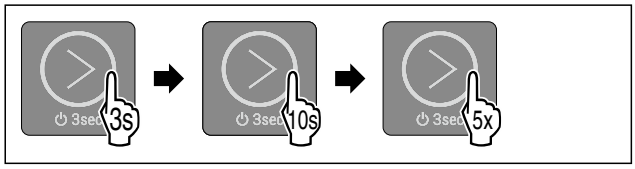

Fig. 37

▶ Touch the touchbutton as shown in the illustration for 3 seconds until you hear the confirmation tone.
▷ Device is switched off.
▶ Touch the touchbutton as shown in the illustration for 10 seconds until you hear the confirmation tone after 10 seconds.
▶ Briefly touch the touchbutton five times.
▷ All temperature LEDs light up briefly four times: Demo mode is deactivated.
▷ Device is switched off.
▶ Switch on the device. (see Switching on the device)

Resetting to factory settings

Use this function to reset all settings to factory defaults. All settings you have made so far are reset to their original settings.

Application:

- Reset device

Performing a reset

The function is located in the submenu at the position of LED 3.

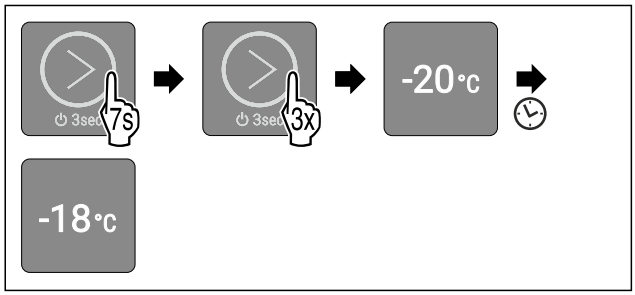

Fig. 38

▶ Carry out action steps according to the illustration.
▷ LED 3 lights up.
▷ After 5 seconds without interaction, the device is reset and restarted.
▷ Device is reset.
▷ LED 2 lights up: Temperature is set to -18 °C at the factory.
▷ The device cools to the target temperature set at the factory.

7.3 Messages

Messages are indicated audibly by an alarm tone and visually by the LEDs flashing in the display. Different LEDs flash depending on the type of message.

You can end the following messages yourself. For all other messages, you must contact the customer service. (see 10.4 Customer Service)

Message	Cause	Exit the message
The alarm tone sounds at an ever-increasing volume. Interior lighting pulses. **Door alarm**	The message appears if the door is open for more than 60 seconds.	Carry out action steps (see Door alarm) .
LED 1-5 flash. Alarm tone sounds. Interior lighting pulses. **Power outage alarm**	The message appears when a power failure has occurred and the freezing temperature has changed.	Carry out action steps (see Power outage alarm) .
LED 1-5 flash. Alarm tone sounds. Interior lighting pulses. **Temperature alarm**	The message appears if the temperature does not correspond to the set temperature.	Carry out action steps (see Temperature alarm) .

Overview of messages

7.3.1 Ending messages

Door alarm

Fig. 39

▶ End alarm: Carry out action steps according to the illustration.

-or-

▶ Close the door.

▷ Alarm has ended.
▷ If the door is not closed: Message appears again after 4 minutes.

Power outage alarm

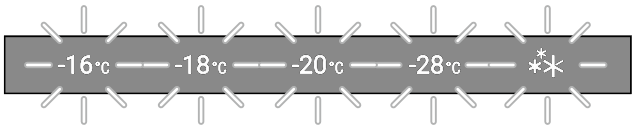

Fig. 40 Display in case of power failure

Fig. 41

▶ End alarm: Carry out action steps according to the illustration.
▷ The device continues to run in normal mode.
▷ LED of the previously set temperature flashes until temperature is reached.
▷ **LED flashes once per second:** Freezing temperature was below -9 °C during the power failure. Food can still be consumed.
▷ **LED flashes twice per second:** Freezing temperature has risen above -9 °C during the power failure.

*** Depending on model and options**

When LED flashes twice per second:
▶ Check the food.

Temperature alarm

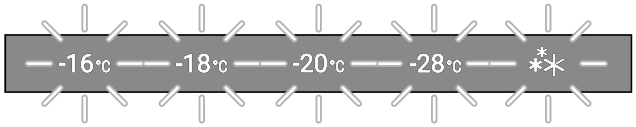

Fig. 42 Display in case of temperature alarm

Possible causes for temperature differences:
- You have put in warm, fresh food.
- Too much warm air has got in while you were sorting out the freezer or removing items.
- There has been a longer power failure.
- The device is faulty.

▶ Eliminating causes.

Fig. 43

▶ End alarm: Carry out action steps according to the illustration.
▷ The device continues to run in normal mode.
▷ LED of the previously set temperature flashes until temperature is reached.
▷ **LED flashes once per second:** Freezing temperature was below -9 °C during the temperature alarm. Food can still be consumed.
▷ **LED flashes twice per second:** Freezing temperature has risen above -9 °C during the temperature alarm.
When LED flashes twice per second:
▶ Check the food.

8 Features

8.1 Drawers

You can remove the drawers for cleaning.

You can remove the drawers to use VarioSpace.

The way to remove/insert the drawers varies depending on the pull-out system. Your appliance can contain various pull-out systems.

For appliances with NoFrost:*

Note
The energy consumption increases and the cooling power goes down if ventilation is not sufficient.*
▶ Leave the bottom drawer in the appliance!*
▶ Always leave the fan air vents clear on the back wall!*

For appliances without NoFrost:*

Note
The energy consumption increases and the cooling power goes down if ventilation is not sufficient.*
▶ Always leave the fan air vents clear on the back wall!*

8.1.1 Drawer on appliance base or glass shelf

The drawer runs directly on the appliance base or on a glass shelf. There are no rails.

When you remove the drawers, you can use the glass shelves below them as storage shelves.

Removing drawer

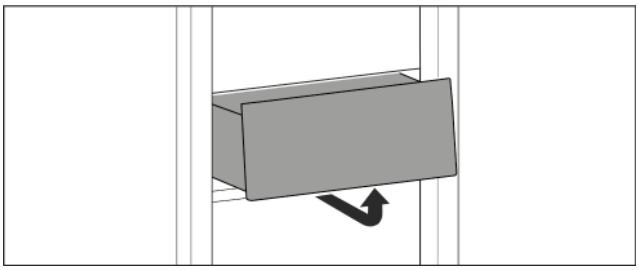

Fig. 44

▶ Remove drawer as shown in the illustration.

Inserting drawer

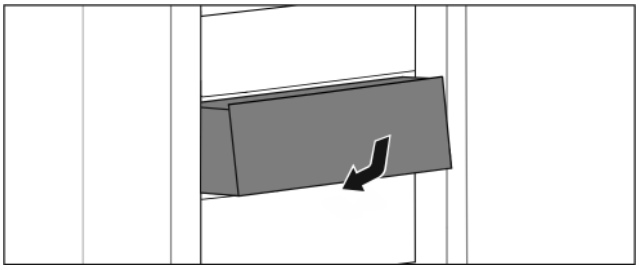

Fig. 45

▶ Insert drawer as shown in the illustration.

8.2 Glass shelves

You can remove the glass shelves under the drawers for cleaning.

You can remove the glass shelves under the drawers to use VarioSpace.

8.2.1 Removing / inserting the glass shelf

Make sure that the following requirements are fulfilled:
❑ Glass shelf under the drawer: The drawer has been removed. (see 8.1 Drawers)

Removing glass shelf

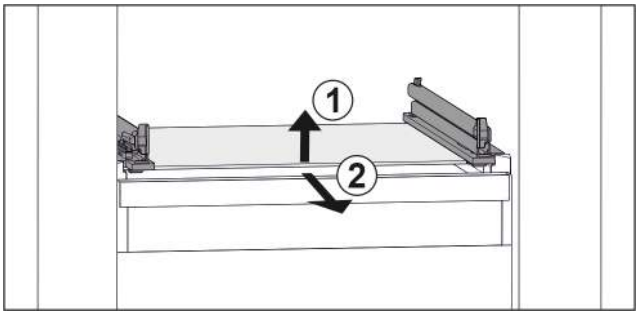

Fig. 46 Example illustration of glass shelf

▶ Lift glass shelf at the front. *Fig. 46 (1)*
▶ Take out glass shelf to the front. *Fig. 46 (2)*

Inserting glass shelf

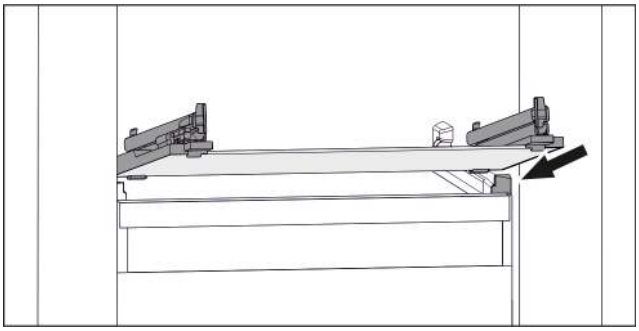

Fig. 47 Example illustration of glass shelf

▶ Position glass shelf at an angle behind the stoppers. (see Fig. 47)
▶ Lower glass shelf.
▶ Slide in glass shelf to the back.

8.3 VarioSpace

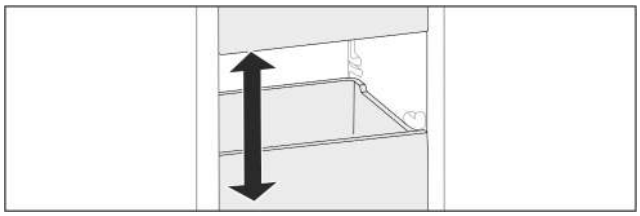

Fig. 48

You can remove drawers and glass panels from your appliance. This provides more room for large food items such as poultry, joints of meat, large game, and tall baked products. You can then freeze these items whole for later preparation.

▶ Note the weight limits on the drawers and glass panels (see 10.1 Technical specifications) .

9 Maintenance

9.1 Disassembling / assembling pull-out systems

9.1.1 Notes on disassembly

You can disassemble some of the pull-out systems for cleaning. Your appliance can contain a variety of pull-out systems.

The following pull-out systems can be disassembled or cannot be disassembled:

Pull-out system	can be disassembled / cannot be disassembled
Drawer on appliance base or glass shelf	cannot be disassembled

9.2 Defrosting the appliance

WARNING
Improper defrosting of the appliance!*
Injuries and damage.

▶ Do not use mechanical equipment or other methods to speed up the defrosting process other than those recommended by the manufacturer.
▶ Do not use electrical heating or steam-cleaning appliances, naked flames or defroster sprays to defrost.
▶ Do not use sharp objects to remove ice.

9.2.1 Defrosting with NoFrost*

Defrosting is performed automatically with the NoFrost system. The moisture is deposited on the evaporator, is periodically defrosted and evaporates.

The appliance does not have to be defrosted.

9.2.2 Manual defrosting*

A layer of frost or ice forms after prolonged use.

The following factors promote the formation of frost or ice:

- The appliance is opened frequently.
- Hot food is put in.

One day before defrosting:

▶ Activate SuperFrost. (see 7.2 Appliance functions)
▷ Frozen goods have a “residual coldness”.
▶ Switch the appliance off.
▶ Pull the mains plug out of the socket or switch the fuse off.
▶ Wrap the frozen produce in newspaper or blankets and store in a cool place.
▶ Place a pan of hot water (not boiling) on the middle shelf.

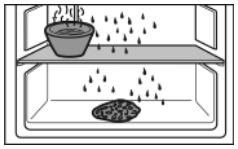

-or-

▶ Fill the two bottom drawers half-full with warm water and place them inside the appliance.

▷ This speeds up the defrosting process.
▷ Water from the thawing process is collected in the drawers.
▶ Leave the appliance door open during defrosting.
▶ Remove loosened pieces of ice.
▶ Soak up the melted ice water with a sponge or cloth several times as necessary.
▶ Clean the appliance. (see 9.3 Cleaning the appliance)

9.3 Cleaning the appliance

9.3.1 Ready

WARNING
Danger of electric shock!

▶ Remove the refrigerator connector or interrupt the power supply.

WARNING
Risk of fire

▶ Do not damage the refrigeration circuit.

▶ Empty the appliance.
▶ Remove mains connector.

9.3.2 Clean the housing

NOTICE
Improper cleaning!
Damage to the appliance.

▶ Only use soft cleaning cloths and ph-neutral all-purpose cleaners.
▶ Do not uses abrasive sponges or steel wool which may cause scratches.
▶ Do not use any sharp or abrasive cleaning agents, nor any that contain sand, chloride or acid.

WARNING
Risk of injury and damage as a result of hot steam!
Hot steam can lead to burns and can damage the surfaces.

▶ Do not use any steam cleaners!

▶ Wipe the housing down with soft, clean cloth. If very dirty, use lukewarm water with a neutral cleaner. Glass surfaces can also be cleaned with glass cleaner.

9.3.3 Cleaning the interior

NOTICE
Improper cleaning!
Damage to the appliance.
- ▶ Only use soft cleaning cloths and ph-neutral all-purpose cleaners.
- ▶ Do not uses abrasive sponges or steel wool which may cause scratches.
- ▶ Do not use any sharp or abrasive cleaning agents, nor any that contain sand, chloride or acid.

- ▶ Plastic surfaces: clean by hand with a soft clean cloth, lukewarm water and a little detergent.
- ▶ Metal surfaces: clean by hand with a soft clean cloth, lukewarm water and a little detergent.

9.3.4 Clean the components

NOTICE
Improper cleaning!
Damage to the appliance.
- ▶ Only use soft cleaning cloths and ph-neutral all-purpose cleaners.
- ▶ Do not uses abrasive sponges or steel wool which may cause scratches.
- ▶ Do not use any sharp or abrasive cleaning agents, nor any that contain sand, chloride or acid.

Clean with a soft, clean cloth, lukewarm water and some detergent:

- Drawer
- ▶ To disassemble components: see the relevant section.
- ▶ Clean the components.

9.3.5 After cleaning

- ▶ Wipe the appliance and the components dry.
- ▶ Connect and switch on the appliance.
- ▶ Activate SuperFrost (see 7.2 Appliance functions) .
  The temperature is cold enough:
- ▶ Place the food inside.
- ▶ Repeat cleaning regularly.

10 Customer help

10.1 Technical specifications

Temperature range	
Freeze	-28 °C to -16 °C

Maximum ice cube quantity / 24 hours	
Freezer compart-ment	see type plate under “Freezing capacity .../ 24 h”

Maximum loading weight for the equipment	
Equipment	
Drawer on glass shelf (see 8.1.1 Drawer on appliance base or glass shelf)	13 kg

Lighting	
Class[1]	Light source
This product contains one or more energy efficiency class G light sources.	LED

[1] The appliance may contain light sources with different energy efficiency classes. The lowest energy efficiency class is indicated.

10.2 Operating noises

The appliance makes different noises when it is on.

- At **higher temperatures** the appliance uses less energy but works for longer. It is **quieter**.
- At **lower temperatures** the food is cooled faster. It is **louder**.

  Examples:
  - Functions on (see 7.2 Appliance functions)
  - Food recently added
  - High ambient temperature
  - Door open for a while

Noise	Possible cause	Type of noise
Bubbling and splashing	Coolant flowing into the cooling circuit.	Normal operating noise
Hissing	Coolant sprays into the cooling circuit.	Normal operating noise
Humming	The appliance is cooling. The volume depends on the cooling output.	Normal operating noise
Clicking	Components are switched on and off.	Normal switching noise
Rattling or humming	Valves or flaps are working.	Normal switching noise

Noise	Possible cause	Type of noise	Lifting
Vibration	Improper setup	Defective noise	Level the appliance using the adjustable feet.
Rattling	Components, items inside the appliance	Defective noise	Secure components. Leave enough space between the items.

10.3 Technical fault

Your appliance is designed and built to ensure it works reliably and has a long service life. In the unlikely event that a fault occurs during operation, please check whether it is due to an operating error. If so, you will be charged for the callout and repair costs even if it falls within the warranty period.

You can fix the following faults yourself.

10.3.1 Appliance function

Defect	Cause	Remedy
The appliance is not working.	→ The appliance is not switched on.	▶ Switch the appliance on.
	→ The power plug is not properly plugged into the socket.	▶ Check the power plug.
	→ There is something wrong with the power outlet fuse.	▶ Check the fuse.
	→ Power cut	▶ Keep the appliance closed. ▶ Safeguarding food: Place cold packs on top of food or use another freezer if the power cut lasts longer. ▶ Do not re-freeze defrosted food,
	→ The IEC socket is not plugged into the appliance correctly.	▶ Check the IEC socket.
Temperature is not cold enough.	→ The appliance door is not closed properly.	▶ Close the appliance door.
	→ Not enough ventilation.	▶ Keep ventilation grille clear, and clean it.
	→ The ambient temperature is too high.	▶ Problem solution: (see 1.3 Appliance range of use)
	→ The appliance was opened too many times or for too long.	▶ Wait to see if the required temperature corrects itself. If not, contact Customer Service. (see 10.4 Customer Service)
	→ Too much fresh food was placed inside without SuperFrost.	▶ Solution: (see SuperFrost)
	→ The temperature is set incorrectly.	▶ Turn down the temperature and check after 24 hours.
	→ The appliance is too close to a heat source (oven, radiator, etc).	▶ Move the appliance or the heat source.
The door seal is defective or needs to be replaced for another reason.	→ The door seal can be replaced. It can be replaced without the need for special tools.	▶ Contact Customer Service. (see 10.4 Customer Service)
The appliance builds up too much ice or condensa-tion.	→ The door seal may have slipped out of its groove.	▶ Check that the door seal is well fitted in the groove.
Concentrated collection of ice on inside face at centre of appliance cover.*	→ This build-up of ice is normal. Physical properties cause ice to build up inside the top of the appli-ance.	▶ Remove the ice with a scraper tool.

10.3.2 Features

Defect	Cause	Remedy
The internal light does not come on.	→ The appliance is not switched on.	▶ Switch the appliance on.
	→ The door was open for longer than 15 minutes.	▶ Interior lighting switches off automatically after about 15 minutes when the door is open.
	→ The LED interior light is faulty or the lid is damaged.	▶ Contact Customer Service. (see 10.4 Customer Service)

10.4 Customer Service

First check whether you can rectify the fault yourself (see 10 Customer help) . If you cannot rectify the problem, contact Customer Service.

You can find the address in the enclosed brochure “Liebherr-Service” or at home.liebherr.com/service.

* Depending on model and options

WARNING
Unprofessional repair!
Injuries.
- ▶ Have any repairs and action - not expressly specified - on the appliance and mains cable carried out by service personnel only. (see 9 Maintenance)
- ▶ A damaged mains cable may only be replaced by the manufacturer, the manufacturer's Customer Service or a similarly qualified person.
- ▶ In the case of appliances with an IEC connector, the change may be made by the customer.

10.4.1 Contacting Customer Service

Make sure that the following appliance information is available:

- ❑ Appliance name (model and index)
- ❑ Service no. (Service)
- ❑ Serial no. (S no.)

- ▶ Refer to the type plate for device information. (see 10.5 Model plate)
- ▶ Note down the appliance information.
- ▶ Notify customer service: Report errors and the appliance information.
- ▷ This will help us to provide you with a faster, more accurate service.
- ▶ Follow further instructions from Customer Service.

10.5 Model plate

The model plate is behind the drawers on the inside of the appliance.

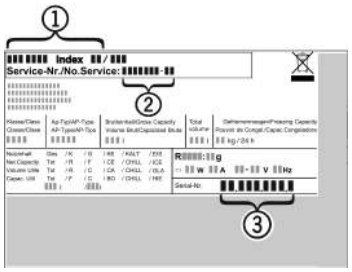

Fig. 49

(1) Appliance description **(3)** Serial no.
(2) Service no.

- ▶ Note the data on the model plate.

11 Shutting down

- ▶ Empty the appliance.
- ▶ Switch off appliance. (see Switching the appliance off and on)
- ▶ Pull the mains plug out of the socket.
- ▶ Remove the IEC socket if required: Pull the IEC socket out of the appliance plug and move it to the left and right at the same time.
- ▶ Clean appliance. (see 9.3 Cleaning the appliance)
- ▶ Leave the door open, so that no unpleasant odours arise.

12 Disposal

12.1 Preparing appliance for disposal

Liebherr uses batteries in some of its appliances. In the EU, for environmental reasons, legislation obliges the end user to remove these batteries before disposing of old appliances. If your appliance contains batteries, a corresponding notice is attached.

Lamps — If you can remove the lamps yourself without destroying them, also remove these before disposal.

- ▶ Take the appliance out of operation.
- ▶ If possible: remove lamps without destroying them.

12.2 Disposing of the appliance in an environmentally friendly manner

The appliance still contains valuable materials and must be disposed of separately from unsorted municipal waste.

Dispose of batteries separately from the old appliance. To do this, you can return the batteries free of charge to retailers as well as recycling centres and collection centres for recyclable materials.

Lamps — Dispose of removed lamps via the respective collection systems.

For Germany: — You can dispose of the appliance free of charge via the class 1 collection containers at the local recycling and recyclable material collection centres. When purchasing a new fridge/freezer, if the sales area > 400 m², retailers will also take back the old appliance free of charge.

WARNING
Leaking coolant and oil!
Fire. The coolant contained in the appliance is eco-friendly, but also flammable. The oil contained in the appliance is flammable. Escaping coolant and oil can ignite if the concentration is high enough and in contact with an external heat source.
- ▶ Do not damage the pipelines of the coolant circuit and the compressor.

- ▶ Observe the notes on transporting the appliance. (see 4.6 Transporting appliance)
- ▶ Transport the appliance without damaging it.
- ▶ Dispose of batteries, lamps and the appliance according to the above specifications.

home.liebherr.com/fridge-manuals

EN countertop freezer
ORIGINAL OPERATOR'S MANUAL

Issue date: 20250219

Part number index: 7086752-00

Liebherr-Hausgeräte Marica EOOD
Bezirk Plovdiv
4202 Radinovo
Bulgarien