USER MANUAL

Elo Touch Solutions

I-Series 3 with Intel® Touch computer

Copyright © 2025 Elo Touch Solutions, Inc. All Rights Reserved.

No part of this publication may be reproduced, transmitted, transcribed, stored in a retrieval system, or translated into any language or computer language, in any form or by any means, including, but not limited to, electronic, magnetic, optical, chemical, manual, or otherwise without prior written permission of Elo Touch Solutions, Inc.

Disclaimer

The information in this document is subject to change without notice. Elo Touch Solutions, Inc. and its Affiliates (collectively "Elo") make no representations or warranties with respect to the contents herein, and specifically disclaims any implied warranties of merchantability or fitness for a particular purpose. Elo reserves the right to revise this publication and to make changes from time to time in the content hereof without obligation of Elo to notify any person of such revisions or changes.

Trademark Acknowledgments

Elo, Elo (logo), Elo Touch, Elo Touch Solutions, TouchPro are trademarks of Elo and its Affiliates. Windows is a trademark of Microsoft Corporation.

Table of Contents

Section 1: Introduction 4

Section 2: Installation 11

Section 3: Operation 13

Section 4: Options and Upgrades 24

Section 5: Technical Support 26

Section 6: Safety & Maintenance 28

Section 7: Regulatory Information 31

Section 8: Warranty Information 41

Section 1: Introduction

Product Description

The versatile I-Series 3 with Intel® System combines modern aesthetics, modular flexibility, and commercial-grade reliability. Purpose-built for point of sale, I-Series 3 with Intel® offers a variety of touchscreen display sizes among 15" 4:3, 17" 5:4, 15.6" 16:9 FHD, 21.5" 16:9 FHD, and 23.8" 16:9 FHD a choice of Intel's 12th generation Alder Lake-PS SoC Celeron, i3, i5, and i7 Core processors. All models including TPM 2.0 and i5/i7 models support VPRO for maximum system security and manageability. All models provide the flexibility needed for peripherals you need for any application- whether a customer-facing display, payment reader, printer, cash drawer, barcode scanner, or scale, I-Series 3 with Intel® has it covered. From traditional POS to self-service applications. I-Series 3 with Intel® delivers the durability needed to survive continuous public use and is backed by Elo's standard 3-year warranty.

ESY15iXC	ESY17iXC	ESY22iXC	ESY24iXC
BOE, PV156FHM-N30	INX, M170EGE L20	LCD, LM215WF3-SLS2	AUO, M238HVN01 V0
INX, G156HCE-E01	AUO, M170ETN01.1	AUO, M215HAN01.2	BOE, MV238FHM-N10
AUO, G150XTN03.8	INX, G170ECE-LE1		
INX, G150XJE-E02			

Precautions

Follow all warnings, precautions and maintenance tips as recommended in this user manual to maximize the life of your unit and prevent risks to user safety. See Chapter 6 for more information on safety.

This manual contains information that is important for the proper setup and maintenance of the I-Series 3 with Intel® touch computers. Before setting up and powering on your unit, please read through this manual in detail seriously and carefully.

I-Series 3 with Intel (with Stand) Layout

15.6" model is shown below

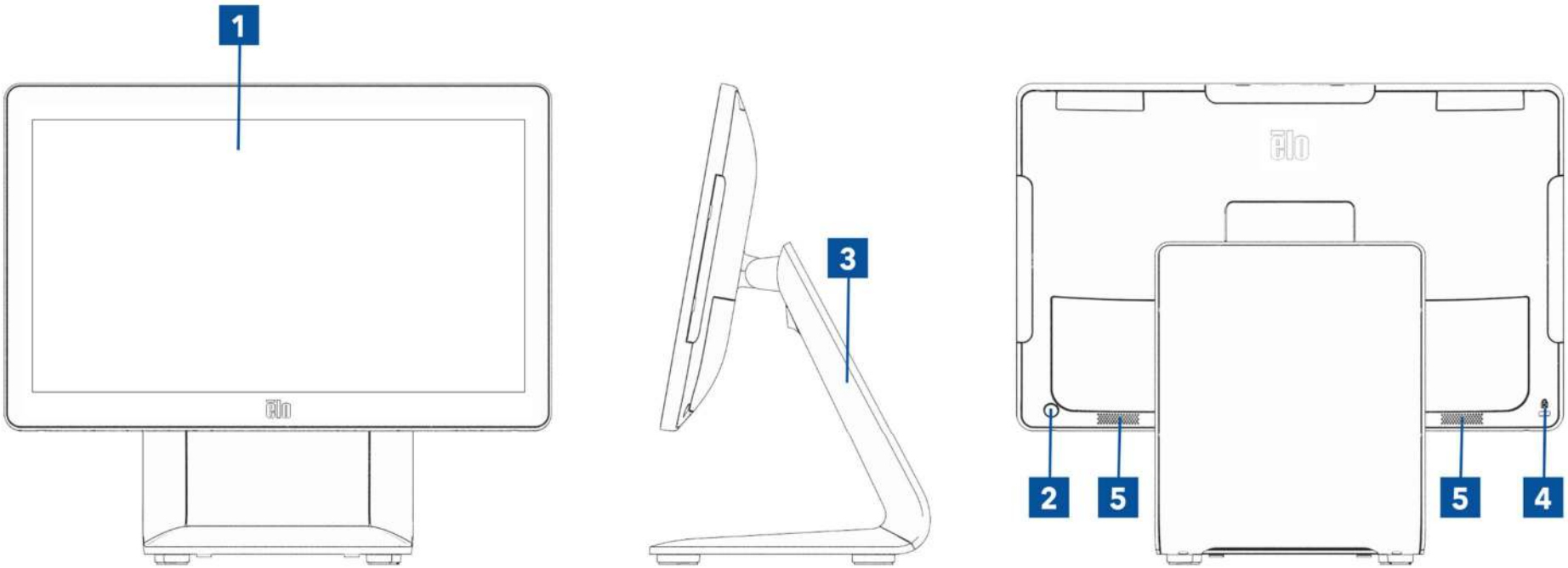

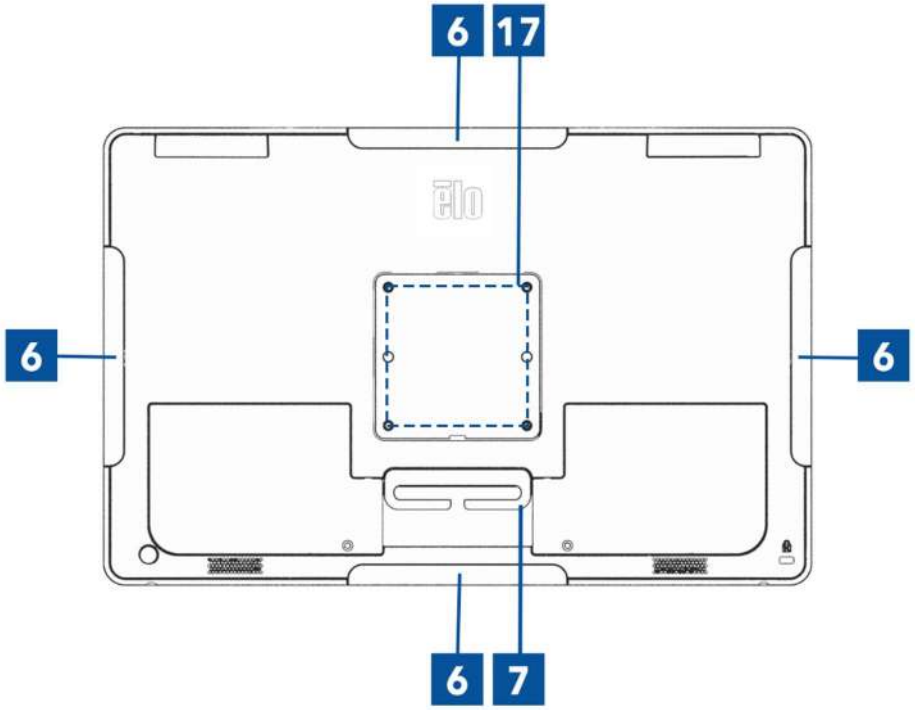
6
17
6
6
6
7

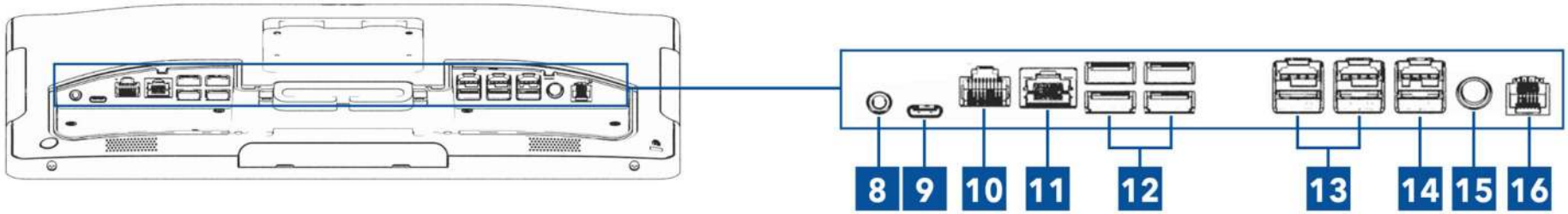
8
9
10
11
12
13
14
15
16

I-Series 3 with Intel (without Stand) Layout

15.6" model is shown below

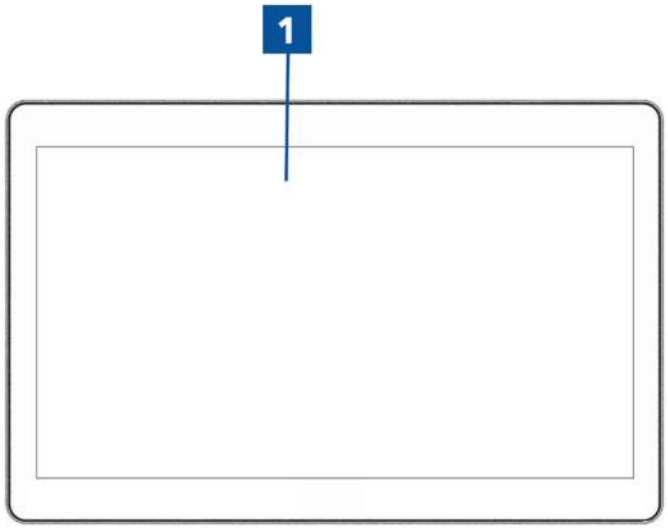

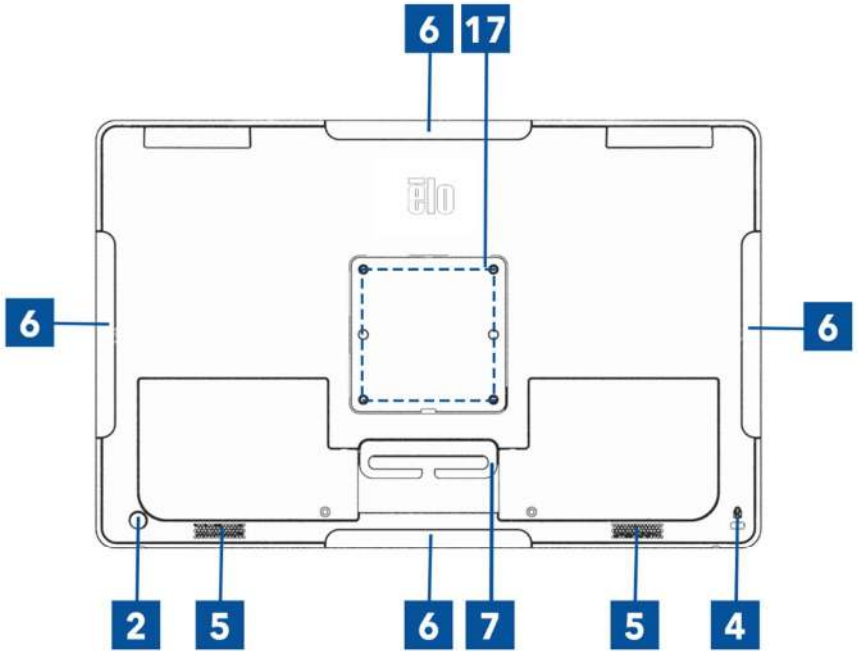

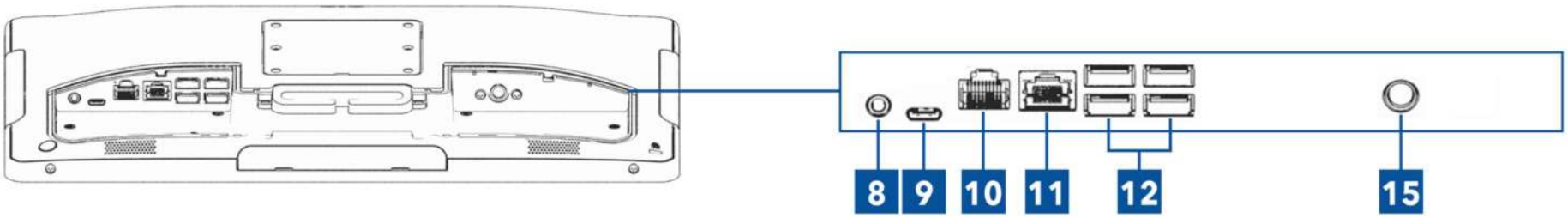

1	Display with Touch	11	Ethernet LAN Port
2	Power Button/Power Indicator LED	12	USB Type A Port (4x)
3	Stand (with stand only)	13	+12 Volt Powered USB Port (2x, with stand only)
4	Kensington Lock	14	+24 Volt Powered USB Port (with stand only)
5	Speaker	15	Power Connector (DC-IN)
6	Edge Micro USB Port for Elo Peripherals	16	Cash Drawer Port (A/B) (with stand only)
7	Cable Guide	17	Wall Mount/Arm Screw Hole
8	Headset		
9	USB C Port		
10	Powered Serial Port (COM1/RJ-50)		

1. Display with Touch

The model is available with the following touch technologies.

- TouchPro, zero-bezel projective capacitive (PCAP)

2. Power Button/Power Indicator LED

Press the power button to turn on/off the touch computer system. The power indicator LED shows the state of the touch computer. See Section 3 for more details.

3. Stand

The stand has a robust design supporting the touch computer system.

4. Kensington Lock

Kensington Lock is a standard anti-theft mechanism to secure the desktop to the desired mounting location. The Kensington cable lock is not included.

5. Speaker

Two, integrated, 2-watt speakers provide audio output for playback.

6. Edge Micro USB Port (Accessory kit - connections)

The touch computer system includes four edge USB ports on the display for mounting optional peripherals. The peripherals can be mounted and fixed at the edge to meet many IO peripheral requirements.

7. Cable Guide

The system has integrated cable management fingers to improve cable routing. Two holes are also provided which can be used with included cable ties.

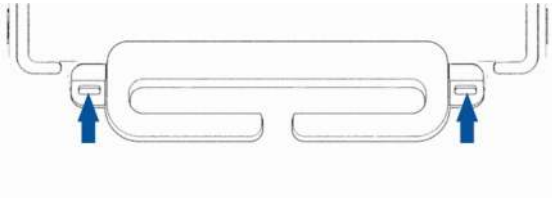

8. Headset

The audio port is designed for headset and microphone connectivity.

9. USB Type-C Port

The USB Type-C port allows connection to other type-C compatible devices (Up to 27W).

10. +12 Volt Powered Serial Port (COM/RJ-50)

The serial port is a RS-232 specification for RJ-50 interface connection. The default 12 Volts is disabled, and the settings are adjustable from the BIOS setting ➔ Advanced ➔ RJ50 COM Power Control.

11. Ethernet LAN Port

The touch computer system Ethernet LAN Port provides up to 1 Gbps speed capability for networking.

12. USB 3.2 Gen 1×1 Port

Four standard Super Speed+ USB 3.2 Gen 1×1(5Gbit/s) ports are available on the rear side of the touch computer system.

13. +12 Volt Powered USB Port

The maximum power rating of the +12 Volt Powered USB would be limited to 12 Volts at 1.5 Amps.

14. +24 Volt Powered USB Port

The +24 Volt Powered USB Port spec is designed for all touch computer systems. The maximum power rating of the +24 Volt Power USB is 24 Volt at 2.3 Amps. In special circumstance, please use an external power adapter for your 24V peripheral (DO NOT USE on board 24V Powered USB port) when both your system is running 100% loading and all I/O ports except 24V Powered USB port are connected for the maximum power load of each port.

Please ensure your overall peripheral power consumption does not exceed the following (assuming system is running at max power consumption which is not common for POS applications, 15"/21.5" i5 and all sizes of i7 with 16GB DIMM/256GB SSD, others with 8GB DIMM/128GB SSD):

a. Do not exceed 146W for ESY15i2C, 147W for ESY17i2C, 141W for ESY22i2C, 140W for ESY24i2C.

b. Do not exceed 131W for ESY15i3C, 133W for ESY17i3C, 120W for ESY22i3C, 128W for ESY24i3C.

c. Do not exceed 130W for ESY15i5C, 130W for ESY17i5C, 123W for ESY22i5C, 124W for ESY24i5C.

d. Do not exceed 130W for ESY15i7C, 126W for ESY17i7C, 124W for ESY22i7C.

15. Power Connector (DC-IN)

To power up the touch computer, plug the DC connector of the AC/DC power adaptor kit into the power connection on the device.
Note: When you need to detach the DC plug from the stand module, grip it as the picture shown below and remove it carefully.

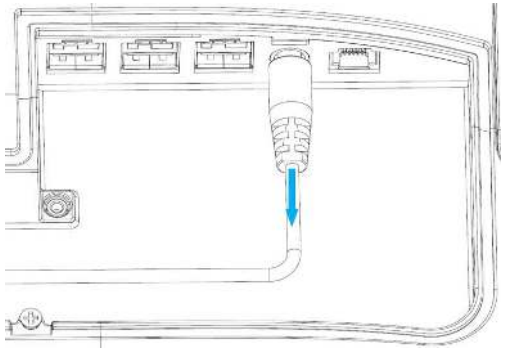

16. Cash Drawer Port (A/B)

The main cash drawer port is a RJ-12 interface design and provides switchable operation at +12VOLTs and +24VOLTs. The default setting is at +24 Volts and the settings are adjustable from the BIOS setting ➔ Advanced ➔ Cash Drawer Power Control.

Cash Drawer Port Pin assignment

Pin#	Signal Name	Pin#	Signal Name
1	GND	2	CD1-
3	CD1 Sense	4	CD Drive (+24/12V)
5	CD2-	6	Reserve

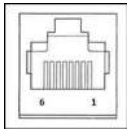

17. VESA Mount

A four-hole 75 x 75 mm for the rest size mounting pattern for M4 screws is provided on the rear of the 15"/15.6" touch computer system.

A four-hole 100 x 100 mm for the rest size mounting pattern for M4 screws is provided on the rear of the 17"/21.5"/23.8" touch computer system.
The VESA FDMI-compliant counting is coded: VESA MIS-D, C

Section 2: Installation

Unpacking the Touch Computer

Open the carton and verify that the following items are present:

- I-Series 3 with Intel® Touch computer
- Power Cable US/Canada
- Power Cable Europe
- +24 Volt Power Adaptor
- RJ50 to RS232 Serial Cable
- Screw, M3x10 (with stand only, for VESA cover mounting)
- Screw, M4x18 (15"/15.6" only, for 100mm adapter mounting)
- Quick Install Guide
- Screws, M4x12 (for VESA mounting)
- Screws, M4x20 (with stand only, for CFD mounting)
- Cable tie
- CFD Rear Cover (with stand only, for CFD mounting)
- VESA cover (with stand only, for changing to other VESA mount)
- 75mm to 100mm adapter (15" /15.6" only, for 100mm VESA mount)

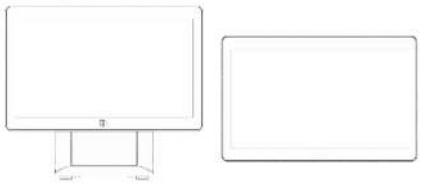

I-Series 3 with Intel® Touch computer

Power Cable US/Canada

Power Cable Europe

+24 Volt Power Adaptor

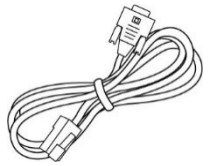

RJ50 to RS232 Serial Cable

Quick Install Guide

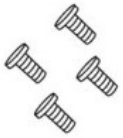

Screws

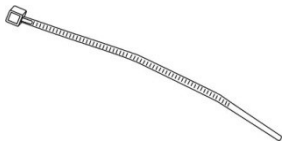

Cable tie

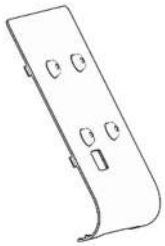

CFD Rear Cover

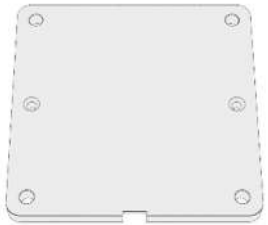

VESA Cover

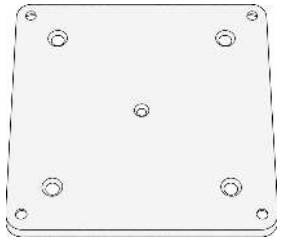

75mm to 100mm adapter

Adjusting the Display to a Suitable Position for I-Series 3 with Intel® (with stand)

The touch computer provides tilt adjustment to the monitor for different deployment scenarios. The tilt adjustment is shown below. (15.6" model is shown below)

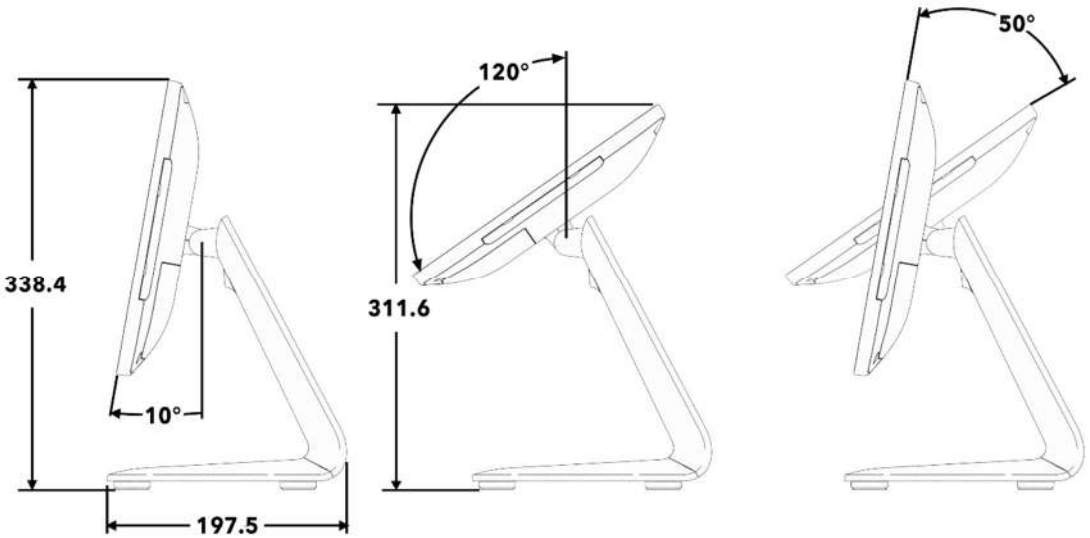

Mounting a Customer-Facing Display (CFD) for I-Series 3 with Intel® (with stand)

The AIO accommodates mounting of a 10"-13" CFD on the back of the stand. To assemble a CFD, follow the steps below.

1. Remove the two screws which attach the rear stand cover. Remove the rear stand cover by sliding it down and away from the stand.

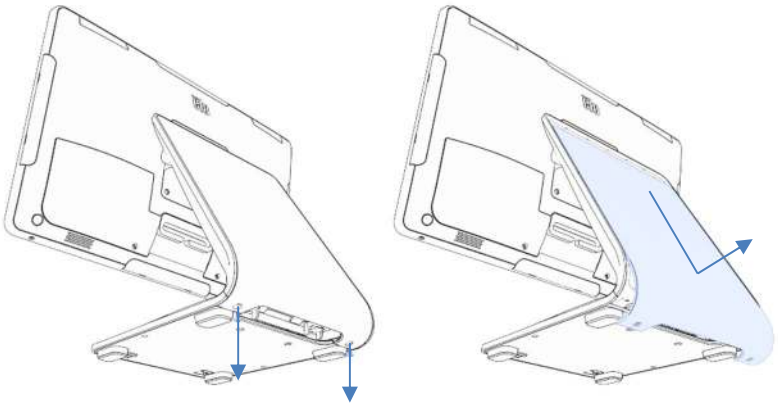

2. Assemble the CFD cover by reversing the process from step 1.

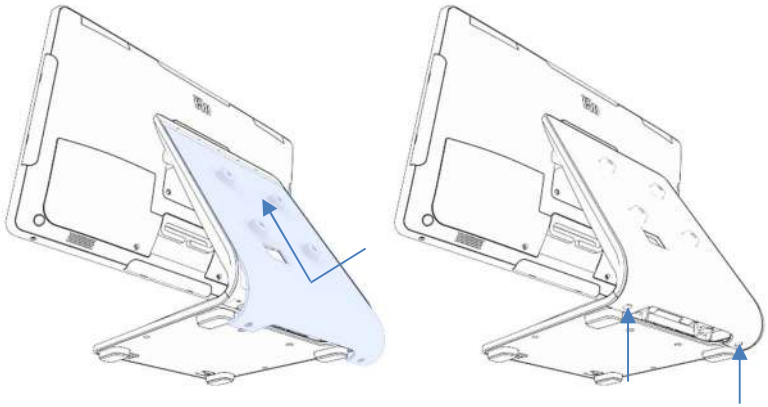

3. Remove the stand door by removing the two screws.

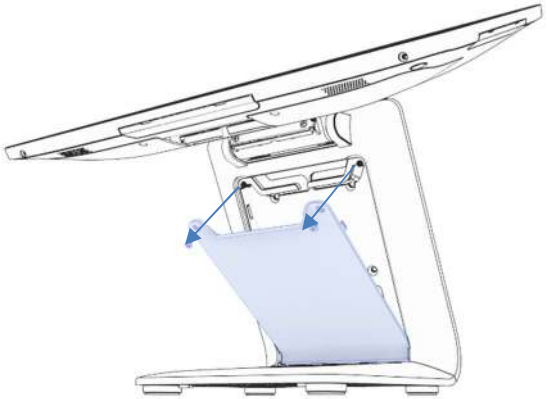

4. Connect USB-C cable (Elo P/N E969524, not included) to the CFD. Route the cable through the hole in the CFD cover/stand as shown, and connect to the AIO. Attach the CFD to the stand using the four M4 screws included. Reassemble the door.

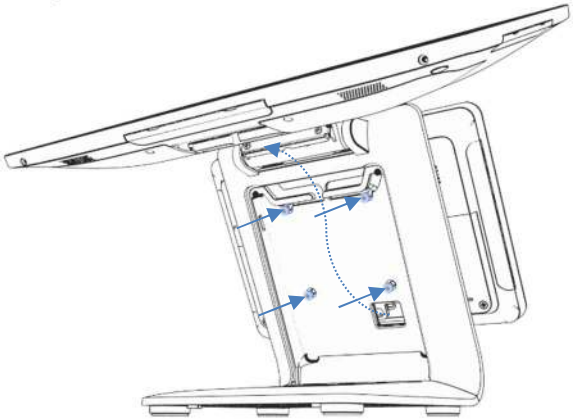

Mounting to a countertop for I-Series 3 with Intel® (with stand)

The AIO accommodates permanent mounting of the stand to a countertop. Follow the steps below.

1. Remove the stand door by removing the two screws.

2. Press down on the two plastic snaps at the rear of the base cover and slide the base cover forward to remove.

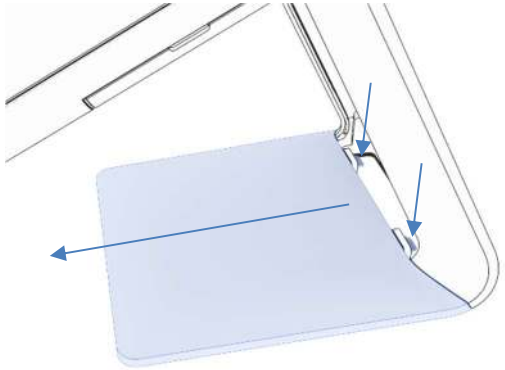

3. Install two screws through the holes shown below. See dimensional drawing for screw size and hole spacing.

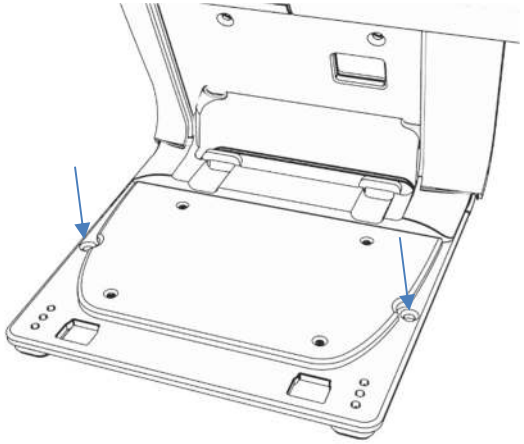

4. Reverse steps 1 and 2 to reinstall base cover and stand door.

Rear VESA Mount for I-Series 3 with Intel® (without stand)

A centered VESA pattern is provided on the rear of the product for mounting. For 15"/15.6", a 75x75mm mounting pattern is provided (compliant with VESA MIS-D, 75, C). Please refer to the MS drawing for details.

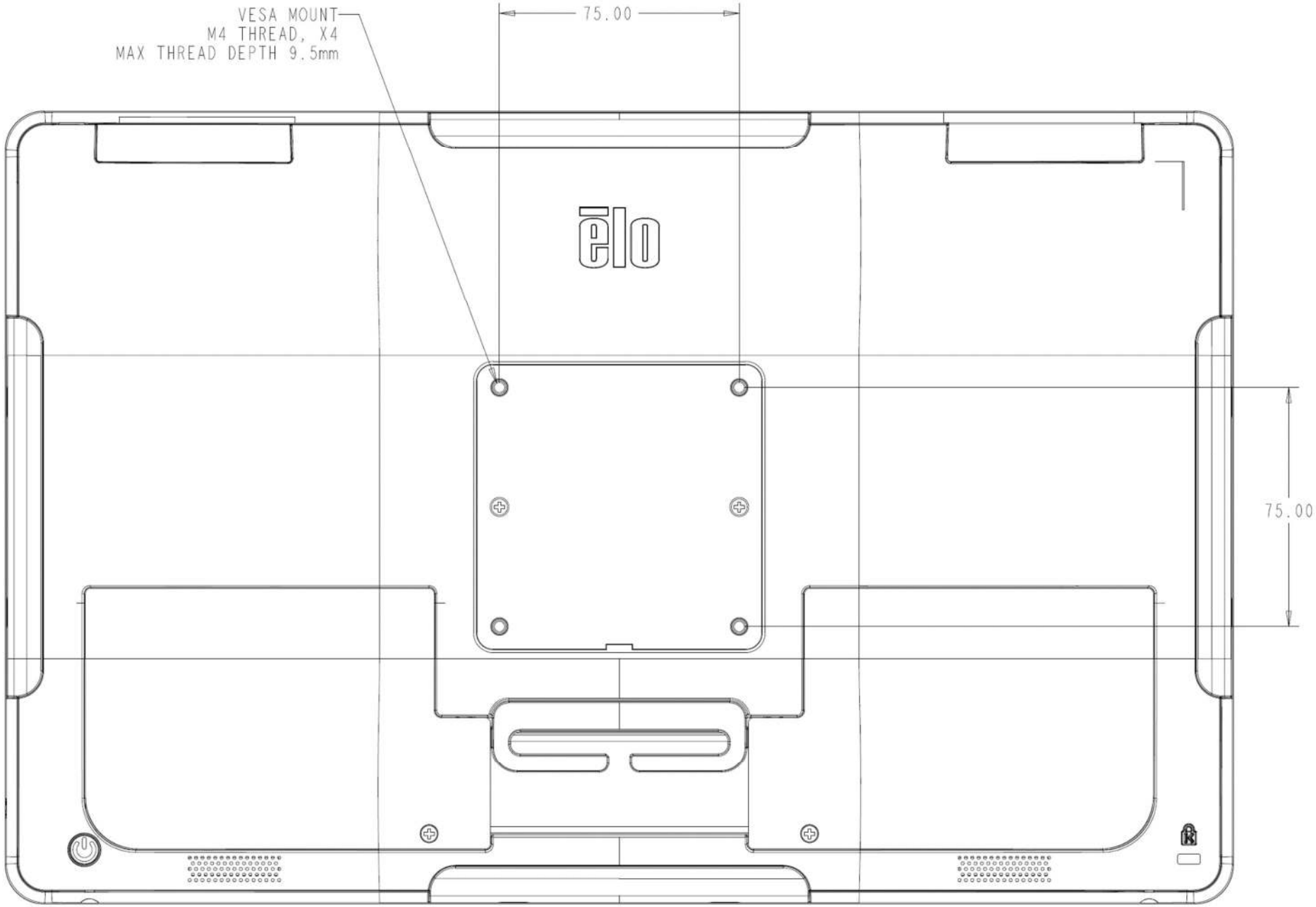

For other sizes, a 100x100mm mounting pattern is provided (compliant with VESA MIS-D, 100, C). Please refer to the MS drawing for details.

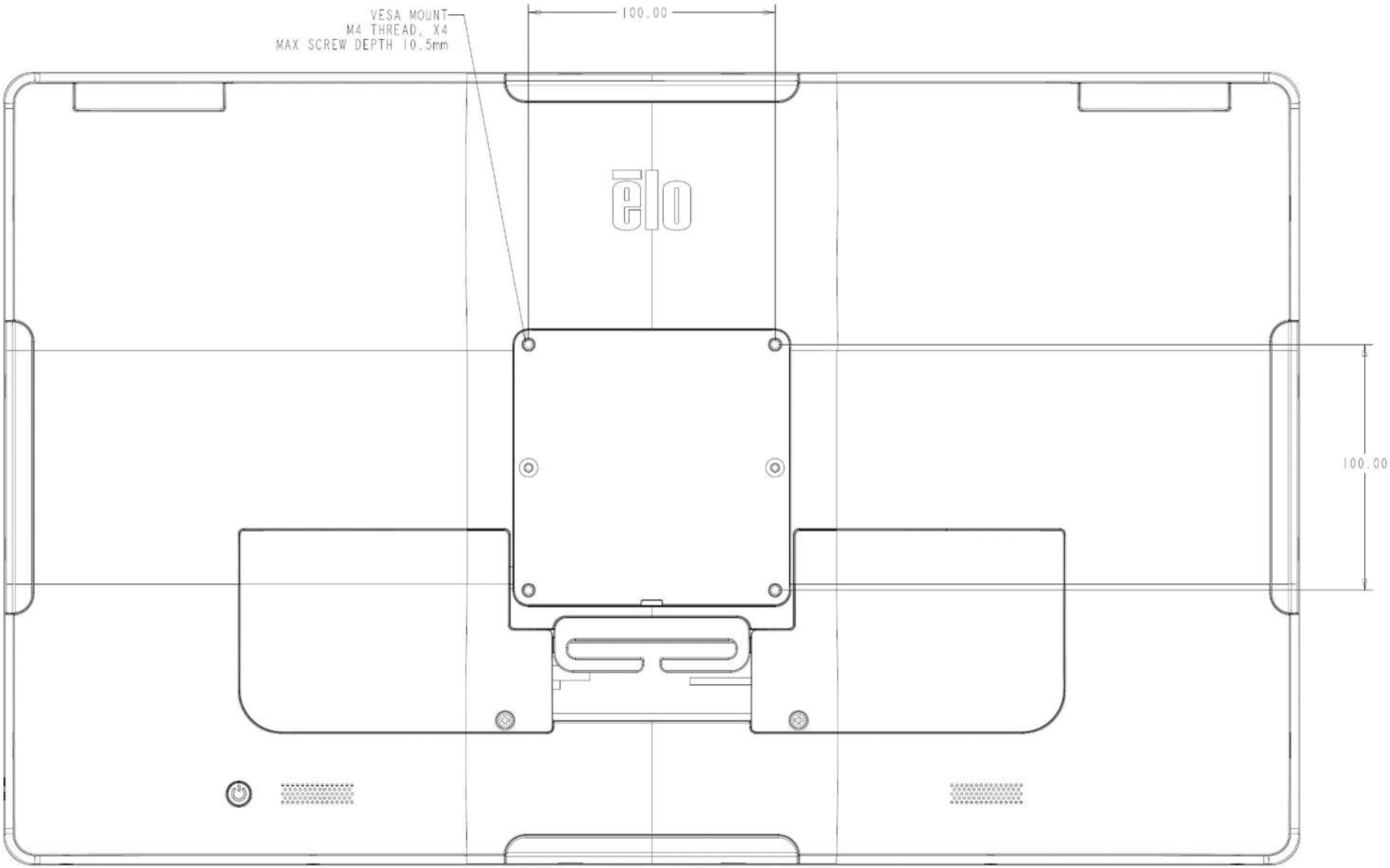

Section 3: Operation

General Information

This section describes unique features of the Elo all-in-one Touch computer.

Power LED

The I-Series 3 with Intel® has a Power LED indicating the state of the touch computer. The table below shows LED state and corresponding color.

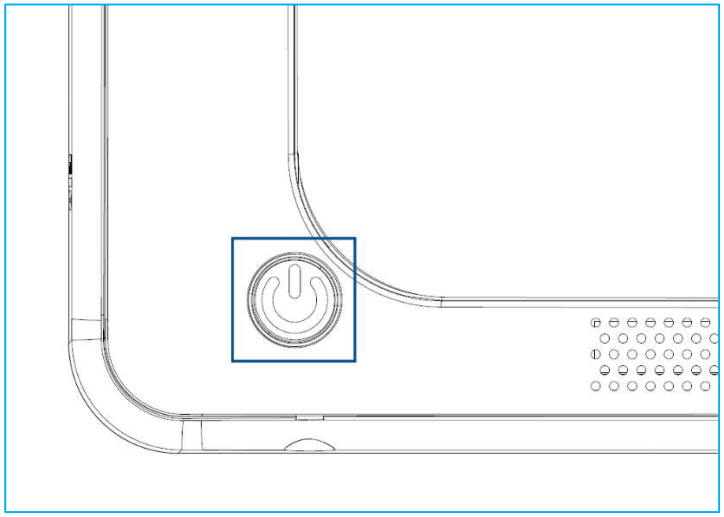

Touch Computer Status	LED Status
AC off	Off
Off mode	Red
Sleep mode	Orange
On	Green

Touching the screen will bring the system out of SLEEP mode (similar to moving the mouse or pressing a keyboard key).

Ethernet LAN LED

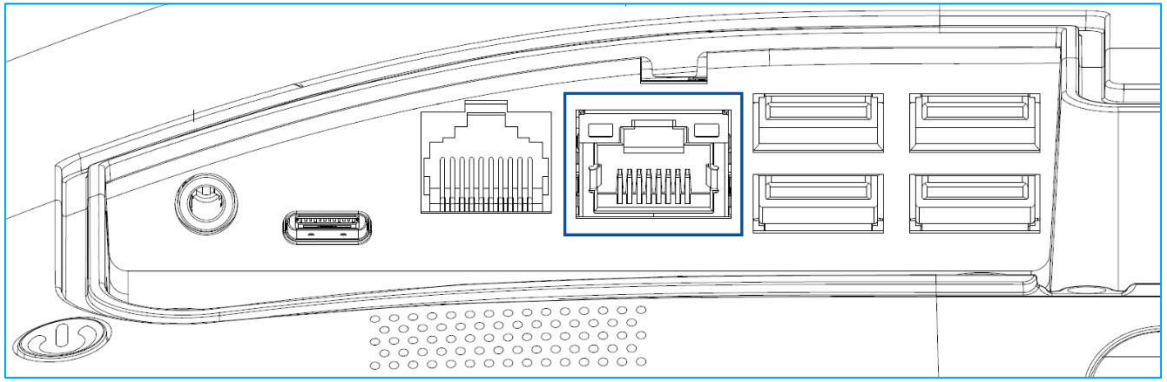

LAN Speed Status	LAN LED Status
10 Mbps	No Color
100 Mbps	Orange Color
1 Gbps	Green Color

Activity Status	ACT LED Status
No Link	No Color
Linked	Solid (Green Color)
Data Activity	Blinking (Green Color)

Touch

Your touchscreen display is factory-calibrated and does not need any additional manual calibration.

Setting Up the Operating System

If configured with an operating system, the initial setup of the operating system takes approximately 5-10 minutes. Additional time may be needed depending on the touch computer hardware configurations and connected devices.

To set up the Microsoft® Windows® Operating System for the touch computer, turn on the touch computer by pressing the power button, and then follow the on-screen instructions.
Elo has taken time to ensure all drivers are correct and loaded for your Windows operating system. If you decide to create your own image to reproduce on many systems, be sure to start with the Elo image or Elo driver packs under support. Or contact our support team for help.

Creating the Recovery Flash Drive

All Windows 10 touch computers come with the built-in Elo Restore Utility on the Windows Desktop. The utility can create a recovery flash drive based on the operating system you purchased. **Please create your recovery flash drive immediately**. In the event the HDD/SSD recovery partition is accidentally deleted or becomes inaccessible, you will need to use the recovery flash drive to recover your system.

The following procedures demonstrate how to use the utility to create a recovery flash drive.

1. Insert a blank flash drive to any of the available USB ports on your system.
2. Right-click the EloRestoreUtility icon on the Desktop and select "**Run as administrator**".
3. Select the drive and click "**Start**" button to begin the process.

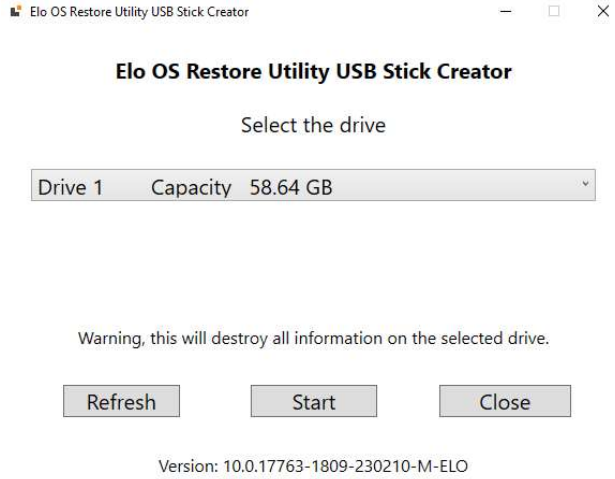

4. Click "**Continue**" to proceed. This step will take 10-20 minutes depending on your system configurations and flash drive performance. **PLEASE NOTE THAT ALL DATA WILL BE LOST DURING THIS PROCESS**.

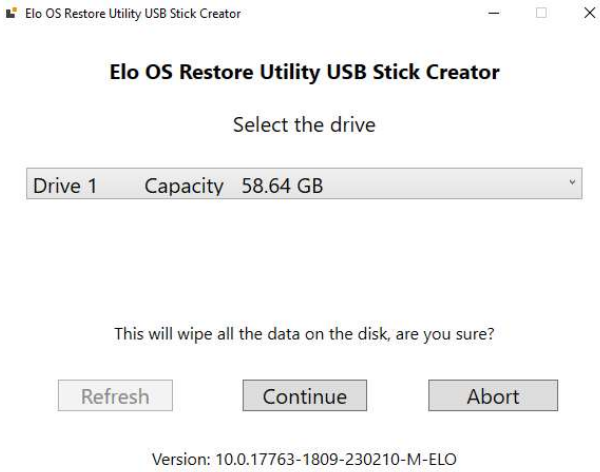

5. Once the message shows "**USB Stick complete with…**", please remove the flash drive and click "**Close**" to exit the program.

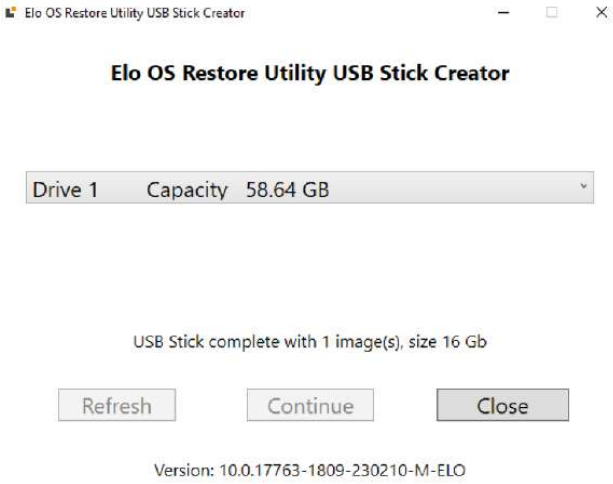

6. In case the system crashes, you must use the recovery flash drive, reboot the system and press **F11** several times to enter **DeviceBoot Menu**. Then, choose "**boot from flash drive**".

7. When the following UI is presented, click "**Deploy Windows OS image (with Recovery Partition)**" button.

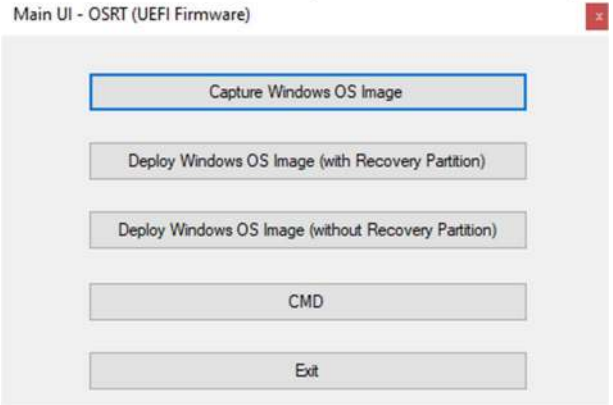

8. Follow the on-screen instructions to complete the installation process and then exit the program.

Note: All data is deleted during the recovery process. The user must back up files when necessary. Elo Touch Solutions does not accept liability for lost data or software.
Note: The end user must adhere to Microsoft's Licensing Agreement.

Recovering the Operating System

If for any reason the touch computer's operating system needs to be recovered to FACTORY SETTINGS, you can recover your system by following the procedures below. **PLEASE NOTE THAT ALL CUSTOMER SETTINGS AND DATA WILL BE LOST DURING THIS PROCESS.** Please be sure to completely backup all of your data, settings, and customer-installed software before proceeding.

1. Power off your system completely.
2. Power on your system.
3. When the following screen appears, tap to select "**UEFI – Recover Operating System**".

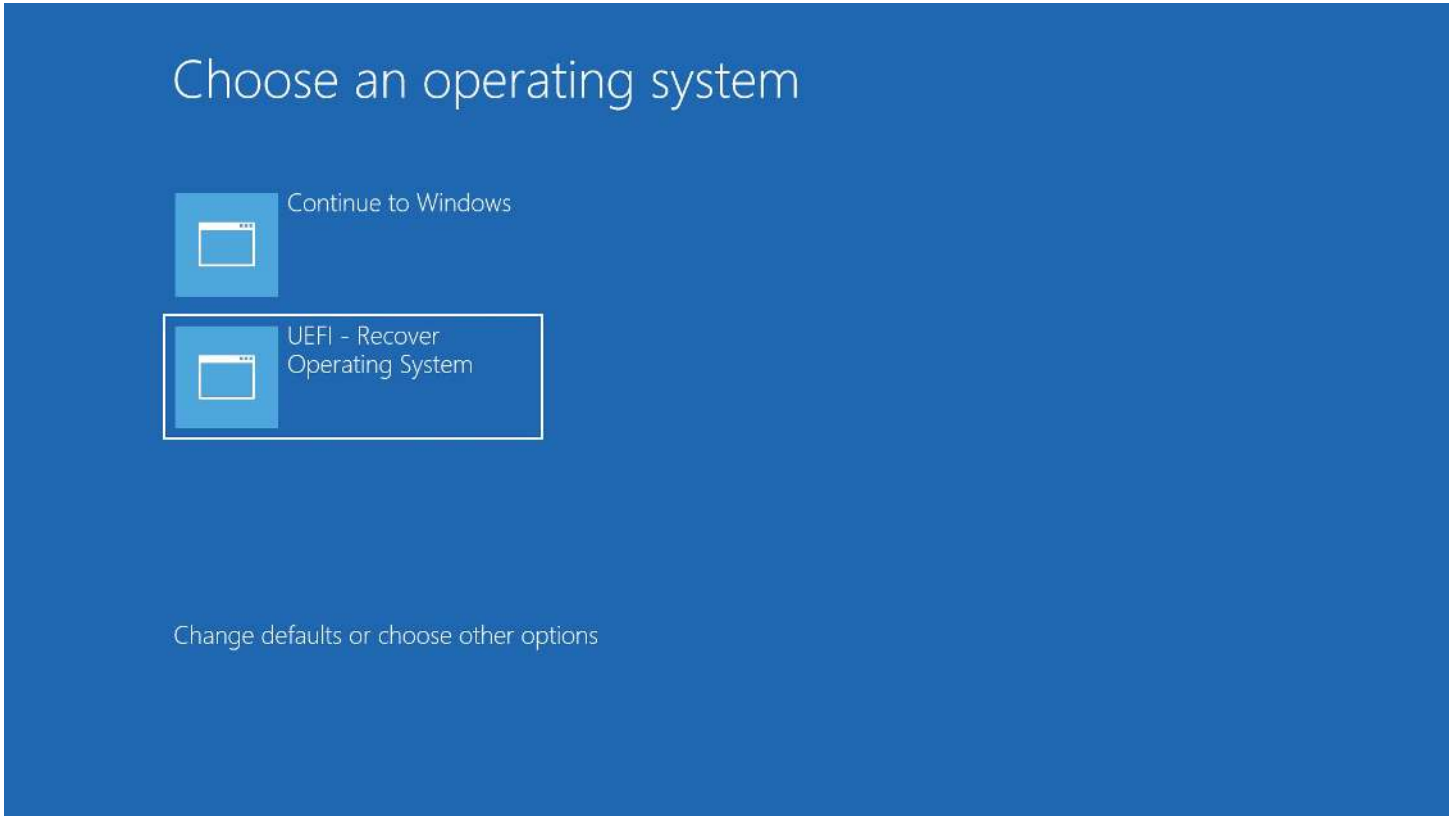

4. The following User Interface (UI) will be presented.

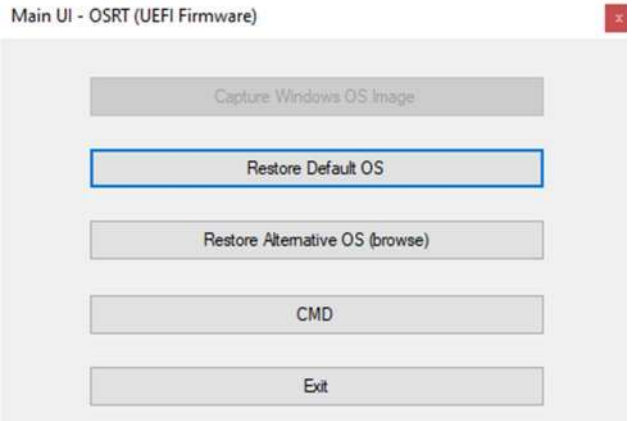

5. Select "**Restore Default OS**". The system will test your hardware automatically. Once the process is complete, click "**Start**" button to perform the system recovery function. This process will reformat the primary hard drive. **Please back up your data before performing the recovery process.**

6. Once completed, click the "**Close**" button. The system will return to the main menu of the Elo Recovery Solution. Then click the "**Exit**" button to restart your system.

Note: All data is deleted during the recovery process. The user must back up files when necessary. Elo Touch Solutions does not accept liability for lost data or software.

Note: The end user must adhere to Microsoft's Licensing Agreement.

Section 4: Options and Upgrades

Adding Optional Upgrades

Elo has qualified the following to work seamlessly with your unit. The complete installation and setup instructions are provided with the field-installable kits. Please see your Elo authorized distributor or value-added partner for pricing.

- 8GB 5600MHz DDR5 SO-DIMM (E466053)
- 16GB 5600MHz DDR5 SO-DIMM (E466237)
- 32GB 5600MHz DDR5 SO-DIMM (E466430)
- M.2 PCIe (NVMe) 128GB SSD (E466613)
- M.2 PCIe (NVMe) 256GB SSD (E466803)

Note: Changing SO-DIMM or SSD requires opening the back cover. Special care must be taken when removing and replacing the back cover to prevent losing the IP rating or possibly damaging the touch computer. Please contact Elo technical support or product management.

Optional Peripherals KITs

The following optional accessories and spare parts are available for purchase from Elo Touch Solutions. Shown in parenthesis is the Elo orderable part number.

- **10" LCD Customer Display (10 touch – E045337) / 10" LCD Customer Display (no touch – E138394)**
  13" LCD Customer Display (10 touch – E683595)
  - To ensure the best display experience and compatibility, only use Elo authorized USB-C cables with this touch computer system.
- **Magnetic Stripe Reader (E001002)**
  - MSR with USB interface for this touch computer system.
- **Rear-Facing Customer Display Kit (E001003)**
  - The vacuum fluorescent display (VFD) with USB interface for this touch computer system.
- **Biometric Fingerprint Reader (E134286)**
  - Fingerprint reader with USB interface for this touch computer system.
- **Elo Edge Connect™ Webcam (E201494)**
  - 2D Web Camera with USB interface for this touch computer system.
- **Elo Edge Connect™ 3D Camera (E134699)**
  - 3D Camera with USB interface for this touch computer system.
- **Elo Edge Connect™ Status Light (E644767)**
  - Status Light with USB interface for this touch computer system.
- **2D Scanner Barcode Scanner (E384627/E245047/E393160)**

- 2D Barcode Scanner with USB interface for this touch computer system.

- **Elo Edge Connect™ RFID (E673037)**
  - NFC Reader (RFID) with USB interface for this touch computer system.
- **EMV Cradle for eDynamo (E375343)**
  - The EMV Cradle Kit is designed for a MagTek eDynamo device for this touch computer system.
- **EMV Cradle for Ingenico RP457c with BT and USB (E710930)**
  - The EMV Cradle Kit is designed for an Ingenico RP457c device for this touch computer system.
- **EMV Cradle for Ingenico RP457c with Audio Jack, BT and USB (E586981)**
  - The EMV Cradle Kit is designed for an Ingenico RP457c device for this touch computer system.
- **6 ft Elo authorized USB-C cable (E710364) / 2 ft Elo authorized USB-C cable (E969524)**
  - Order this authorized cable for remote mounting options to ensure display quality and compatibility on Elo USB-C monitors.
- **24V 180W Power Brick Kit (E845269)**
  - The 24V 180W Power Brick Kit is designed for this touch computer system.
- **I-Series 3, 15”/15.6” AiO Stand (E466998)**
  - The 15”/15.6” AiO Stand is designed for this touch computer system.
- **I-Series 3, 17”/21.5” AiO Stand (E467190)**
  - The 17”/21.5” AiO Stand is designed for this touch computer system.

Note: When a 2nd display monitor is installed but it does not have a USB-C port, you will need to purchase a USB-C to HDMI cable in order to connect to this touch computer system. Elo has qualified USB-C to HDMI adapters listed below. Please go to your local retailers to purchase these cables.

- **Uni USB-C to HDMI Cable (4K@60Hz)**
- **Cable Creation USB-C to HDMI Cable (4K@60Hz)**

Section 5: Technical Support

If you are experiencing trouble with your touchscreen computer, refer to the following suggestions. If the problem persists, please contact your local dealer or Elo Customer Service. Worldwide technical support phone numbers are available on the last page of this user manual.

Solutions to Common Problems

Problem	Suggested Troubleshooting
No Power (The touch computer system won't power up)	1. Check that the AC/DC power adaptor is properly connected. 2. Verify the AC power source is functioning. 3. Make sure the power button is not broken
No Display (Display is black)	1. If the Power Status LED is orange/red, the unit may be in SLEEP/HIBERNATE mode. Press the power button to see if the display comes back. 2. Check the internal cable connections and look for missing or damaged electrical components.
No Bootable Device Found	1. Confirm the product has loaded the OS. 2. Storage device damage - Try to swap with another new blank drive
Abnormal/No Touch Function	1. Check the touch device presents in Windows Device Manager 2. Power off the system and power on again 3. Make sure there is not damage to the touch screen

Technical Assistance

Technical Specifications

Visit **www.elotouch.com/products** for technical specifications for this device

Support

Visit **http://support.elotouch.com/TechnicalSupport/** for technical support

See this user manual's last page for worldwide technical support phone numbers.

Image Sticking

What is Image Sticking? What Causes Image Sticking?

Image persistence, image burn-in, and image sticking are terms used to describe LCD image retention. LCD image retention occurs when a fixed pattern is displayed over a prolonged period of time. The fixed pattern causes a parasitic capacitance to build up within the LCD component, which prevents the liquid crystal molecules from returning to their normal relaxed state.

All LCDs/CRTs and color plasma displays are susceptible to image retention, at varying degrees. Phosphor based display devices, such as CRTs and color plasma displays are most susceptible, and image retention on phosphor-based devices is often irreversible. Transmissive devices, such as LCDs are less susceptible, and in most cases LCD image retention can be reversed.

The rate of image sticking depends on the image pattern, duration of fixed image, the temperature, and production variations. Likewise, the rate of diffusion of the image sticking (recovery time) also depends on these factors.

What Can Be Done about It?

The best way to avoid image burn-in is to limit the amount of static content on the display. Image sticking may be avoided by turning the display off periodically for a period of time between 2 to 4 hours.

To reduce the possibility of image retention, we recommend:

Displaying alternating black/white images for 2 to 4 hours
Using a screen saver when the touchscreen is not in use

Image retention caused by static (non-moving) images displayed for lengthy periods (image burn-in) is not covered under Elo warranty.

Section 6: Safety & Maintenance

Safety

- To avoid the risk of electric shock, follow all safety notices and do not disassemble the touch computer. They are not user serviceable.
- Do not block or insert anything inside the ventilation slots.
- The Elo touch computer system is equipped with an AC/DC power adaptor. Do not use a damaged AC/DC power adaptor. Use only the AC/DC power adaptor supplied by Elo for touch computer system. Use of an unauthorized AC/DC power adaptor may void your warranty.
- Ensure that the system is maintained and runs within the specified environmental conditions listed below.
- The equipment power supply cord shall be connected to a socket-outlet with earthing connection.
- Risk of Explosion if Battery is replaced by an Incorrect Type. Dispose of Used Batteries According to the Instructions
- Be sure to disconnect the power source before disassembling the equipment. The enclosure must be completely assembled while restoring the power input. Wait one-half hour after switching off before handling parts.

Environmental conditions for operating and storage

Temperature:

Operating	0°C to 35°C
Storage	-30°C to 60°C

Humidity (non-condensing):

Operating	20% to 80%
Storage	5% to 95%

Altitude:

Operating	0 to 3,048 m
Storage	0 to 12,192 m

Power ratings

24 volts, 7.5 Amps max

Ingress Protection

IP54 - Under the following conditions:

Keep all connector and peripheral covers tightly sealed. Power brick doesn't comply with IP54 rating.
IP54 compliant in landscape orientation only, and not when mounted face-up or face-down.

Note: The thermal report pass airflow 0.5m/s + CPU Minimum assured power condition. For non-OS SKUs, recommend installing the Elo optimize TDP tool for better performance.

Power Adaptor Support Notice

The following notice will help with the application when you use the Power USB function of your Elo touch computer system.

- Do not exceed a total of 180 watts. Take the wattage below and add the Elo Peripherals or your other devices and check that you are under 180 watts. If you need help with the power requirements for your application, please contact Elo support to help you with the set up and calculations. **(Note: the below table condition, 15”/21.5” i5 and all sizes of i7 with 16GB DIMM/256GB SSD, others with 8GB DIMM/128GB SSD)**

Max Power Consumption (without peripherals)	ESY15i2C: 34W ESY17i2C: 33W ESY22i2C: 39W ESY24i2C: 40W	ESY15i3C: 49W ESY17i3C: 47W ESY22i3C: 51W ESY24i3C: 52W	ESY15i5C: 50W ESY17i5C: 50W ESY22i5C: 57W ESY24i5C: 56W	ESY15i7C: 50W ESY17i7C: 54W ESY22i7C: 56W

- The Elo PNs corresponding power adaptor model name list is below table.

Configuration	ELO PN	Part Description
All models	E511572	AIO POWER BRICK , 24V 180W , DELTA
All models	E167926	AIO POWER BRICK , 24V 180W , BILLION

Care and Handling

The following tips will help keep your touch computer functioning at an optimal level:

- Disconnect the AC power cable before cleaning.
- To clean the unit (except touchscreen), use a clean cloth lightly dampened with a mild detergent.
- It is important that your unit remains dry. Do not get liquids on or inside the unit. If liquid does get inside, turn the unit offandhave a qualified service technician checks it before you power it on again.
- Do not wipe the screen with a cloth or sponge that could scratch the surface.
- To clean the touchscreen, use window or glass cleaner applied to a clean cloth or sponge. Never apply the cleaner directly to the touchscreen. Do not use alcohol (methyl, ethyl or isopropyl), thinner, benzene, or other abrasive cleaners.
- Ensure the environmental temperature and humidity are maintained within specifications and do no block ventilation slots.
- Touch computers are not designed for outdoors.

Waste Electrical & Electronic Equipment Directive (WEEE)

This product should not be disposed of with household waste. It should be deposited at a facility that enables recovery and recycling. Ensure that product is disposed at the end of its useful life according to local laws and regulations. Elo has put in place recycling arrangements in certain parts of the world. For information on how you can access these arrangements, please visit.

https://www.elotouch.com/e-waste-recycling-program

UL Directive

The touch computer has a lithium battery included on the motherboard. There is a risk of explosion if battery is replaced by an incorrect type. Please dispose of used batteries according to the region instructions.

Warning

- It is important that your touch computer remains dry. Do not pour liquid into or onto your touch computer. If your touch computer becomes wet, do not attempt to repair it yourself. Contact Elo Customer Service for instructions.
- Overusing the touch computer may damage your eye vision.
- Please take a rest for 10 minutes when you use the system 30 minutes.
- Children less than two years old do not look at the screen directly; children over two years old do not look at the screen more than one hour per day.

Section 7: Regulatory Information

Electrical Safety Information

Compliance is required with respect to the voltage, frequency, and current requirements indicated on the manufacturer's label. Connection to a different power source than those specified herein will likely result in improper operation, damage to the equipment or pose a fire hazard if the limitations are not followed.

There are no operator serviceable parts inside this equipment. There are hazardous voltages generated by this equipment which constitute a safety hazard. Service shall be provided only by a qualified service technician.

Contact a qualified electrician or the manufacturer if there are questions about the installation prior to connecting the equipment to mains power.

Emissions and Immunity Information

Notice to Users in the United States for FCC compliance:

This device complies with part 15 of the FCC Rules. Operation is subject to the following two conditions:

(1) This device may not cause harmful interference, and (2) this device must accept any interference received, including interference that may cause undesired operation of the device.

Changes or modifications not expressly approved by the party responsible for compliance could void the user 's authority to operate the equipment.

NOTE: This equipment has been tested and found to comply with the limits for a Class B digital device, pursuant to part 15 of the FCC Rules. These limits are designed to provide reasonable protection against harmful interference in a residential installation. This equipment generates, uses and can radiate radio frequency energy and, if not installed and used in accordance with the instructions, may cause harmful interference to radio communications. However, there is no guarantee that interference will not occur in a particular installation. If this equipment does cause harmful interference to radio or television reception, which can be determined by turning the equipment off and on, the user is encouraged to try to correct the interference by one or more of the following measures:

—Reorient or relocate the receiving antenna.

—Increase the separation between the equipment and receiver.

—Connect the equipment into an outlet on a circuit different from that to which the receiver is connected.

—Consult the dealer or an experienced radio/TV technician for help.

This equipment should be installed and operated to ensure a minimum of 20 cm spacing to any person.

Notice to Users in Canada for IC compliance:

This equipment complies with the Class B limits for radio noise emissions from digital apparatus as established by the Radio Interference Regulations of Industrial Canada.

CAN ICES-003(B)/NMB-003(B)

This device contains licence-exempt transmitter(s)/receiver(s) that comply with Innovation, Science and Economic Development Canada's licence-exempt RSS(s). Operation is subject to the following two conditions:

(1) This device may not cause interference.
(2) This device must accept any interference, including interference that may cause undesired operation of the device.

L'émetteur/récepteur exempt de licence contenu dans le présent appareil est conforme aux CNR d'Innovation, Sciences et Développement économique Canada applicables aux appareils radio exempts de licence. L'exploitation est autorisée aux deux conditions suivantes :

(1) L'appareil ne doit pas produire de brouillage;
(2) L'appareil doit accepter tout brouillage radioélectrique subi, même si le brouillage est susceptible d'en compromettre le fonctionnement.

Notice to Users in the European Union:

Use only the provided power cords and interconnecting cabling provided with the equipment. Substitution of provided cords and cabling may compromise electrical safety or CE Mark Certification for emissions or immunity as required by the following standards:
This Information Technology Equipment (ITE) is required to have a CE Mark on the Manufacturer's label which means that the equipment has been tested to the following Directives and Standards: This equipment has been tested to the requirements for the CE Mark as required by EMC Directive 2014/30/ EU as indicated in European Standard EN 55032 Class B and the Low Voltage Directive 2014/35/EU as indicated in European Standard EN 60950-1.

General Information to all Users:

This equipment generates, uses and can radiate radio frequency energy. If not installed and used according to this manual the equipment may cause interference with radio and television

communications. There is, however, no guarantee that interference will not occur in any particular installation due to site-specific factors.

1. In order to meet emission and immunity requirements, the user must observe the following:
   a. Use only the provided I/O cables to connect this digital device with any computer.
b. To ensure compliance, use only the provided manufacturer's approved line cord.
   c. The user is cautioned that changes or modifications to the equipment not expressly approved by the party responsible for compliance could void the user's authority to operate the equipment.

2. If this equipment appears to cause interference with radio or television reception, or any other device:
   a. Verify as an emission source by turning the equipment off and on. If you determine that this equipment is causing the interference, try to correct the interference by using one or more of the following measures:

      i. Move the digital device away from the affected receiver.
      ii. Reposition (turn) the digital device with respect to the affected receiver.
      iii. Reorient the affected receiver's antenna.
      iv. Plug the digital device into a different AC outlet so the digital device and the receiver are on different branch circuits.
      v. Disconnect and remove any I/O cables that the digital device does not use. (Unterminated I/O cables are a potential source of high RF emission levels.)
      vi. Plug the digital device into only a grounded outlet receptacle. Do not use AC adapter plugs. (Removing or cutting the line cord ground may increase RF emission levels and may also present a lethal shock hazard to the user.)

If you need additional help, consult your dealer, manufacturer, or an experienced radio or television technician.

Classification of Certificate

Configuration	Classification	Documentation
All Models	Class B	MD600153 DECLARATIONS OF CONFORMITY, I-Series 3 with Intel®

この装置は、クラスB機器です。この装置は、住宅環境で使用することを目的としていますが、この装置がラジオやテレビジョン受信機に近接して使用されると、受信障害を引き起こすことがあります。
取扱説明書に従って正しい取り扱いをして下さい。 VCCI－B

Radio Equipment Directive

Elo hereby declares that the radio equipment type, Elo POS, is in compliance with Directive 2014/53/EU. The full text of the EU Declaration of Conformity is available at the following internet address: www.elotouch.com

This device is designed and intended for indoor use only.

	AT	BE	BG	HR	CY	CZ	DK
	EE	FI	FR	DE	EL	HU	IE
	IT	LV	LT	LU	MT	NL	PL
	PT	RO	SK	SI	ES	SE	UK(NI)
	CH	TR	NO				
	UK						

Operation frequency and radio-frequency power are listed as below:

- o WLAN 802.11b/g/n/ax 2400MHz-2483.5MHz ≤ 20 dBm

  WLAN 802.11a/n/ac/ax 5150MHz-5725MHz <23 dBm

  WLAN 802.11a/n/ac/ax 5725MHz-5825MHz <13.98 dBm

  WLAN 802.11ax 59450MHz-6425MHz <23 dBm

- o Bluetooth BREDRLE 2400MHz-2483.5MHz ≤ 20 dBm

ECC/DEC/ (04)08:

The use of the frequency band 5150-5350 MHz, 5350-6425 MHz is restricted to indoor operation because of the protection requirements of satellite services.

EC R&TTE Directive

EU Directive 2014/53/EU of the European Parliament and of the Council of 16 April 2014 on the harmonization of the laws of the Member States relating to the making available on the market of radio equipment and repealing Directive 1999/5/EC Text with EEA relevance.

Identification mark
The relevant technical documentation is held at: Elo Touch Solutions, Inc.
670 N. McCarthy Boulevard Suite 100
Milpitas, CA 95035
USA.

USA
Contains FCC TX ID: PD9AX210NG

Canada
Contains IC ID: 1000M-AX210NG

Japan
RF :003-220254 TEL :D220163003

電波法により5GHz帯は屋内使用に限ります。

Argentina
CNC: C-25568

Brazil

Incorpora produto homologado pela ANATEL sob o número 14242-20-04423.
Este equipamento não tem direito ã proteção contra interferência e não pode causar interferência em sistemas devidamente autorizados.
Para mais informações, consulte o site da Anatel: https://www.gov.br/anatel/pt-br"

"Este equipamento deve ser conectado obrigatoriamente em tomada de rede de energia elétrica que possua aterramento (três pinos), conforme a Norma de instalações elétricas ABNT NBR 5410, visando a segurança dos usuários contra choques elétricos".

RF Exposure Information (SAR)
This device has been tested and meets applicable limits for Radio Frequency (RF) exposure. Specific Absorption Rate (SAR) refers to the rate at which the body absorbs RF energy. Tests for SAR are conducted using standard operating positions with the device transmitting at its highest certified power level in all tested frequency bands. This device was tested with a separation distance of **20cm**. Always keep this device away from your body to ensure exposure levels remain at or below the as-tested levels.

Energy Star Certificate

I-Series 3 with Intel® can meet Energy Star 8.0 requirements with certain configurations, please contact Elo technical support or product management.
Below SKUs can meet Energy Star 8.0 requirements.

Part Number	Description	UPC
E606511	ESY15i5-2UWD-0-MT-ZB-8G-1S-WN-64-BK-NS	843173153278
E836250	ESY15i5-2UWD-0-MT-ZB-6G-2S-WN-64-BK-NS	843173160757
E706223	ESY15i5-2UWA-1-MT-8G-1S-WN-64-BK	843173154114
E608847	ESY24i5-2UWD-0-MT-ZB-8G-1S-WN-64-BK-NS	843173153391

ENERGY STAR is a program run by the U.S. Environmental Protection Agency (EPA) and U.S. Department of Energy (DOE) that promotes energy efficiency.
This product qualifies for ENERGY STAR in the "factory default" settings, Changing the factory default settings will increase power consumption that could exceed the limits necessary to qualify for ENERGY STAR rating.
For more information on the ENERGY STAR program, refer to energystar.gov.

6 September 2023

FCC Declaration of Conformity

Per FCC 47 CFR FCC Part15 subpart B Section 2.1077(a)
In accordance with FCC Rules and Regulations

Model Number:	ESY15iXC (X= 0-9)
Equipment Category:	Information Technology and Telecommunications Equipment
Equipment Class:	Commercial and Light Industrial
Product Name:	Touch All in one Computer
Manufacturer:	Elo Touch Solutions, Inc. 670 N. McCarthy Blvd. Suite 100 Milpitas, CA 95035 www.elotouch.com
Trademark:	elo

Declaration:

This device complies with Part 15 of the FCC Rules. Operation is subject to the following two conditions:
(1) This device may not cause harmful interference, and
(2) this device must accept any interference received, including interference that may cause undesired operation

Kevin Huang
Director, Systems Engineering
Elo Touch Solutions, Inc.

Agency Certifications

The following certifications and marks have been issued or declared for this system:

- United States UL, FCC
- Canada cUL, IC
- Germany, TUV
- Europe CE
- Australia RCM
- United Kingdom UKCA
- International CB
- Japan VCCI, MIC
- Argentina S-Mark
- Brazil ANATEL
- Mexico NOM
- China CCC, SRRC
- RoHS CoC
- Energy Star 8.0 configurations are available, please contact Elo directly.
- New Zealand R-NZ
- Singapore IMDA for 15i5C only

Explanation of Markings

1. In accordance with the SJ/T11364-2006 requirement, the electronic information products are marked with the following pollution control logo. The Environment-Friendly Use Period for this product is 10 years. The product will not leak or mutate under normal operating conditions listed below, so that the use of this electronic information product will not result in any severe environmental pollution, any bodily injury, or damage to any assets.

   Operating Temperature: 0-35 / Humidity: 20%-80% (non-condensing).
   Storage Temperature: -20~60 / umidity:10%~95% (non-condensing).

2. It is encouraged and recommended that this product be recycled and reused according to local laws. The product should not be thrown away casually.

China RoHS

According to the Chinese law "Administrative Measures for the Restricted Use of Hazardous Substances in Electrical and Electronic Products", this section will list the names and contents of hazardous substances that may be contained in this product.

Component Name	Toxic or Hazardous Substances and Elements					
	Lead (Pb)	**Mercury (Hg)**	**Cadmium(Cd)**	**Hexavalent Chromium (Cr6+)**	**Polybrominated Biphenyls (PBB)**	**Polybrominated Diphenyl Ethers (PBDE)**
Plastic Parts	O	O	O	O	O	O
Metal Parts	X	O	O	O	O	O
Wire and Cable	X	O	O	O	O	O
LCD Panel	X	O	O	O	O	O
Touch Screen Panel	X	O	O	O	O	O
PCBA	X	O	O	O	O	O
Software (CD, etc.)	O	O	O	O	O	O

中国 RoHS 认证

根据中国法律《电器电子产品有害物质限制使用管理办法》，本节将列出本产品可能含有的有害物质的名称和含量。

部件名称	有害物质					
	铅 (Pb)	汞 (Hg)	镉 (Cd)	六价铬(Cr6+)	多溴联苯(PBB)	多溴联苯醚(PBDE)
塑料部件	O	O	O	O	O	O
金属零件	X	O	O	O	O	O
电线和电缆组件	X	O	O	O	O	O
液晶显示面板	X	O	O	O	O	O
触控屏面板	X	O	O	O	O	O
PCBA	X	O	O	O	O	O
软件（CD 等）	O	O	O	O	O	O

本表格依据 SJ/T 11364 的规定编制。

O：表示该有害物质在该部件所有均质材料中的含量均在 GB/T 26572 规定的限量要求以下。

X：表示该有害物质至少在该部件的某一均质材料中的含量超出 GB/T 26572 规定的限量要求。

标志说明

(1) 根据 SJ/T11364 的要求，电子信息产品标有以下电子电气产品有害物质限制使用标识。 此产品在 10 年内不会对环境产生影响。

(2) 绿色产品标识

Section 8: Warranty Information

For warranty information, go to http://support.elotouch.com/warranty/

www.elotouch.com

Visit our website for the latest.

- Product Information
- Specifications
- Upcoming Events
- Press Releases
- Software Drivers
- Touch Monitor Newsletter

To find out more about our extensive range of Elo touch solutions, go to www.elotouch.com, or call the office nearest you.

Americas
Tel +1 408 597 8000
elosales.na@elotouch.com

Europe (EMEA)
Tel +32 16 930 136
elosales@elotouch.com

Asia-Pacific
Tel +86 (21) 3329 1385
www.elotouch.com.cn

© 2025 Elo Touch Solutions, Inc. All rights reserved.