INSTALLATION INSTRUCTIONS

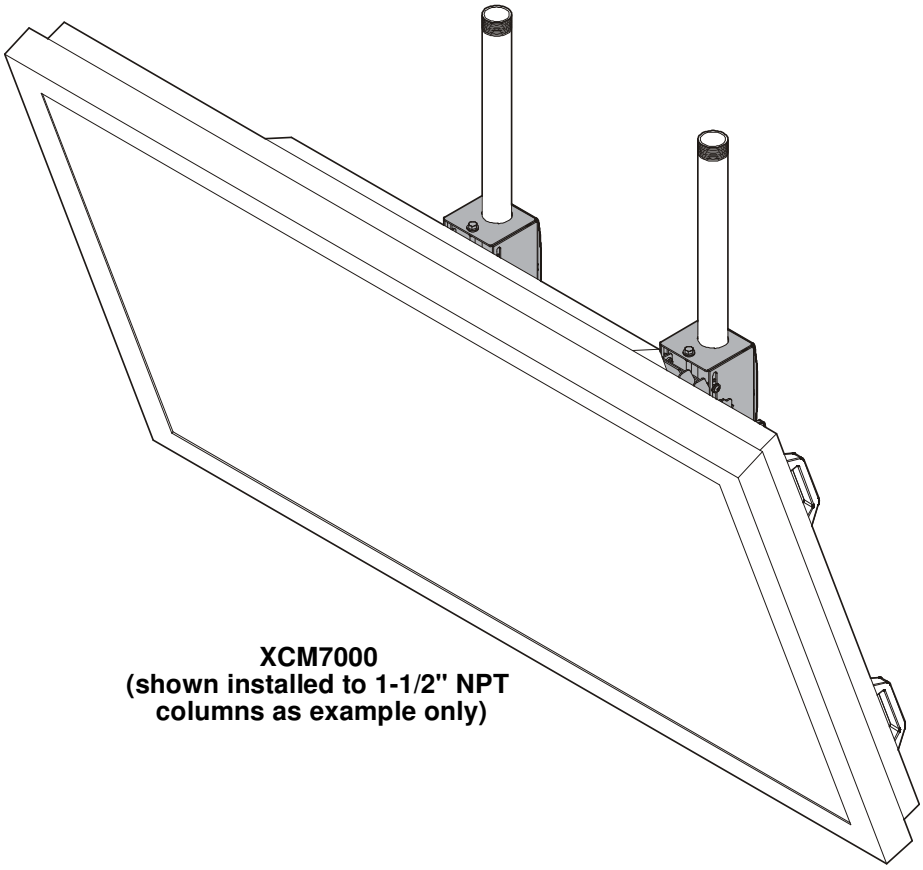

XCM7000
(shown installed to 1-1/2" NPT columns as example only)

Extra Large Dual Column Ceiling Mount

CHIEF®
Our Mounts. **Your Vision.**

XCM7000

DISCLAIMER

Milestone AV Technologies and its affiliated corporations and subsidiaries (collectively "Milestone"), intend to make this manual accurate and complete. However, Milestone makes no claim that the information contained herein covers all details, conditions or variations, nor does it provide for every possible contingency in connection with the installation or use of this product. The information contained in this document is subject to change without notice or obligation of any kind. Milestone makes no representation of warranty, expressed or implied, regarding the information contained herein. Milestone assumes no responsibility for accuracy, completeness or sufficiency of the information contained in this document.

Chief® is a registered trademark of Milestone AV Technologies. All rights reserved.

DEFINITIONS

MOUNTING SYSTEM: A MOUNTING SYSTEM is the primary Chief product to which an accessory and/or component is attached.

ACCESSORY: AN ACCESSORY is the secondary Chief product which is attached to a primary Chief product, and may have a component attached or setting on it.

COMPONENT: A COMPONENT is an audiovisual item designed to be attached or resting on an accessory or mounting system such as a video camera, CPU, screen, display, projector, etc.

WARNING: A WARNING alerts you to the possibility of serious injury or death if you do not follow the instructions.

CAUTION: A CAUTION alerts you to the possibility of damage or destruction of equipment if you do not follow the corresponding instructions.

IMPORTANT SAFETY INSTRUCTIONS

WARNING: Failure to read, thoroughly understand, and follow all instructions can result in serious personal injury, damage to equipment, or voiding of factory warranty! It is the installer's responsibility to make sure all mounting systems are properly assembled and installed using the instructions provided.

WARNING: Failure to provide adequate structural strength for this mounting system can result in serious personal injury or damage to equipment! It is the installer's responsibility to make sure the structure to which this mounting system is attached can support five times the combined weight of all equipment. Reinforce the structure as required before installing the mounting system.

WARNING: Exceeding the weight capacity can result in serious personal injury or damage to equipment! It is the installer's responsibility to make sure the combined weight of all components located within the mounting system of the XCM7000 does not exceed a maximum weight capacity of 300 lbs (136.1 kg).

WARNING: Use this mounting system only for its intended use as described in these instructions. Do not use attachments not recommended by the manufacturer.

WARNING: Never operate this mounting system if it is damaged. Return the mounting system to a service center for examination and repair.

WARNING: Do not use this product outdoors.

NOTE: The XCM7000 dual column ceiling mounts are intended to be used with the UL Listed CPA extension columns and UL Listed CPA Ceiling Plates (not included): CPA330, CPA365, CPA395.

The following UL Listed Chief ceiling plates WITHOUT swaged collars (not included) may also be used: CMA330, CMA345, CMA395.

--SAVE THESE INSTRUCTIONS--

DIMENSIONS

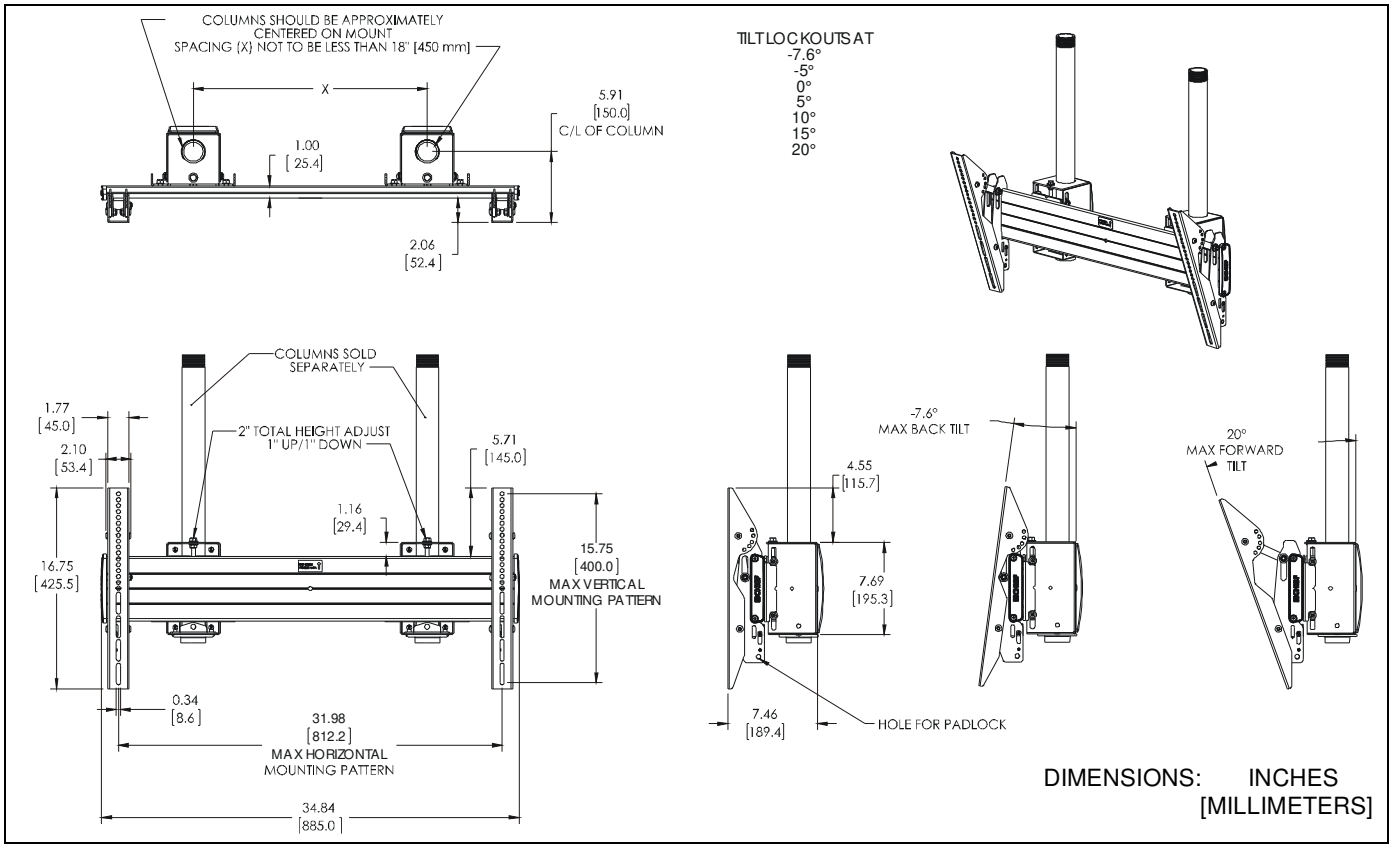
COLUMNS SHOULD BE APPROXIMATELY CENTERED ON MOUNT SPACING (X) NOT TO BE LESS THAN 18" [450 mm]
X
5.91 [150.0] C/L OF COLUMN
1.00 [25.4]
2.06 [52.4]
TILT LOCKOUTS AT
-7.6°
-5°
0°
5°
10°
15°
20°
COLUMNS SOLD SEPARATELY
1.77 [45.0]
2.10 [53.4]
2" TOTAL HEIGHT ADJUST 1" UP/1" DOWN
5.71 [145.0]
1.16 [29.4]
16.75 [425.5]
15.75 [400.0] MAX VERTICAL MOUNTING PATTERN
0.34 [8.6]
31.98 [812.2] MAX HORIZONTAL MOUNTING PATTERN
34.84 [885.0]
4.55 [115.7]
7.69 [195.3]
7.46 [189.4]
HOLE FOR PADLOCK
-7.6° MAX BACK TILT
20° MAX FORWARD TILT
DIMENSIONS: INCHES [MILLIMETERS]

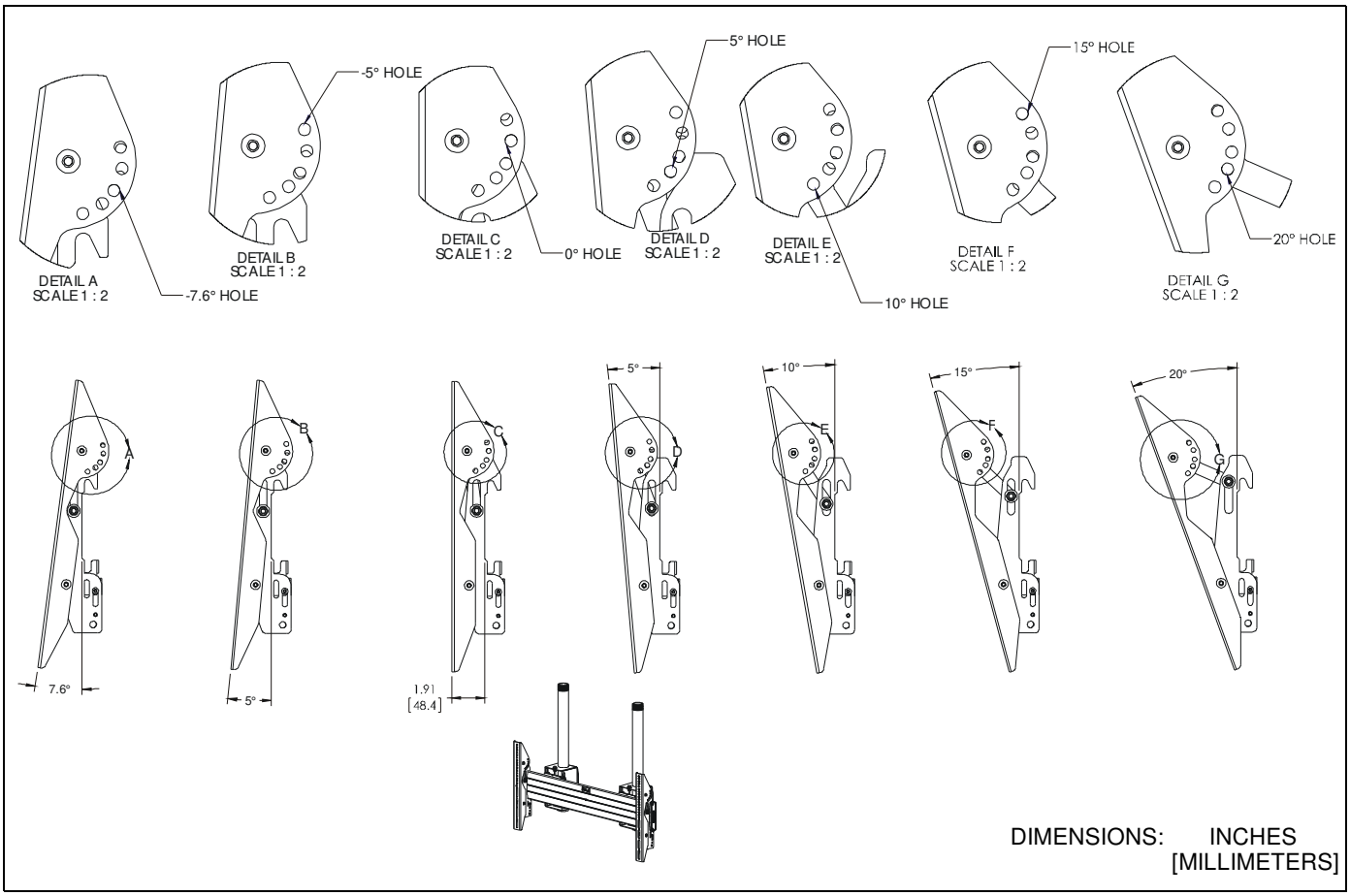
DETAIL A SCALE 1 : 2
-7.6° HOLE
DETAIL B SCALE 1 : 2
-5° HOLE
DETAIL C SCALE 1 : 2
0° HOLE
DETAIL D SCALE 1 : 2
5° HOLE
DETAIL E SCALE 1 : 2
10° HOLE
DETAIL F SCALE 1 : 2
15° HOLE
DETAIL G SCALE 1 : 2
20° HOLE
A
B
C
D
E
F
G
7.6°
5°
1.91 [48.4]
5°
10°
15°
20°
DIMENSIONS: INCHES [MILLIMETERS]

LEGEND

	Tighten Fastener
	Apretar elemento de fijación
	Befestigungsteil festziehen
	Apertar fixador
	Serrare il fissaggio
	Bevestiging vastdraaien
	Serrez les fixations

	Pencil Mark
	Marcar con lápiz
	Stiftmarkierung
	Marcar com lápis
	Segno a matita
	Potloodmerkteken
	Marquage au crayon

	Loosen Fastener
	Aflojar elemento de fijación
	Befestigungsteil lösen
	Desapertar fixador
	Allentare il fissaggio
	Bevestiging losdraaien
	Desserrez les fixations

	Drill Hole
	Perforar
	Bohrloch
	Fazer furo
	Praticare un foro
	Gat boren
	Percez un trou

	Phillips Screwdriver
	Destornillador Phillips
	Kreuzschlitzschraubendreher
	Chave de fendas Phillips
	Cacciavite a stella
	Kruiskopschroevendraaier
	Tournevis à pointe cruciforme

	Adjust
	Ajustar
	Einstellen
	Ajustar
	Regolare
	Afstellen
	Ajuster

	Open-Ended Wrench
	Llave de boca
	Gabelschlüssel
	Chave de bocas
	Chiave a punte aperte
	Steeksleutel
	Clé à fourche

	Remove
	Quitar
	Entfernen
	Remover
	Rimuovere
	Verwijderen
	Retirez

	By Hand
	A mano
	Von Hand
	Com a mão
	A mano
	Met de hand
	À la main

	Optional
	Opcional
	Optional
	Opcional
	Opzionale
	Optie
	En option

	Hex-Head Wrench
	Llave de cabeza hexagonal
	Sechskantschlüssel
	Chave de cabeça sextavada
	Chiave esagonale
	Zeskantsleutel
	Clé à tête hexagonale

	Security Wrench
	Llave de seguridad
	Sicherheitsschlüssel
	Chave de segurança
	Chiave di sicurezza
	Veiligheidssleutel
	Clé de sécurité

TOOLS REQUIRED FOR INSTALLATION

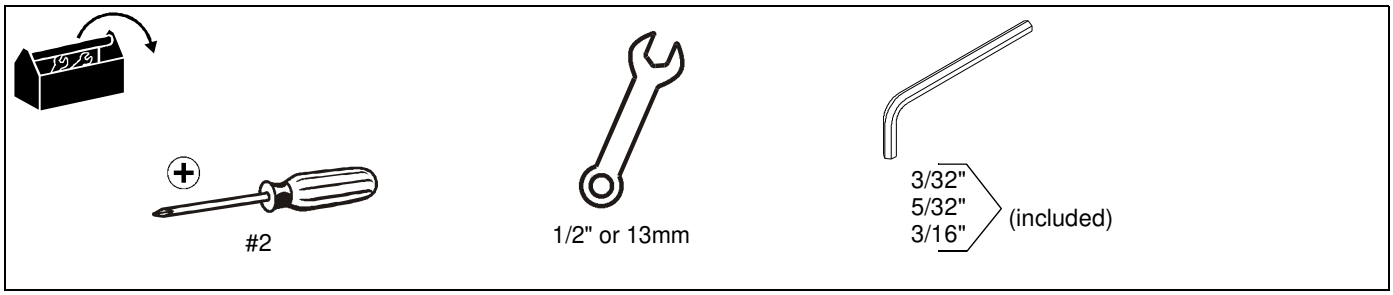

PARTS

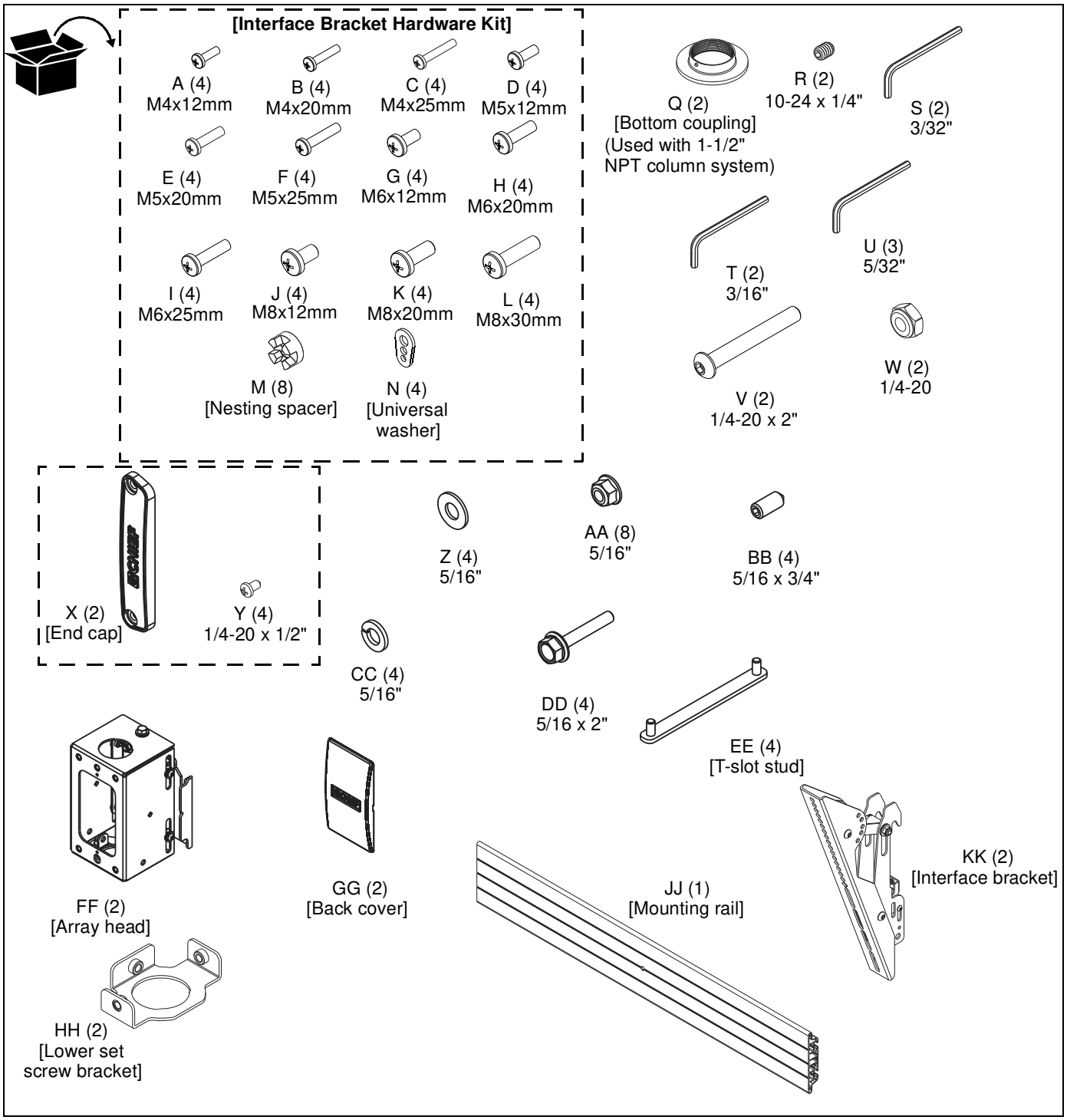

INSTALLATION

NOTE: The following procedure assumes that 2 UL Listed CPA or CMA ceiling plates (not included) and 2 extension columns (not included) have been properly installed following instructions provided with ceiling plates and extension columns.

- The ceiling plates and columns should be installed approximately centered on mount with spacing between columns to be **NO LESS** than 18". (See **Dimensions** drawings.)

IMPORTANT ! : The weight of the system should be evenly distributed across two ceiling plates.

NOTE: Proceed to **Attaching Mount to 1-1/2" NPT Column** section or **Attaching Mount to CPA Extension Column** section, as appropriate.

Attaching Mount to 1-1/2" NPT Column

1. Turn the array head (FF) upside down. (See Figure 1)
2. Remove **AND SAVE** two buttonhead screws from array head. (See Figure 1)
3. Remove and discard inner bracket from array head. (See Figure 1)

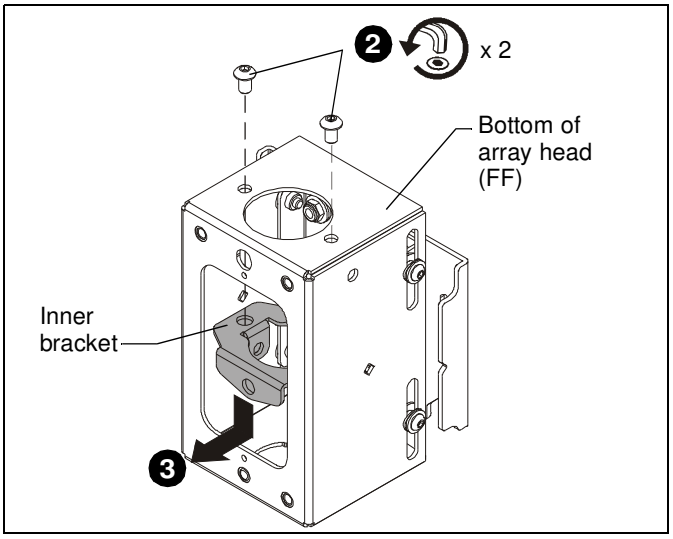

Figure 1

CAUTION: WATCH FOR PINCH POINTS! Do not place fingers between moveable parts.

4. Turn array head upright. (See Figure 2)
5. Turn adjustment bolt on top of array head to slide plate up and enlarge opening on front of array head. (See Figure 2)
6. Insert lower set screw bracket (HH) into array head (FF) with three tabs towards sides and back. (See Figure 2)
7. Fasten bracket (HH) into place in bottom of array head using buttonhead screws (removed in Step 2) through sides of array head and into side tabs of bracket (HH). (See Figure 2)
8. Slide plate (raised in Step 5) back into position by turning adjustment bolt on top of array head. (See Figure 2)
9. Repeat Steps 1 through 8 for remaining array head (FF).

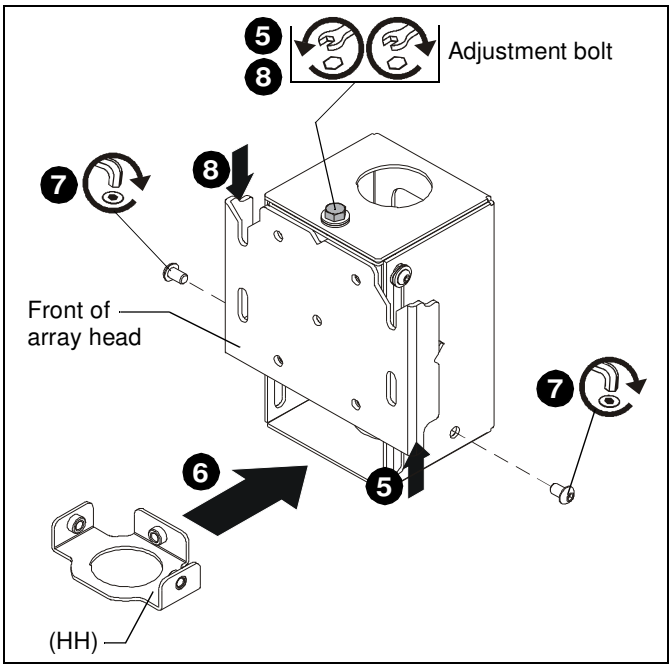

Figure 2

10. Slide array head (FF) up from below onto installed column (not included). (See Figure 3)
11. Thread bottom coupling (Q) onto installed column until tight, with a minimum of four threads engaged. (See Figure 3)
12. Install and tighten one 10-24 x 1/4" set screw (R) into bottom coupling (Q). (See Figure 3)

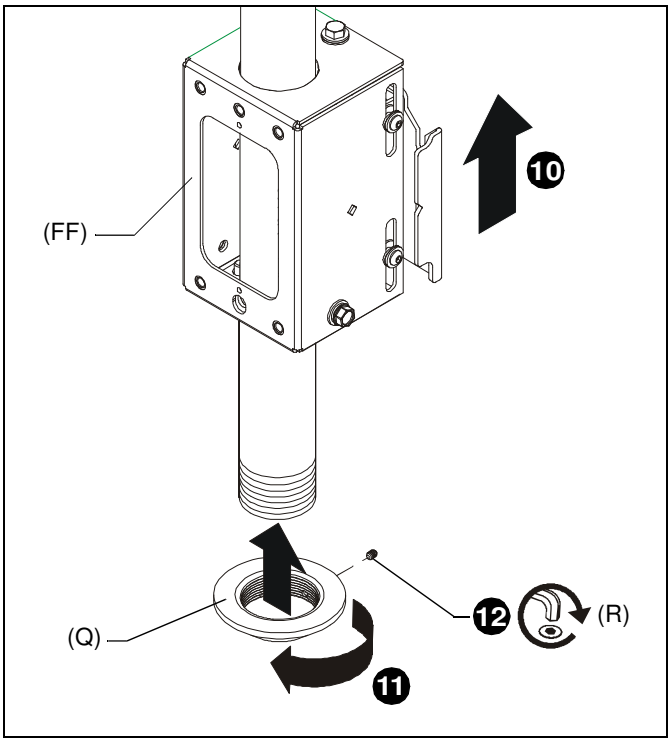

Figure 3

13. Repeat Steps 10 through 12 for remaining array head (FF), assuring that second array head is approximately level with first installed array head.

Attaching Mount to CPA Extension Column

CAUTION: WATCH FOR PINCH POINTS! Do not place fingers between moveable parts.

1. Slide array head (FF) up from below onto installed column (not included). (See Figure 4)
2. Line up holes in sides of array head (FF) with holes in column.

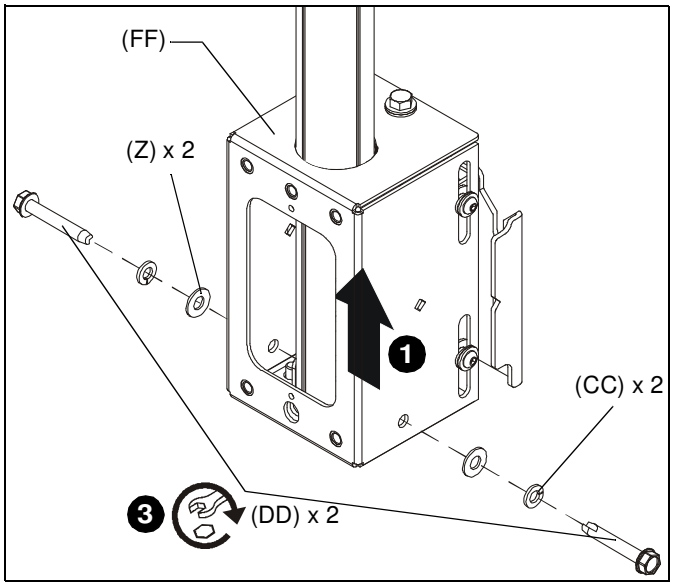

Figure 4

3. Install two 5/16" x 2" self-tapping screws (DD) through two 5/16" split washers (CC), two 5/16" flat washers (Z), sides of array head (FF), and into installed column. (See Figure 4)
4. Repeat Steps 1 through 3 for remaining array head (FF), assuring that second array head is approximately level with first installed array head.

Adding Mounting Rail

1. Slide four T-slot studs (EE - two in top mounting rail slot and two in bottom) into end of mounting rail (JJ). (See Figure 5)

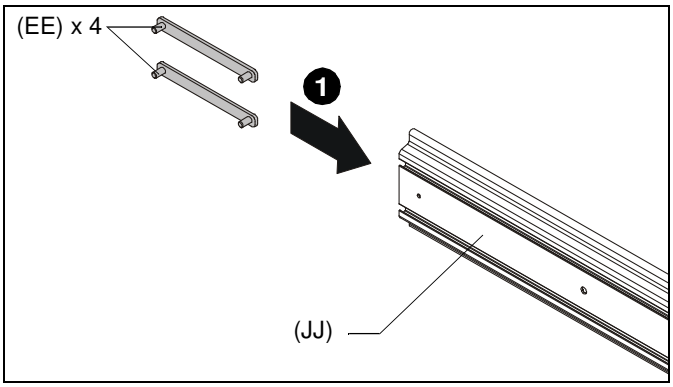

Figure 5

2. Partially fasten one 5/16" lock nut (AA) to each stud on **upper** T-slot studs.
3. Slide top T-slot studs (EE) with attached lock nuts (AA) down into top openings on array heads (FF). (See Figure 6)
4. Slide studs on lower T-slot studs (EE) into lower slots on array head (FF) while bringing mounting rail against array head.
5. Tighten array head to mounting rail by tightening lock nuts on upper T-slot studs and adding two 5/16" lock nuts (AA) to lower T-slot studs. (See Figure 6)

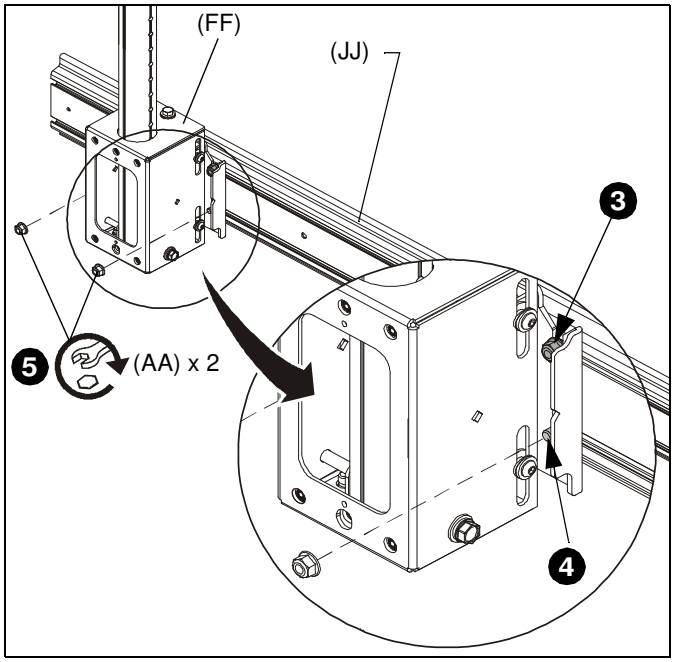

Figure 6

6. Repeat for remaining array head (FF).
7. Add one end cap (X) to each end of mounting rail, and fasten in place using two 1/4-20 x 1/2" Phillips self-tapping screws (Y) for each end cap. (See Figure 7)

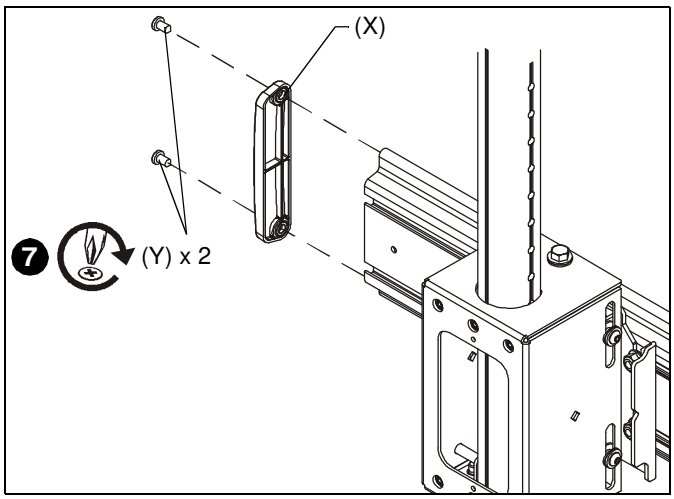

Figure 7

8. Tighten two 5/16" x 3/4" set screws (BB) against column. (See Figure 8)

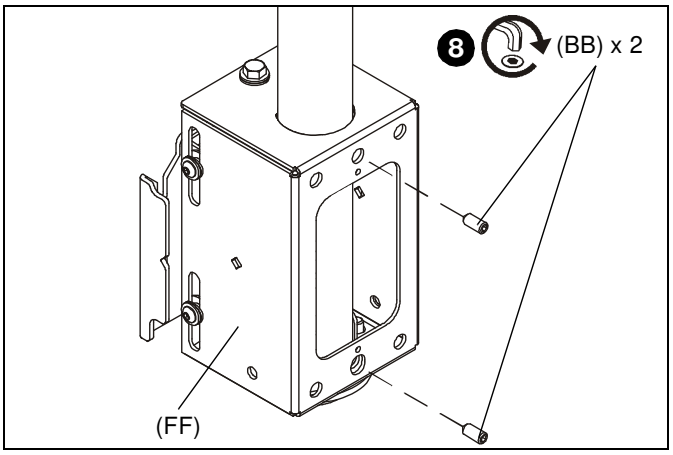

Figure 8

Attaching Interface Brackets to Displays

1. Lower the latch mechanism on each interface bracket (KK). (See Figure 9)

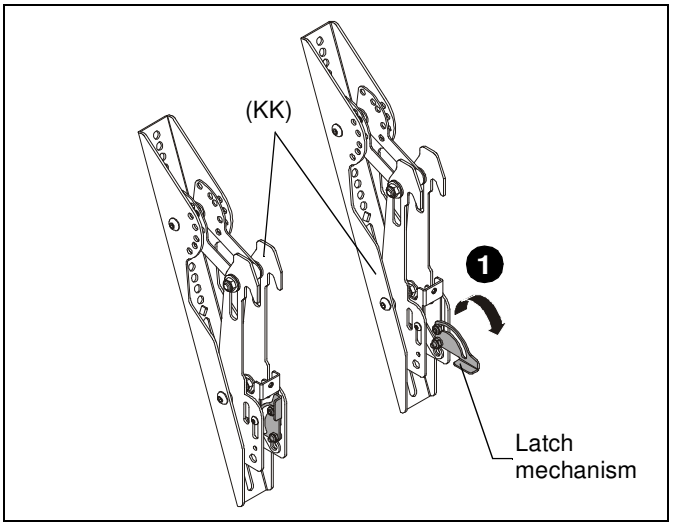

Figure 9

2. Align the center of the interface bracket (KK) with center of screen. (See Figure 10)

NOTE: The diamond-shape hole in the bracket corresponds to the center of the mount.

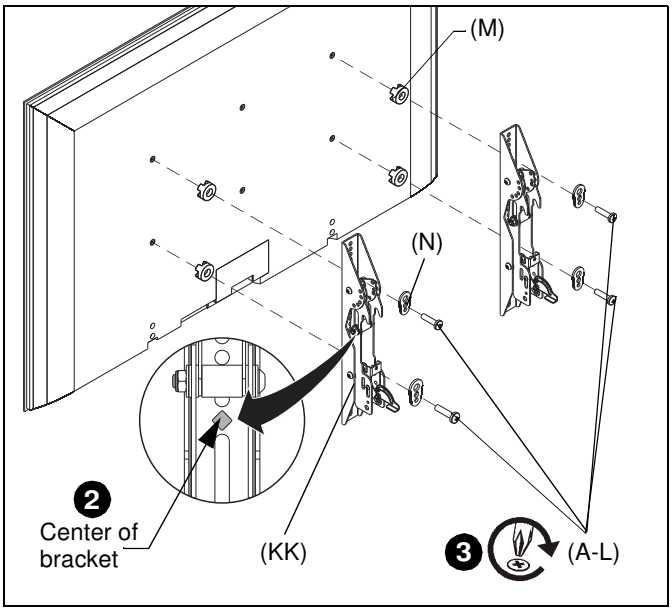

Figure 10

WARNING: IMPROPER INSTALLATION CAN LEAD TO DISPLAY FALLING CAUSING SERIOUS PERSONAL INJURY OR DAMAGE TO EQUIPMENT! Using screws of improper size may damage your display. Properly sized screws will easily and completely thread into display mounting holes. If spacers are required, be sure to use longer screws of the same diameter.

3. Select correct screws, spacers (if necessary) and universal washers from the hardware bag (A-N) and attach brackets (KK) to back of screen. (See Figure 10)

IMPORTANT ! : The M8 screws do **NOT** require a washer. Use the universal washer (N) only with M4, M5 and M6 screws.

NOTE: The nesting spacers (M) may be used separately, or put two together in different configurations to create different size spacers. (See Figure 11)

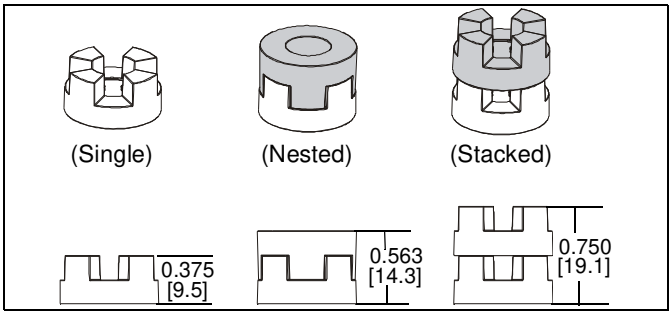

Figure 11

Attaching Displays to Mounting Rail

WARNING: Exceeding the weight capacity can result in serious personal injury or damage to equipment! It is the installer's responsibility to make sure the combined weight of all components located within the mounting system of the XCM7000 does not exceed a maximum weight capacity of 300 lbs (136.1 kg).

CAUTION: BEFORE adding display to the mounting rail, ensure end caps are in place at BOTH ends of mounting rail!

IMPORTANT ! : The interface bracket tilt may be adjusted either before or after adding display to mounting rail. See **Adjustments** section.

1. Ensure that the latch mechanisms on interface brackets (KK) are already lowered. (See Figure 9)
2. While supporting both sides of display, lower display onto center of ceiling mount, hooking top of interface brackets onto front of ceiling mount. (See Figure 12)
3. Raise the latch mechanism on both interface brackets to lock bracket in place. (See Figure 12)

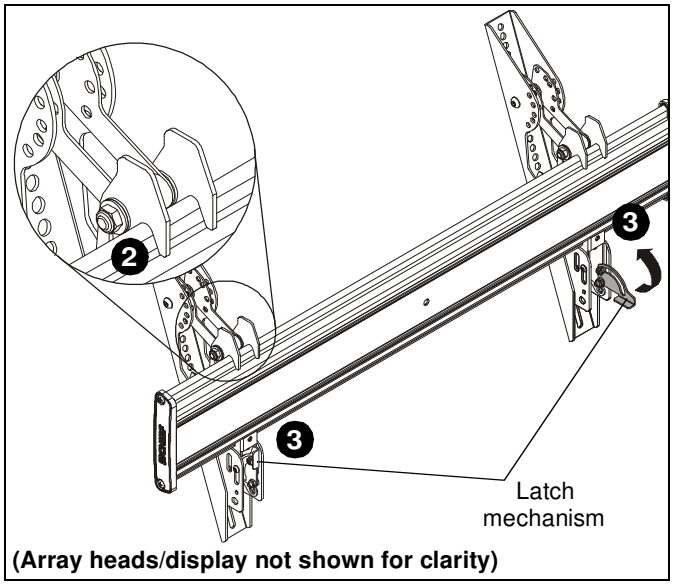

Figure 12

Adjustments

CAUTION: Watch for pinch points! Do not place fingers between moveable parts.

Height Adjustment and Leveling

The ceiling mounts allow up to 2 inches total adjustment.

1. Turn the adjustment bolt in the direction necessary to level or adjust height. (See Figure 13)
2. Stop adjusting when the desired setting is reached.

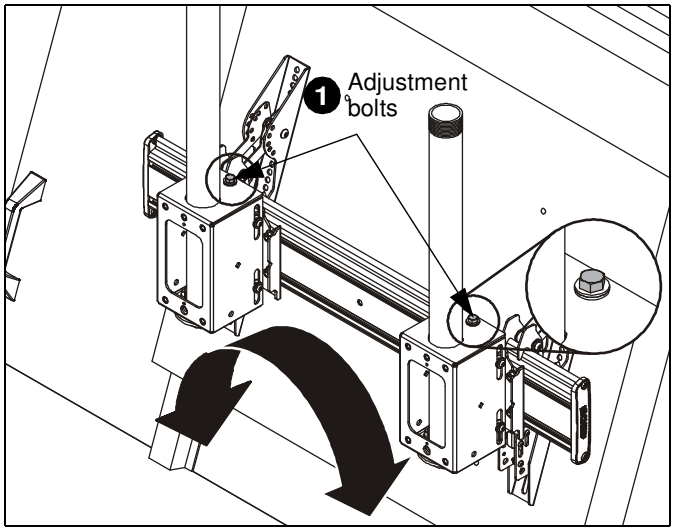

Figure 13

Tilt

NOTE: Two people will be required to adjust the tilt when the display is installed.

The interface brackets allow -7.6° to 20° tilt, and can be locked at -7.6°, -5°, 0°, 5°, 10°, 15° and 20° tilt.

1. Adjust tilt as required. (See Figure 14)
2. The tilt may be locked using one 1/4-20 x 2" button head screw (V) and one 1/4-20 lock nut (W) per interface bracket. (See Figure 14)
3. Repeat for remaining interface bracket.

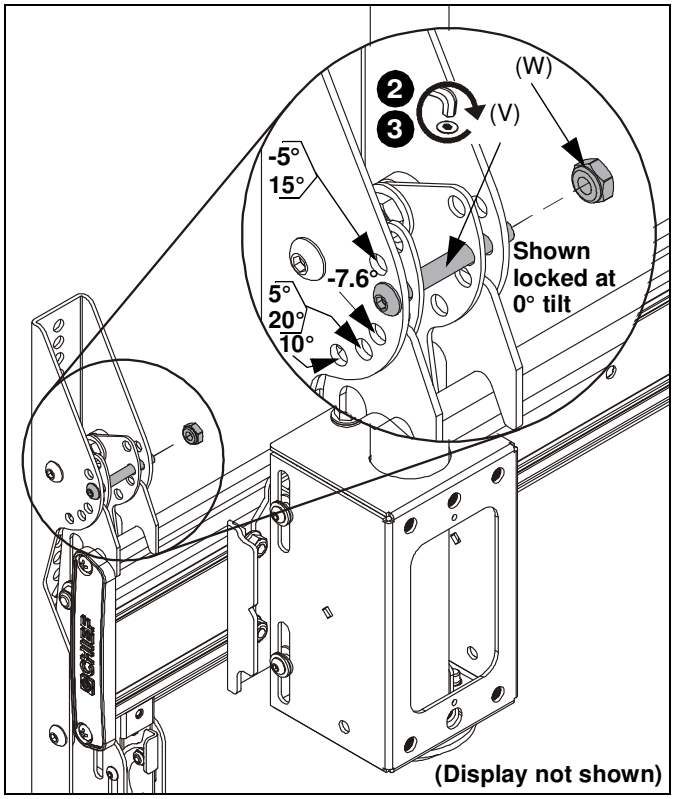

Figure 14

OPTIONAL: Security

1. **OPTIONAL**: Add padlock (not included) to each interface bracket to lock display to ceiling mount. (See Figure 15)

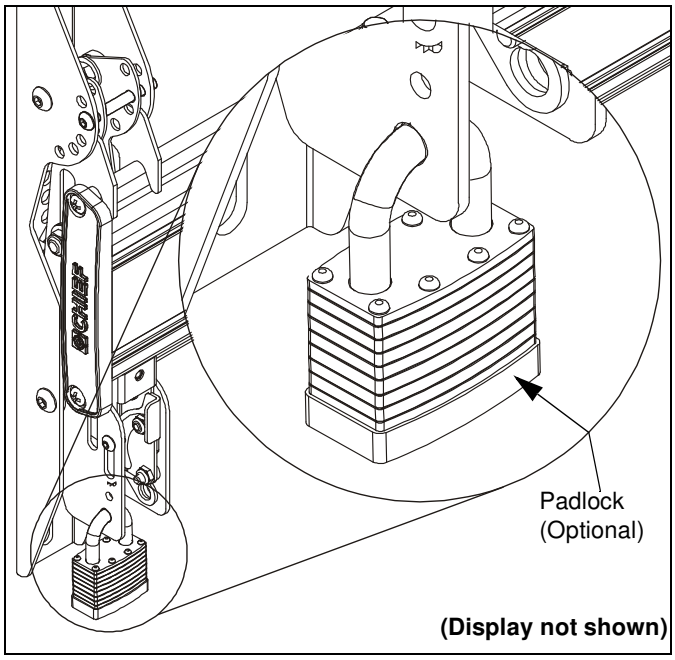

Figure 15

2. Install back cover (GG) into four holes on back of both array heads (FF). (See Figure 16)

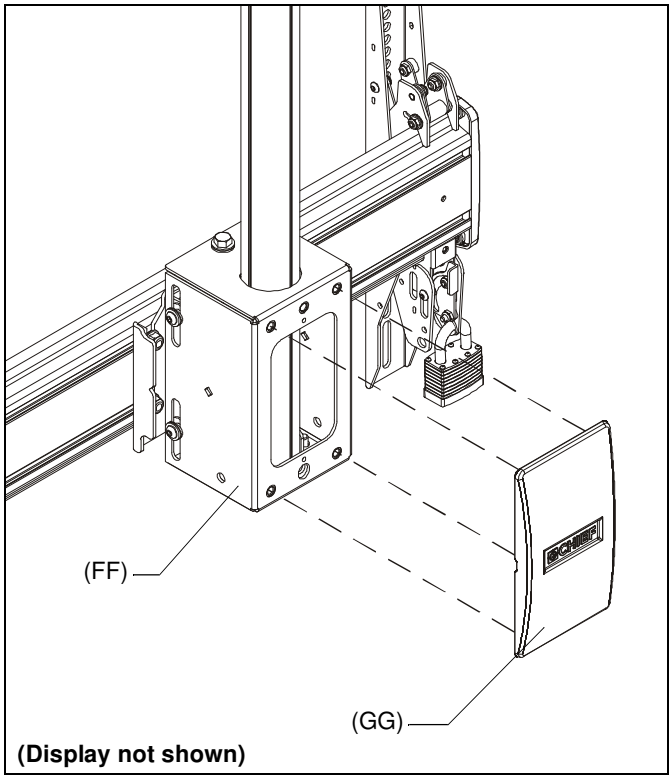

Figure 16

Our Mounts. **Your Vision.**

Chief, a products division of
Milestone AV Technologies

8800-003045 Rev00
©2018 Milestone AV Technologies
www.milestone.com
04/18

USA/International
A 6436 City West Parkway, Eden Prairie, MN 55344
P 800.582.6480 / 952.225.6000
F 877.894.6918 / 952.894.6918

Europe
A Franklinstraat 14, 6003 DK Weert, Netherlands
P +31 (0) 495 580 852
F +31 (0) 495 580 845

Asia Pacific
A Office No. 918 on 9/F, Shatin Galleria
18-24 Shan Mei Street
Fotan, Shatin, Hong Kong
P 852 2145 4099
F 852 2145 4477

30% POST-CONSUMER CONTENT