# AXIS M3098-V Dome Camera

## Compact AI-powered 8 MP mini dome

This AI-powered mini dome offers a wide field of view and great image quality even in challenging light conditions. It comes with AXIS Object Analytics preinstalled to detect, classify, track, and count humans. It also includes an acoustic sensor with AXIS Audio Analytics, which notifies you whenever something relevant happens, even when there's no visual indication. It offers flexible and discreet installation on walls and ceilings. Selected markets feature direct installation view in AXIS Installer app. Furthermore, Axis Edge Vault safeguards the device and offers FIPS 140-3 Level 3 certified secure key storage and operations.

- Great image quality in 8 MP
- Compact, discreet design
- Forensic WDR and Lightfinder
- AI-powered audio and video analytics
- Built-in cybersecurity with Axis Edge Vault

FIPS 140-3 Inside #5139

# AXIS M3098-V Dome Camera

## Camera

**Image sensor**
1/1.8" progressive scan RGB CMOS
Pixel size 2.0 µm

**Lens**
3.76 mm, F2.0
Horizontal field of view: 124°
Vertical field of view: 66°
M12 mount, fixed iris, IR corrected

**Day and night**
Automatic IR-cut filter
Hybrid IR filter

**Minimum illumination**
**Color:** 0.19 lux at 50 IRE, F2.0
**B/W:** 0.05 lux at 50 IRE, F2.0

**Shutter speed**
1/66000 s to 1/5 s

**Camera adjustment**
Pan ±175°, tilt +57° to -10°, rotation ±175°

## System on chip (SoC)

**Model**
CV75

**Memory**
2 GB RAM, 8 GB Flash

**Compute capabilities**
Deep learning processing unit (DLPU)

## Video

**Video compression**
H.264 (MPEG-4 Part 10/AVC) Main and High Profiles
H.265 (MPEG-H Part 2/HEVC) Main Profile
Motion JPEG

**Resolution**
**16:9:** 3840x2160 to 640x360
**4:3:** 1440x1080 to 320x240

**Frame rate**
Up to 12/15 fps (50/60 Hz) with H.264 and H.265[1] in all resolutions in 8 MP mode
Up to 25/30 fps (50/60 Hz) with H.264 and H.265[1] in all resolutions in 4 MP mode

**Video streaming**
Multiple, individually configurable streams in H.264, H.265 and Motion JPEG
Axis Zipstream technology in H.264 and H.265
Controllable frame rate and bandwidth
VBR/ABR/MBR H.264/H.265

**WDR**
Forensic WDR: Up to 120 dB depending on scene

**Multi-view streaming**
2 individually cropped out view areas

**Image settings**
Saturation, contrast, brightness, sharpness, white balance, day/night threshold, local contrast, tone mapping, exposure mode, exposure zones, compression, rotation: 0°, 90°, 180°, 270° including corridor format, mirroring, dynamic text and image overlay, privacy masks
Scene profiles: forensic, vivid

**Image processing**
Axis Zipstream, Forensic WDR, Lightfinder

**Pan/Tilt/Zoom**
Digital PTZ

## Network

**Network protocols**
IPv4, IPv6 USGv6, ICMPv4/ICMPv6, HTTP, HTTPS[2], HTTP/2, TLS[2], QoS Layer 3 DiffServ, FTP, SFTP, CIFS/SMB, SMTP, mDNS (Bonjour), UPnP®, SNMP v1/v2c/v3 (MIB-II), DNS/DNSv6, DDNS, NTP, NTS, PTP, RTSP, RTP, SRTP/RTSPS, TCP, UDP, IGMPv1/v2/v3, RTCP, ICMP, DHCPv4/v6, SSH, LLDP, CDP, MQTT v3.1.1, Secure syslog (RFC 3164/5424, UDP/TCP/TLS), Link-Local address (ZeroConf)

1. *Reduced frame rate in Motion JPEG*
2. *This product includes software developed by the OpenSSL Project for use in the OpenSSL Toolkit. (openssl.org), and cryptographic software written by Eric Young (eay@cryptsoft.com).*

## System integration

### Application Programming Interface
Open API for software integration, including VAPIX®, metadata and AXIS Camera Application Platform (ACAP); specifications at *axis.com/developer-community*.
One-click cloud connection
ONVIF® Profile G, ONVIF® Profile M, ONVIF® Profile S, and ONVIF® Profile T, specifications at *onvif.org*

### Video management systems
Compatible with AXIS Camera Station Edge, AXIS Camera Station Pro, AXIS Camera Station 5, and video management software from Axis' partners available at *axis.com/vms*.

### Onscreen controls
Day/night shift
Wide dynamic range
Privacy masks

### Edge-to-edge
Siren and light pairing

### Event conditions
Application
Audio analytics: audio level above threshold, coughing fit detected, glass break detected, scream detected, shout detected, speech detected, SPL: Above threshold upper, SPL: Below threshold lower
Device status: above/below/within operating temperature, Audit logs, IP address blocked/removed, live stream active, network lost, new IP address, system ready
Edge storage: recording ongoing, storage disruption, storage health issues detected
I/O: manual trigger, virtual input is active
MQTT: MQTT client connected
Scheduled and recurring: schedule
Video: average bitrate degradation, day-night mode, tampering

### Event actions
Day-night mode
LEDs: flash status LED, flash status LED while the rule is active
MQTT: send MQTT publish message
Notification: HTTP, HTTPS, TCP and email
Overlay text
Recordings: record video, record video while the rule is active
Security: erase configuration
SNMP trap messages: send, send while the rule is active
Images or video clips: FTP, SFTP, HTTP, HTTPS, network share and email
WDR mode

### Built-in installation aids
Pixel counter, level grid

## Analytics

### Applications
**Included**
AXIS Object Analytics, AXIS Image Health Analytics, AXIS Audio Analytics, AXIS Scene Metadata, AXIS Live Privacy Shield[3], AXIS Video Motion Detection
**Supported**
Support for AXIS Camera Application Platform enabling installation of third-party applications, see *axis.com/acap*

### AXIS Object Analytics
**Object classes:** humans, vehicles (types: cars, buses, trucks, bikes, other)
**Scenarios:** line crossing, object in area, time in area, crossline counting, occupancy in area, tailgating detection, PPE monitoring[BETA], motion in area, motion line crossing
Up to 10 scenarios
**Other features:** triggered objects visualized with color-coded bounding boxes
Polygon include/exclude areas
Perspective configuration
ONVIF Motion Alarm event

### AXIS Image Health Analytics
**Detection settings:**
Tampering: blocked image, redirected image
Image degradation: blurred image, underexposed image
**Other features:** sensitivity, validation period

3. *Available for download*

### AXIS Audio Analytics
**Features:** sound pressure level, adaptive audio detection, audio classification
**Audio classes:** scream, shout, glass break, speech, coughing fit
**Event metadata:** audio detections, classifications, sound pressure level

### AXIS Scene Metadata
**Object classes:** humans, faces, vehicles (types: cars, buses, trucks, bikes), license plates
**Object attributes:** vehicle color, upper/lower clothing color, bag, confidence, position

## Approvals

### Product markings
CE, FCC, ICES, UL, RCM[4], BSMI[4], KC[4], NCC[4], TELEC[4], VCCI[4]

### Supply chain
TAA compliant

### EMC
CISPR 35, CISPR 32 Class B, EN 55035,
EN 55032 Class B, EN 61000-6-1, EN 61000-6-2
**Australia/New Zealand:** RCM AS/NZS CISPR 32 Class B[4]
**Canada:** ICES(B)/NMB(B)
**Japan:** VCCI Class B[4]
**Korea:** KS C 9835[4], KS C 9832 Class B[4]
**USA:** FCC Part 15 Subpart B Class B

### Safety
CAN/CSA C22.2 No. 62368-1 ed. 3,
IEC/EN/UL 62368-1 ed. 3, EN 62311[4], NOM-001[5]

### Environment
IEC 60068-2-1, IEC 60068-2-2, IEC 60068-2-6,
IEC 60068-2-14, IEC 60068-2-27, IEC 60068-2-78,
IEC/EN 60529 IP42, IEC/EN 62262 IK08

### Wireless
EN 62311[4], EN 300328[4], EN 301489-1[4],
EN 301489-17[4], FCC Part 15 Subpart C[4],
FCC Part 2 Subpart J[4], MIC[4], NCC[4], RSS-102[4], RSS-247[4],
RSS-Gen[4]

### Network
NIST SP500-267

### Cybersecurity
ETSI EN 303 645, BSI IT Security Label, FIPS 140, EN 18031-1[4]

## Cybersecurity

### Edge security
**Software:** Signed OS, brute force delay protection, digest authentication and OAuth 2.0 RFC6749 Client Credential Flow/OpenID Authorization Code Flow for centralized ADFS account management, password protection, Axis Cryptographic Module (FIPS 140-2 level 1)
**Hardware:** Axis Edge Vault cybersecurity platform
Secure keystore: secure element (CC EAL 6+, FIPS 140-3 Level 3), system-on-chip security (TEE)
Axis device ID, signed video, secure boot, encrypted filesystem (AES-XTS-Plain64 256bit)

### Network security
IEEE 802.1X (EAP-TLS, PEAP-MSCHAPv2)[6],
IEEE 802.1AE (MACsec PSK/EAP-TLS), IEEE 802.1AR,
HTTPS/HSTS[6], TLS v1.2/v1.3[6], Network Time Security (NTS), X.509 Certificate PKI, host-based firewall

### Documentation
*AXIS OS Hardening Guide*
*Axis Vulnerability Management Policy*
*Axis Security Development Model*
AXIS OS Software Bill of Material (SBOM)
To download documents, go to *axis.com/support/cybersecurity/resources*
To read more about Axis cybersecurity support, go to *axis.com/cybersecurity*

## General

### Casing
IP42- and IK08-rated
Polycarbonate hard-coated dome
Color: white NCS S 1002-B
For repainting instructions, go to the product's support page. For information about the impact on warranty, go to *axis.com/warranty-implication-when-repainting*.

### Power
Power over Ethernet (PoE) IEEE 802.3af/802.3at Type 1 Class 2, max 3.9 W, typical (heater off) 3.4 W
Features: dynamic power mode, power meter

4. *Not valid for ROW variants*
5. *Only valid for ROW variants*
6. *This product includes software developed by the OpenSSL Project for use in the OpenSSL Toolkit. (openssl.org), and cryptographic software written by Eric Young (eay@cryptsoft.com).*

### Wireless interface
Bluetooth® 5.4 Low Energy[7] [8]
Bluetooth profiles: none[8]
Features: direct installation view through AXIS Installer mobile app[8]

### Environmental sensors
Environmental sensors through portcast technology accessories. For more information, see *Optional accessories*.

### Connectors
Network: RJ45 10BASE-T/100BASE-TX/1000BASE-T PoE

### Sensor
Acoustic sensor

### Storage
Support for microSD/microSDHC/microSDXC card
Support for SD card encryption (AES-XTS-Plain64 256bit)
Recording to network-attached storage (NAS)
For SD card and NAS recommendations see *axis.com*

### Operating conditions
Temperature: 0 °C to 45 °C (32 °F to 113 °F)
Humidity: 10–85% RH (non-condensing)

### Storage conditions
Temperature: -40 °C to 65 °C (-40 °F to 149 °F)
Humidity: 5–95% RH (non-condensing)

### Dimensions
For the overall product dimensions, see the dimension drawing in this datasheet.

### Weight
194 g (0.43 lb)

### Box content
Camera, installation guide, owner authentication key

### System tools
AXIS Site Designer, AXIS Device Manager, AXIS Installer, product selector, accessory selector, lens calculator
Available at *axis.com*

### Languages
English, German, French, Spanish, Italian, Russian, Simplified Chinese, Japanese, Korean, Portuguese, Polish, Traditional Chinese, Dutch, Czech, Swedish, Finnish, Turkish, Thai, Vietnamese

### Warranty
5-year warranty, see *axis.com/warranty*

### Software support
New feature development until 2030 (AXIS OS 12, 13 and 14)
Support until 2035-12-31 (AXIS OS LTS 2030–2035)
Read more about the AXIS OS lifecycle at *help.axis.com/axis-os*

### Part numbers
Available at *axis.com/products/axis-m3098-v#part-numbers*

## Optional accessories

### Portcast
AXIS D6210 Air Quality Sensor[9]

### Installation
AXIS T8415 Wireless Installation Tool

### Mounting
AXIS TM3401 Grid Ceiling Mount, AXIS TM3101 Pendant Wall Mount, AXIS T91 Mounting Accessories, AXIS T94 Mounting Accessories

### Storage
AXIS Surveillance Cards

Smoked dome
For more accessories, go to *axis.com/products/axis-m3098-v#compatible-products*

## Sustainability

### Substance control
PVC free, BFR/CFR free in accordance with JEDEC/ECA Standard JS709
RoHS in accordance with EU RoHS Directive 2011/65/EU and 2015/863, and standard EN IEC 63000:2018
REACH in accordance with (EC) No 1907/2006. For SCIP UUID, see *echa.europa.eu*

7. *The Bluetooth® word mark and logos are registered trademarks owned by Bluetooth SIG, Inc. and any use of such marks by Axis Communications AB is under license. Other trademarks and trade names are those of their respective owners.*
8. *Not valid for ROW variants*
9. *Power requirement with accessory connected: PoE IEEE 802.3af Class 3, supplied by a compliant power sourcing equipment.*

## Materials

Renewable carbon-based plastic content: 65% (recycled: 27%, bio-based: 35%, carbon capture based: 3%)
Screened for conflict minerals in accordance with OECD guidelines
To read more about sustainability at Axis, go to *axis.com/about-axis/sustainability*

---

## Environmental responsibility

*axis.com/environmental-responsibility*
Axis Communications is a signatory of the UN Global Compact, read more at *unglobalcompact.org*

## Detect, Observe, Recognize, Identify (DORI)

| | DORI definition | Distance |
|---|---|---|
| Detect | 25 px/m (8 px/ft) | 75 m (250 ft) |
| Observe | 63 px/m (19 px/ft) | 30 m (98 ft) |
| Recognize | 125 px/m (38 px/ft) | 15 m (49 ft) |
| Identify | 250 px/m (76 px/ft) | 8 m (30 ft) |

The DORI values are calculated using pixel densities for different use cases as recommended by the EN-62676-4 standard. The calculations use the center of the image as the reference point and consider lens distortion. The possibility to recognize or identify a person or object depends on factors such as object motion, video compression, lighting conditions, and camera focus. Use margins when planning. The pixel density varies across the image, and the calculated values can differ from the distances in the real world.

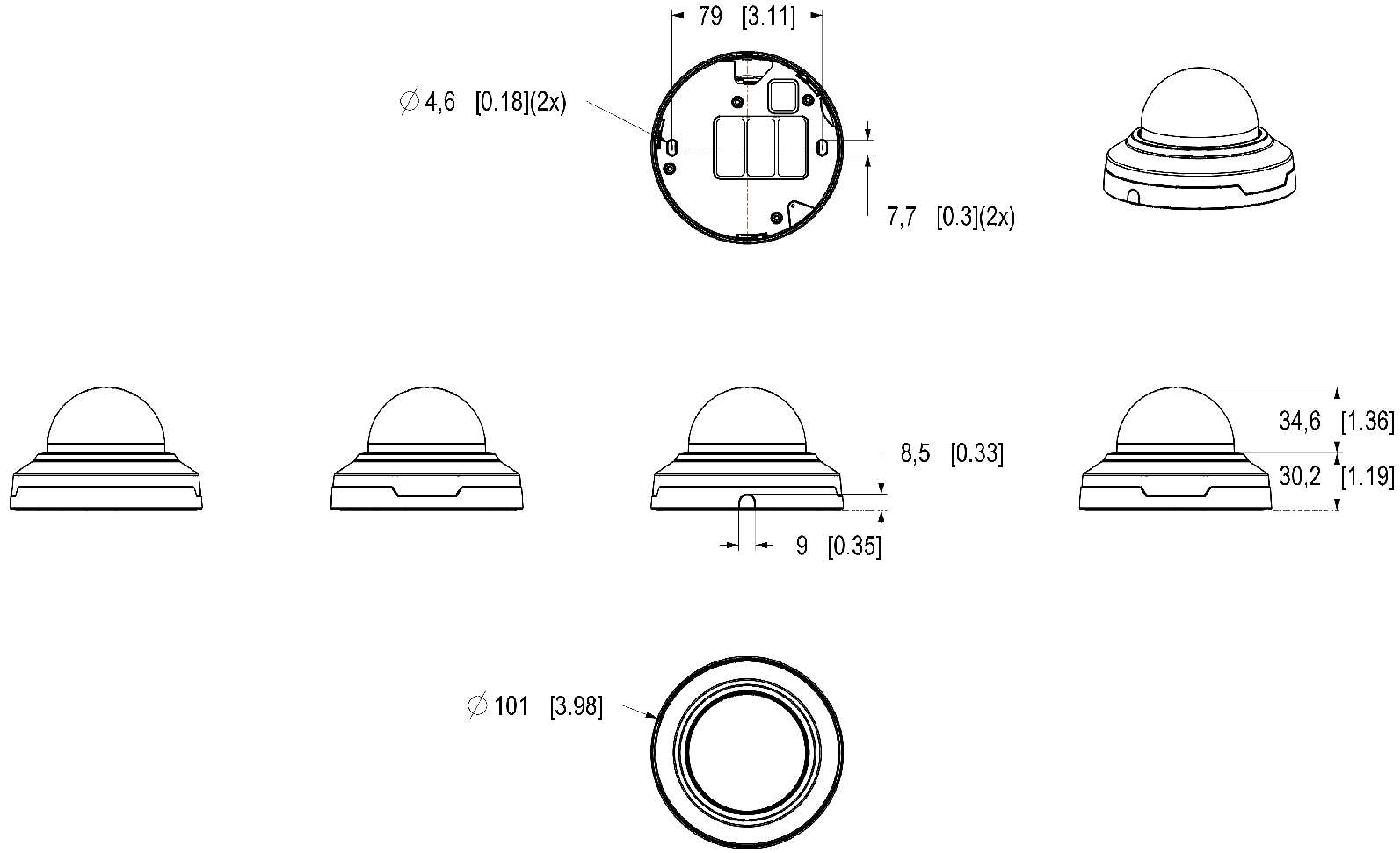


AXIS COMMUNICATIONS

# AXIS M3098-V Dome Camera

Dimensions in mm [inch]

| Date | Version | Scale |
|---|---|---|
| 2026-Jan-21 | M1.5 | 1:2 |
| Drawing Number | Size | Sheet |
| 3507214 | A3 | 1(1) |

© 2026 Axis Communications AB. All rights reserved.

## Highlighted capabilities

### AXIS Audio Analytics

AXIS Audio Analytics uses adaptive audio detection to generate alarms on sudden increases in sound volume. With AI-based classifiers, it can detect screaming and shouting. You can also get extra confirmation by combining AXIS Audio Analytics with video analytics. This smart application only transmits metadata, ensuring privacy is safeguarded. A core feature of AXIS OS, AXIS Audio Analytics comes preinstalled at no extra cost.

### AXIS Object Analytics

AXIS Object Analytics is a preinstalled, multifeatured video analytics that detects and classifies humans, vehicles, and types of vehicles. Thanks to AI-based algorithms and behavioral conditions, it analyzes the scene and their spatial behavior within – all tailored to your specific needs. Scalable and edge-based, it requires minimum effort to set up and supports various scenarios running simultaneously.

### Axis Edge Vault

Axis Edge Vault is the hardware-based cybersecurity platform that safeguards the Axis device. It forms the foundation that all secure operations depend on and offer features to protect the device's identity, safeguard its integrity and protect sensitive information from unauthorized access. For instance, **secure boot** ensures that a device can boot only with **signed OS**, which prevents physical supply chain tampering. With signed OS, the device is also able to validate new device software before accepting to install it. And the **secure keystore** is the critical building-block for protecting cryptographic information used for secure communication (IEEE 802.1X, HTTPS, Axis device ID, access control keys etc.) against malicious extraction in the event of a security breach. The secure keystore and secure connections are provided through a Common Criteria or FIPS 140 certified hardware-based cryptographic computing module.

Furthermore, signed video ensures that video evidence can be verified as untampered. Each camera uses its unique video signing key, which is securely stored in the secure keystore, to add a signature into the video stream allowing video to be traced back to the Axis camera from where it originated.

To read more about Axis Edge Vault, go to *axis. com/ solutions/edge-vault*.

### Direct installation view

Direct installation view is a camera feature that enables fast setup using Bluetooth® technology to view the camera stream in real time during the installation phase.

### Forensic WDR

Axis cameras with wide dynamic range (WDR) technology make the difference between seeing important forensic details clearly and seeing nothing but a blur in challenging light conditions. The difference between the darkest and the brightest spots can spell trouble for image usability and clarity. Forensic WDR effectively reduces visible noise and artifacts to deliver video tuned for maximal forensic usability.

### Lightfinder

The Axis Lightfinder technology delivers high-resolution, full-color video with a minimum of motion blur even in near darkness. Because it strips away noise, Lightfinder makes dark areas in a scene visible and captures details in very low light. Cameras with Lightfinder discern color in low light better than the human eye. In surveillance, color may be the critical factor to identify a person, an object, or a vehicle.

For more information, see *axis.com/glossary*

© 2025 – 2026 Axis Communications AB. AXIS COMMUNICATIONS, AXIS, ARTPEC and VAPIX are registered trademarks of Axis AB in various jurisdictions. All other trademarks are the property of their respective owners. We reserve the right to introduce modifications without notice.