THUMP v4

PROFESSIONAL POWERED SUBWOOFER SERIES

OWNER'S MANUAL

MACKIE.

Important Safety Instructions

1. Read these instructions.
2. Keep these instructions.
3. Heed all warnings.
4. Follow all instructions.
5. Do not use this apparatus near water.
6. Clean only with a dry cloth.
7. Do not block any ventilation openings. Install in accordance with the manufacturer's instructions.
8. Minimum distance (5 cm) around the apparatus for sufficient ventilation. The ventilation should not be impeded by covering the ventilation openings with items, such as newspapers, table-cloths, curtains, etc.
9. Do not install near any heat sources such as radiators, heat registers, stoves, or other apparatus (including amplifiers) that produce heat.
10. No naked flame sources, such as lighted candles, should be placed on the apparatus.
11. Do not defeat the safety purpose of the polarized or grounding-type plug. A polarized plug has two blades with one wider than the other. A grounding-type plug has two blades and a third grounding prong. The wide blade or the third prong are provided for your safety. If the provided plug does not fit into your outlet, consult an electrician for replacement of the obsolete outlet.

12. Protect the power cord from being walked on or pinched particularly at plugs, convenience receptacles, and the point where they exit from the apparatus.
13. Only use attachments/accessories specified by the manufacturer.
14. Use only with a cart, stand, tripod, bracket, or table specified by the manufacturer, or sold with the apparatus. When a cart is used, use caution when moving the cart/apparatus combination to avoid injury from tip-over.
15. Unplug this apparatus during lightning storms or when unused for long periods of time.
16. Refer all servicing to qualified service personnel. Servicing is required when the apparatus has been damaged in any way, such as power-supply cord or plug is damaged, liquid has been spilled or objects have fallen into the apparatus, the apparatus has been exposed to rain or moisture, does not operate normally, or has been dropped.
17. This apparatus shall not be exposed to dripping or splashing, and no object filled with liquids, such as vases or beer glasses, shall be placed on the apparatus.
18. Do not overload wall outlets and extension cords as this can result in a risk of fire or electric shock.

CAUTION

RISK OF ELECTRIC SHOCK! DO NOT OPEN!

CAUTION: TO REDUCE THE RISK OF ELECTRIC SHOCK DO NOT REMOVE COVER (OR BACK). NO USER-SERVICEABLE PARTS INSIDE. REFER SERVICING TO QUALIFIED PERSONNEL.

The lightning flash with arrowhead symbol within an equilateral triangle is intended to alert the user to the prescence of uninsulated "dangerous voltage" within the product's enclosure, that may be of significant magnitude to constitute a risk of electric shock to persons.

The exclamation point within an equilateral triangle is intended to alert the user of the prescence of important operating and maintaining (servicing) instructions in the literature accompanying the appliance.

19. This apparatus has been designed with Class-I construction and must be connected to a mains socket outlet with a protective earthing connection (the third grounding prong).
20. This apparatus has been equipped with a rocker-style AC mains power switch. This switch is located on the rear panel and should remain readily accessible to the user.
21. This apparatus has been designed with Class-I construction and must be connected to a mains socket outlet with a protective earthing connection (the third grounding prong).
22. The use of apparatus is in tropical and/or moderate climates.
23. The maximum ambient temperature during use of the appliance must not exceed 0–45° C // 32–113° F.
24. **NOTE:** This equipment has been tested and found to comply with the limits for a Class A digital device, pursuant to part 15 of the FCC Rules. These limits are designed to provide reasonable protection against harmful interference when the equipment is operated in a commercial environment. This equipment generates, uses, and can radiate radio frequency energy and, if not installed and used in accordance with the instruction manual, may cause harmful interference to radio communications. Operation of this equipment in a residential area is likely to cause harmful interference in which case the user will be required to correct the interference at his own expense.

    WARNING: Operation of Thump15Sv4/ Thump18Sv4 in a residential environment could cause radio interference.

    CAUTION: Changes or modifications to this device not expressly approved by LOUD Audio, LLC could void the user's authority to operate the equipment under FCC rules.
25. This apparatus does not exceed the Class A/Class B (whichever is applicable) limits for radio noise emissions from digital apparatus as set out in the radio interference regulations of the Canadian Department of Communications.

    Canada ICES-003(A)/NMB-003(A)

    ATTENTION — *Le présent appareil numérique n'émet pas de bruits radioélectriques dépassant las limites applicables aux appareils numériques de class A/de class B (selon le cas) prescrites dans le réglement sur le brouillage radioélectrique édicté par les ministere des communications du Canada.*
26. Exposure to extremely high noise levels may cause permanent hearing loss. Individuals vary considerably in susceptibility to noise-induced hearing loss, but nearly everyone will lose some hearing if exposed to sufficiently intense noise for a period of time. The U.S. Government's Occupational Safety and Health Administration (OSHA) has specified the permissible noise level exposures shown in the following chart.

    According to OSHA, any exposure in excess of these permissible limits could result in some hearing loss. To ensure against potentially dangerous exposure to high sound pressure levels, it is recommended that all persons exposed to equipment capable of producing high sound pressure levels use hearing protectors while the equipment is in operation. Ear plugs or protectors in the ear canals or over the ears must be worn when operating the equipment in order to prevent permanent hearing loss if exposure is in excess of the limits set forth here:

Duration, per day in hours	Sound Level dBA, Slow Response	Typical Example
8	90	Duo in small club
6	92	
4	95	Subway Train
3	97	
2	100	Very loud classical music
1.5	102	
1	105	The dogs barking at the mailman
0.5	110	
0.25 or less	115	Loudest parts at a rock concert

WARNING — To reduce the risk of fire or electric shock, do not expose this apparatus to rain or moisture.

CAUTION — To prevent electric shock hazard, do not connect to mains power supply while grille is removed.

If the product is subjected to static electrical interference, it is necessary to manually restart the product which is within the design scope of the product.

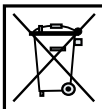

Correct disposal of this product: This symbol indicates that this product should not be disposed of with your household waste, according to the WEEE directive (2012/19/EU) and your national law. This product should be handed over to an authorized collection site for recycling waste electrical and electronic equipment (EEE). Improper handling of this type of waste could have a possible negative impact on the environment and human health due to potentially hazardous substances that are generally associated with EEE. At the same time, your cooperation in the correct disposal of this product will contribute to the effective usage of natural resources. For more information about where you can drop off your waste equipment for recycling, please contact your local city office, waste authority, or your household waste disposal service.

Table of Contents

Important Safety Instructions....2

Table of Contents....3

Chapter 1 : Welcome....5

Introduction....5
Features....5
Things to Remember....5
About This Guide....6
Getting Started....6

Chapter 2 : THUMPV4 Subwoofer Series Rear Panel Features....7

Power Connector....7
Power Switch....7
XLR Input Jacks....8
XLR Output Jacks [High Pass and Full Range]....9
High Pass Mode....9
Main Gain Knob and SIG/OL LED....10
Front LED Switch....10
FR Output Switch....10
Phase Switch....10

Chapter 3 : Placement and Polarity....11

Placement....11
The Ins and Outs of Polarity....11
Polarity Waveforms....11

Chapter 4 : Protection Circuitry 12

Introduction 12
- **Overexcursion Protection** 12
- **Thermal Protection** 12
- **AC Power** 12
- **Care and Maintenance** 12

Hookup Diagrams 13

Hookup Diagrams > Small Club System 13
Hookup Diagrams > Large Club System 14
Hookup Diagrams > DJ System 15
Hookup Diagrams > Daisy-Chaining Multiple THUMPV4 Series Subwoofers 16

Appendix A : Service Information 17

Introduction 17
Troubleshooting 17
Repair 18

Appendix B : Technical Information 19

THUMP15SV4 and THUMP18SV4 Specifications 19
THUMP15SV4 and THUMP18SV4 Dimensions 22
THUMP15SV4 and THUMP18SV4 Block Diagram 23

Warranty Statement 24

That's All, Folks! 25

Chapter 1 : Welcome

Introduction

Hello everyone! This is the THUMP15SV4 and THUMP18SV4 Owner's Manual. This document contains detailed information about the THUMPV4 subwoofer series ... we hope you like it!

Craving some extra oomph for your PA system? You need a subwoofer.

THUMP15SV4 and THUMP18SV4 shake the floorboards with massive bass that gets people on their feet.

Connect loudspeakers. Dial in the perfect low end. Feel the difference of a professional subwoofer that brings music alive with complex basslines and punchy kicks.

THUMPV4 subwoofers integrate perfectly with THUMPV4 loudspeakers, with voicing modes that automatically tailor the sound to match the size of your speakers. You can also set the crossover manually for more control over your sound.

Built-in carry handles make THUMPV4 subwoofers portable enough to add to your touring rig or gigging setup.

If you have any questions or comments about this Owner's Manual (or other Mackie documentation), please don't hesitate to contact us:

- www.mackie.com/support-contact

Features

- 1400W ultra-efficient Class-D amplifier
- 15″ high-performance woofer [THUMP15SV4]
- 18″ high-performance woofer [THUMP18SV4]
- Crossover modes tailor the bass to your speakers
- Fully mutable level control
- Stereo XLR inputs for your audio source
- Stereo high-pass XLR outputs for loudspeakers
- Stereo full-range XLR outputs with mono button for chaining more subs
- Polarity invert switch
- Built-in ergonomic carry handles
- M20 mounting thread for SPM400 speaker pole (sold separately)

Things to Remember

- Never listen to loud music for prolonged periods.
  Please see the Safety Instructions on page 2 for information on hearing protection.
- Save the shipping boxes and packing materials! You may need them someday. Besides, the cats will love playing in them and jumping out at you unexpectedly. Remember to pretend like you are surprised!
- Save your sales receipt in a safe place.

About This Guide

This guide is designed to be accessible, with subsections as complete as practical to minimize having to electronically leaf back and forth looking for the whole story. The entire manual does not need to be read to figure out how to use THUMPV4 Series subwoofers.

As the saying goes, "a picture tells a 1000 words". With that thought in mind, we added quite a few illustrations, screenshots, and other images throughout to accompany the text.

This icon marks information that is critically important or unique! For your own good, read and remember them.

There's an illustration of a microscope, so, of course, you're going to get more detailed information when you see this little guy. There are explanations of features and practical tips listed here.

It's a good idea to pay attention to text displayed next to a note icon, as this icon draws attention to certain features and functions relating to the usage of the THUMPV4 Series subwoofers.

Getting Started

The following steps will help you set up the THUMPV4 Series subwoofers quickly. If you desire a more thorough walk-through of the THUMPV4 Series subwoofers, there is a wealth of information in the following pages!

1. Read and understand the Important Safety Instructions on page 2.
2. Make all initial connections with the power switches OFF on all equipment.
   Make sure the master volume, level, and gain controls are turned all the way down.
3. Connect the outputs from the mixing console (or other signal source) to the inputs on the rear panel of the subwoofer, then connect the high pass outputs from the subwoofer to the inputs of the loudspeakers.
4. Make sure the subwoofer's level knob is set to "U" (unity gain).
5. Push the line cord securely into the subwoofer's/loudspeaker's IEC connectors and plug the other ends into grounded AC outlets. The subwoofer/loudspeaker may accept the appropriate voltage as indicated near the IEC connector.
6. Turn the mixer (or other signal source) on.
7. Turn the subwoofer(s) on.
8. Turn the loudspeaker(s) on.
9. Be sure that the volume of the input is the same as it would be during normal use.
10. Start the signal source and raise the mixer's main L/R fader up to a comfortably loud listening level.

Chapter 2 : THUMPV4 Subwoofer Series Rear Panel Features

Power Connector

This is a standard 3-prong IEC power connector. Connect the detachable power cord (included in the packaging with the subwoofer) to the power receptacle, and plug the other end of the power cord into an AC outlet.

Make sure that the voltage of the connected electrical supply is matched to the AC voltage indicated on the rear panel (near the IEC input).

Warning: Disconnecting the plug's ground pin is dangerous. Don't do it!

Power Switch

Press the top side of this rocker switch inwards to turn on the subwoofer. Press the bottom side of this rocker switch inwards to turn off the subwoofer.

In order to reduce the possibility of any turn-on or turn-off thumps and other noises generated by any equipment from coming out of the speakers, the devices should be turned on in order from the initial input to the final output. Typically, the mixer (or other signal source) would be turned on first, subwoofers next, and loudspeakers last. As such, the loudspeakers would also be turned off first, followed by the subwoofers, then the mixer (or other signal source). System routing may vary, but the principle remains the same.

XLR Input Jacks

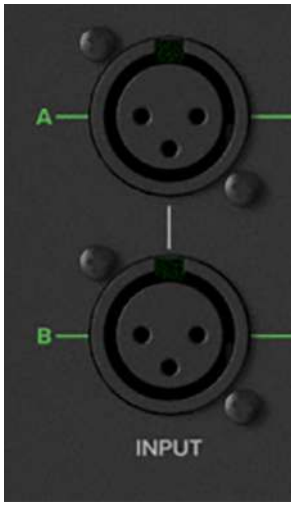

Inputs A and B may accept a balanced mic signal using an XLR connector.

They are wired as follows, according to standards specified by the AES (Audio Engineering Society).

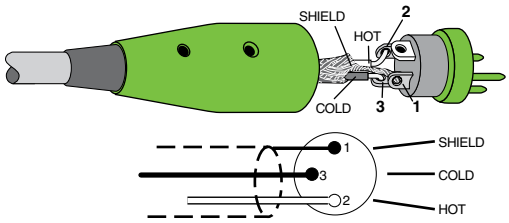

XLR Balanced Wiring:

Pin 1 = Shield (ground)
Pin 2 = Positive (+ or hot)
Pin 3 = Negative (– or cold)

NEVER connect the output of an amplifier directly to a THUMPV4 subwoofer's input jack. This could damage the input circuitry and we wouldn't want that now, would we?

XLR Output Jacks [High Pass and Full Range]

This is a male XLR-type connector that produces the mix from the input jacks.

High Pass Outputs:

Typically, full-range loudspeakers are connected to the high pass outputs to "split" the work with the subwoofer. The subwoofer handles all of the low frequencies and the loudspeakers handle the rest. As a result, it is more efficient and a bit louder.

Balanced XLR male connectors are provided for the line-level Ch. A and B high pass outputs. The subwoofer's crossover splits the input signals into two frequency bands. The low frequency range goes to the internal amplifier that powers the subwoofer. The high frequency range is sent to these line-level output jacks.

The main volume and phase settings have no effect on the high pass outputs. The outputs are separate and maintain the stereo separation of the input signals.

Full Range Outputs:

Typically, another powered subwoofer, powered loudspeakers, or an amplifier powering passive loudspeakers would need full range signal from the output of the first subwoofer in the signal chain. Balanced XLR male connectors are provided for the line-level Ch. A and B full range outputs.

The signal at these outputs is a direct copy of the input signals. These outputs allow you to daisy-chain multiple subwoofers and/or send the full range signals to other loudspeakers. It's a great way to add side fills, too!

The output jacks are wired as follows, according to standards specified by the AES (Audio Engineering Society):

Balanced XLR Output Connector:

Pin 1 – Shield (ground)
Pin 2 – Positive (+ or hot)
Pin 3 – Negative (– or cold)

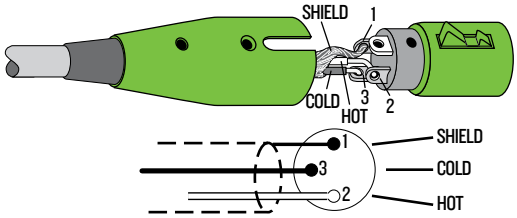

See page 16 to learn more about daisy-chaining THUMPV4 Series subwoofers.

High Pass Mode

The high pass mode allows you to optimize the behavior of the THUMPV4 subwoofer and loudspeakers connected to its high pass outputs. If not using THUMP12V4, THUMP15V4, or THUMP GO loudspeakers, a variable mode allows you to select the best high pass mode suited for your PA system from 80 Hz to 160 Hz. These modes are sequentially accessible, cycled by pressing the High Pass Mode button.

Proprietary DSP is employed to transform the subwoofer and attached top boxes into an acoustically optimized 3-way system. These modes shape the output of the subwoofer while simultaneously controlling the gain and high pass of the signal sent to the top boxes. There are four separate options, depending on intended use case:

- **THUMP 12 [Default]** – 140 Hz plus 1.4ms alignment delay to account for latency in the loudspeaker.
This setting is best suited for a THUMP12V4 loudspeaker connected to either THUMPV4 Series subwoofer.
- **THUMP 15** – 110 Hz plus 1.4ms alignment delay to account for latency in the loudspeaker.
This setting is best suited for a THUMP15V4 loudspeaker connected to a THUMP18SV4 subwoofer.
- **THUMP GO** – 150 Hz plus 1.4ms alignment delay to account for latency in the loudspeaker.
This setting is best suited for a THUMP GO loudspeaker connected to either THUMPV4 Series subwoofer.
- **VAR** – 80 Hz – 160 Hz plus 1.4ms alignment delay to account for latency in the loudspeaker.

NOTE

The High Pass Mode knob is active while in "Variable" mode, but is fully bypassed when any other High Pass Mode is engaged.

Main Gain Knob and SIG/OL LED

The volume knob adjusts the overall signal level at the input to the built-in power amplifiers. It ranges from Off (–∞) to a maximum gain of MAX.

The accompanying dual-colored LED will illuminate green when the input signal is present, indicating signal.

THUMPV4 Series subwoofers have a built-in limiter that helps to prevent the amplifier outputs from clipping or overdriving the transducers. The overload LED illuminates red when the limiter is activated. It's okay for it to blink occasionally, but if it blinks frequently or lights continuously, turn down the volume of the input source until it only blinks occasionally.

Excessive limiting may lead to overheating, which in turn trips the thermal protect circuitry and interrupts the performance. See 'Thermal Protection' on page 12 for more information.

Front LED Switch

There is a horizontal LED located near the bottom-front of each THUMPV4. This LED illuminates green in all its glory when the front LED switch is engaged. Disengage the switch if you do not want the front panel LED to illuminate. We like to call this 'stealth' mode.

FR Output Switch

The FR Output Switch allows you to choose whether the A and B inputs are sent out separately [switch out] or as a mono sum of both inputs [switch in].

This is useful and saves the hassle of additional cable runs when connecting multiple (mono) subwoofers. Instead of running two cables from the first subwoofer to the next one, simply engage the switch and the signals from both inputs are combined.

When this switch is engaged [mono], the line output of the subwoofer is increased by +6 dB since the two input channels are summed together. If THUMPV4 Series subwoofers are daisy-chained and the switch is engaged [mono], the signal can be boosted too much, leading to distortion. We don't want that! The best way to alleviate this is by turning down the tops when in mono mode. Note that this only occurs when both inputs are utilized.

Phase Switch

This switch reverses the polarity of the signal going into the subwoofer amplifier by 180°. It has no effect on the signal at the outputs.

There is no right or wrong setting for this switch. Listen to the overall blend of the subwoofer with the rest of the system and select the switch position that delivers the best sound. In fact, your system may vary when positioned differently and in alternate venues. Don't be afraid to experiment with the position of the polarity switch. See the next page for more information.

Chapter 3 : Placement and Polarity

Placement

THUMPV4 Series subwoofers are designed to sit on the floor or stage as the main PA.
They are not designed to be pole-mounted or suspended.

A socket is provided on top for mounting loudspeakers. The SPM400 is a great pole-mount option.
See the hookup diagrams on pages 14-15.

VERY IMPORTANT!

THUMPV4 Series subwoofers have no rigging points and are not suitable for rigging.
NEVER attempt to suspend a THUMPV4 Series subwoofer by its handles.

Check to make sure that the support surface (e.g. floor, etc.) has the necessary mechanical characteristics to support the weight of the subwoofer(s).

When pole-mounting loudspeakers, be sure that they are stabilized and secured from falling over or being accidentally pushed over. For stacked scenarios, it is highly suggested that straps are utilized. Failure to follow these precautions may result in damage to the equipment, personal injury, or death.

As with any powered components, protect them from moisture. Avoid installing a THUMPV4 Series subwoofer in places exposed to harsh weather conditions. If you are setting them up outdoors, make sure they are under cover if you expect rain.

The Ins and Outs of Polarity

THUMPV4 Series subwoofers include a switch that allows you to quickly invert the polarity of the subwoofer's output relative to the input signal it is receiving from the mixer or other sound source. But what exactly does that mean? A subwoofer works by literally pumping air as the woofer cone moves in and out with respect to the cabinet in which it is housed. It does so according to the low-frequency portion of the signal it receives from the sound source.

The woofer cone is simply following the waveform as seen in the sine wave in Figure 1. As the sine wave rises, the woofer cone pushes out. Likewise, as the sine wave falls, the woofer cone pulls into the cabinet. A musical signal is much more complex, of course, but the same principle applies. Movement of the woofer cone causes air pressure changes that we perceive as sound.

When the normal/invert [phase] switch is engaged, the original waveform is simply reversed 180° [see Figure 2]. Again, the subwoofer cone follows the waveform. However, this time the woofer cone starts by pulling into the cabinet followed by the woofer cone pushing out. If you have ever experimented with a subwoofer polarity switch, you may not have noticed any changes to the sound regardless of its position, especially if you are listening to just the subwoofer. This is normal, as our ears perceive them both at the same time.

The normal/invert [phase] switch comes into play when the subwoofer is paired with a loudspeaker. Ideally, the woofer cones of the subwoofer and full range loudspeaker would work together by pushing and pulling in unison. THUMPV4 Series subwoofers are designed to be used in a broad range of applications. The flexibility provided by the polarity switch is necessary to ensure that you are receiving the best possible sound from your system, regardless of your setup.

Polarity Waveforms

Figure 1: Normal [0°]

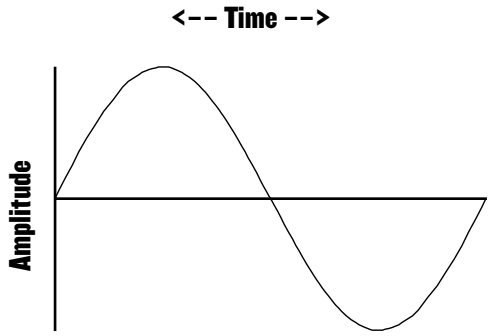

Figure 2: Invert [180°]

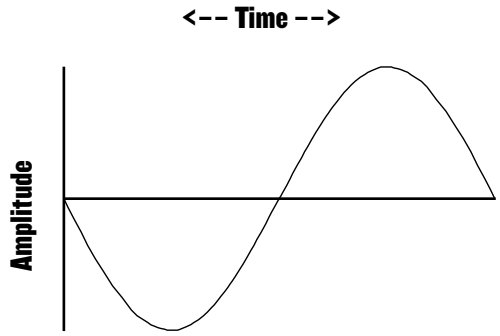

Chapter 4 : Protection Circuitry

Introduction

THUMPV4 Series subwoofers employ a built-in limiter for less distortion at peak levels. A dynamic bass response circuit provides optimal low frequency response regardless of overall output level. Additional protection includes automatic thermal shutdown should the amp overheat. However, with Class-D amp technology, which is highly-efficient, this should never be a problem.

VERY IMPORTANT

The protection circuits are designed to protect the subwoofers under reasonable and sensible conditions. Should you choose to ignore the warning signs [e.g. excessive distortion], you can still damage the woofer in the subwoofer by overdriving it past the point of amplifier clipping. Such damage is beyond the scope of the warranty.

Overexcursion Protection

A subsonic filter circuit just prior to the power amplifier prevents ultra-low frequencies from being amplified. Excessive low-frequency energy can damage the woofer by causing it to "bottom out," also known as overexcursion, which is equivalent to a mechanical form of clipping.

Thermal Protection

All amplifiers produce heat. THUMPV4 Series subwoofers are designed to be efficient both electrically and thermally. In the unlikely event of the amplifier overheating, a built-in thermal switch will activate, muting the signal.

When the amplifier has cooled down to a safe operating temperature, the thermal switch resets itself, and the THUMPV4 Series subwoofer resumes normal operation.

If the thermal switch activates, try turning down the level control a notch or two on the mixing console to avoid overheating the amplifier. Be aware that direct sunlight and/or hot stage lights may be the culprit of an amplifier overheating.

AC Power

Be sure the THUMPV4 Series subwoofer is plugged into an outlet that is able to supply the correct voltage. It will continue to operate at lower voltages, but will not reach full power. Be sure the electrical service can supply enough amperage for all the components connected to it.

We recommend that a stiff (robust) supply of AC power be used because the amplifiers place high current demands on the AC line. The more power that is available on the line, the louder the subwoofer will play and the more peak output power will be available for a cleaner, punchier bass. A suspected problem of "poor bass performance" is often caused by a weak AC supply to the amplifiers.

VERY IMPORTANT

Never remove the ground pin on the power cord or any other component of the THUMPV4 Series subwoofer. This is very dangerous.

Care and Maintenance

Your THUMPV4 Series subwoofer will provide many years of reliable service if you follow these guidelines:

- Avoid exposing it to moisture. If it is set up outdoors, be sure it is under cover if rain is expected.
- Avoid exposure to extreme cold (below freezing temperatures). If you must operate in a cold environment, warm up the voice coils slowly by sending a low-level signal through them for about 15 minutes prior to high-power operation.
- Use a dry cloth to clean the cabinet. Only do this when the power is turned off. Avoid getting moisture into any of the openings of the cabinet, particularly where the drivers are located.

Hookup Diagrams

Hookup Diagrams > Small Club System

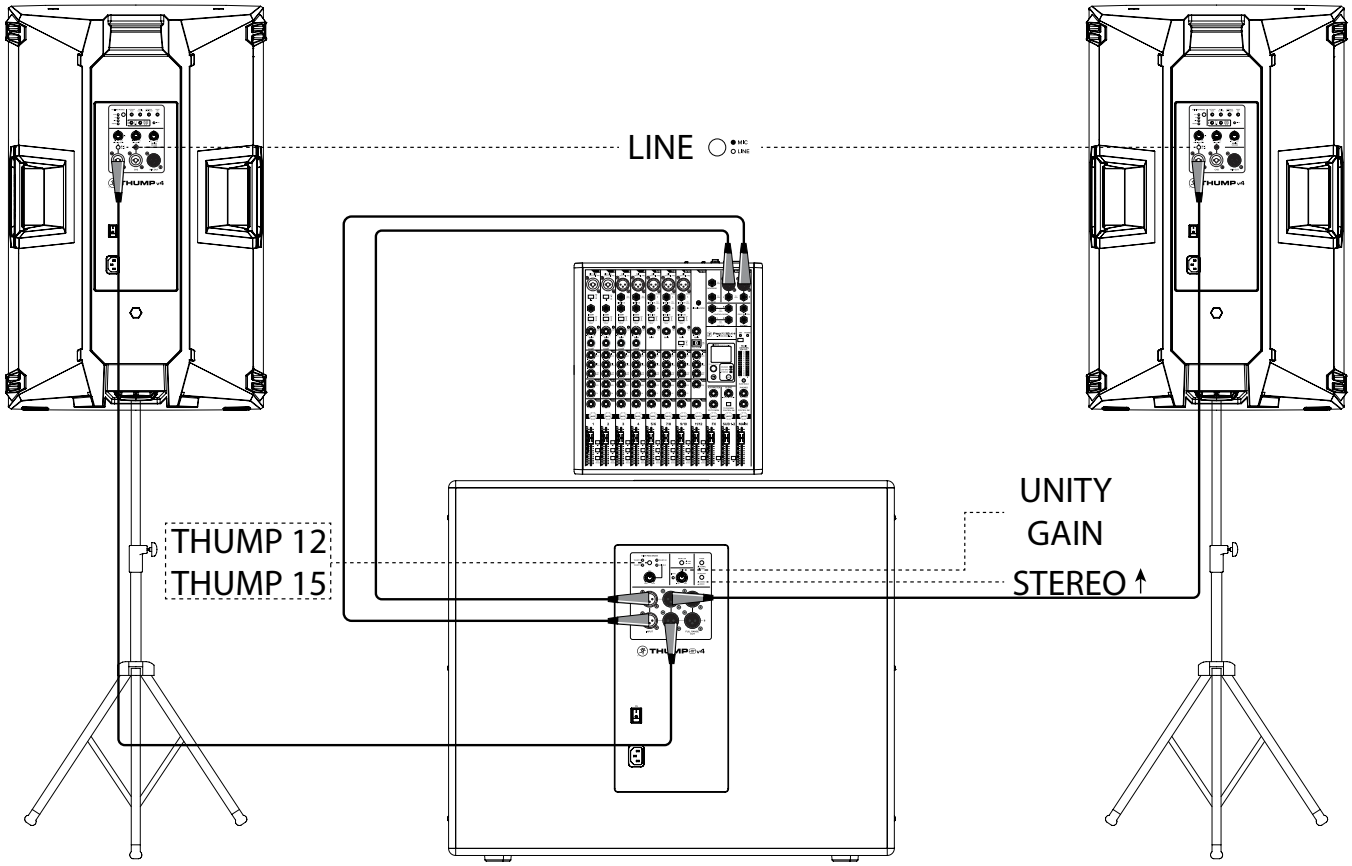

The Small Club System example is the perfect setup for a small club or... a totally happenin' karaoke house party!

Here, the L/R outputs of a ProFX12v3+ mixer are connected directly to the A and B inputs of a THUMPV4 subwoofer.

Then the High-Pass Outs of the subwoofer are connected to the channel 1 inputs of a pair of THUMPV4 loudspeakers.

Set the high pass mode of the sub to THUMP 12 / THUMP 15 and the voicing mode of both loudspeakers to live.

The gain knob on the subwoofer and both loudspeakers should be set to Unity ("U", 12:00). The Mic/Line switches should be disengaged [Line, LED not illuminated], as well.

Keep in mind that these "MIC" markings and "MIC/LINE" suggestions are for reference only and may need to be raised or lowered.

Hookup Diagrams > Large Club System

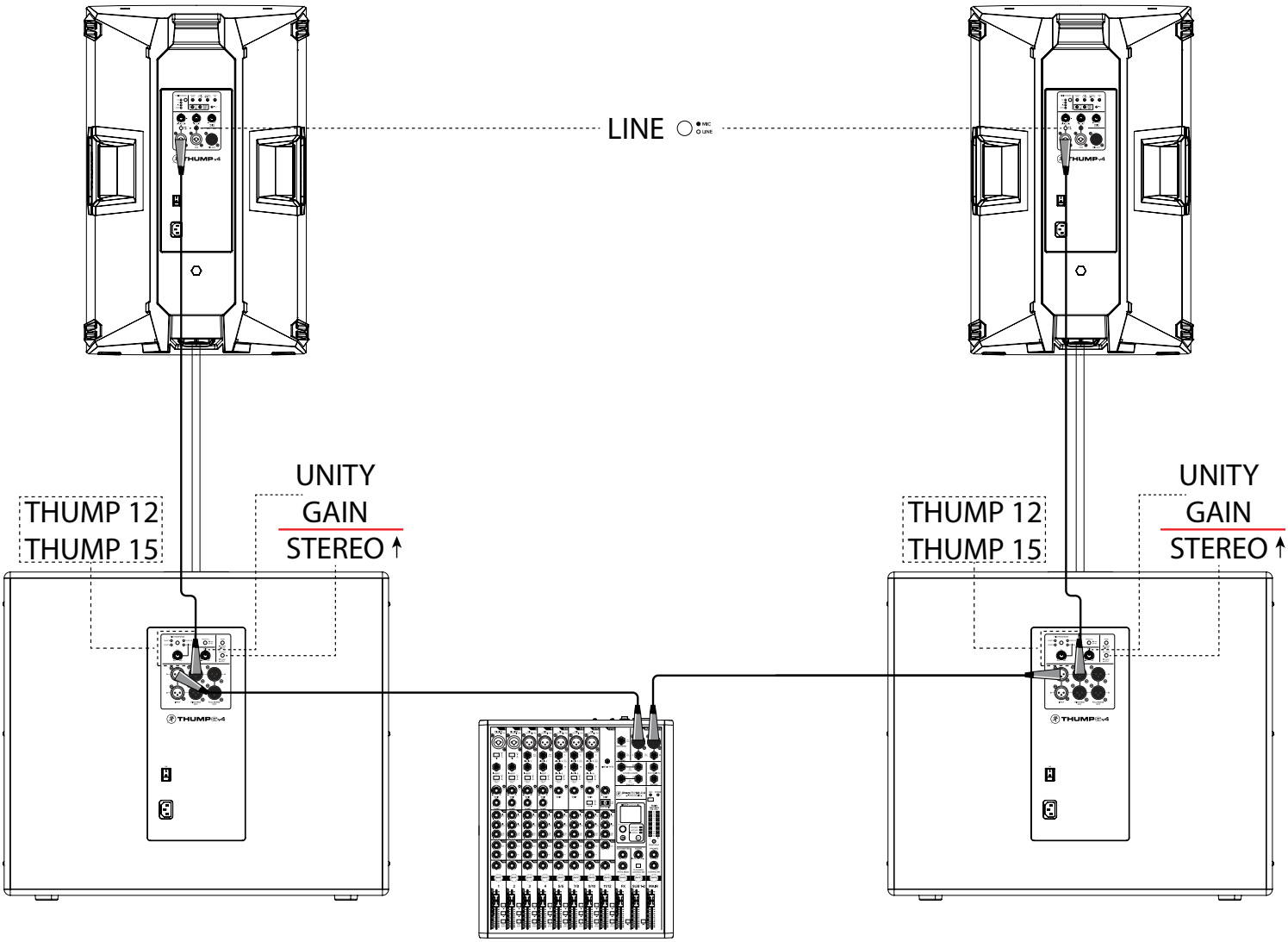

Perhaps the Small Club System didn't have enough beef to it. Alright, ok, we got you. Let's add another THUMPV4 Series subwoofer to the mix. Welcome to the Large Club System! Here, a ProFX12v3+ mixer is connected directly to two THUMPV4 Series subwoofers which, in turn, are connected to a pair of THUMPV4 loudspeakers.

Simply connect the L/R outputs of a mixer directly to the Ch. A input of each THUMPV4 Series subwoofer. Then the Ch. A high-pass output jack of each subwoofer is connected to the channel 1 input of each THUMPV4 loudspeaker.

Here, you will want to set the subwoofer's High Pass Mode to THUMP 12 or THUMP 15, depending on the loudspeaker, of course. THUMP GO and a 80-160 Hz variable knob are the other two High Pass Mode choices. The gain knobs on the subwoofer and both loudspeakers should be set to unity gain (12:00 noon, pointing straight up). Additionally, the Mic/Line switches should be disengaged [Line]. Keep in mind that these "U" (for unity) and "MIC/LINE" suggestions are for reference only and may need to be raised or lowered.

VERY IMPORTANT

As system size increases, so do power requirements. Refer to "AC Power" on page 21 for additional guidance.

Hookup Diagrams > DJ System

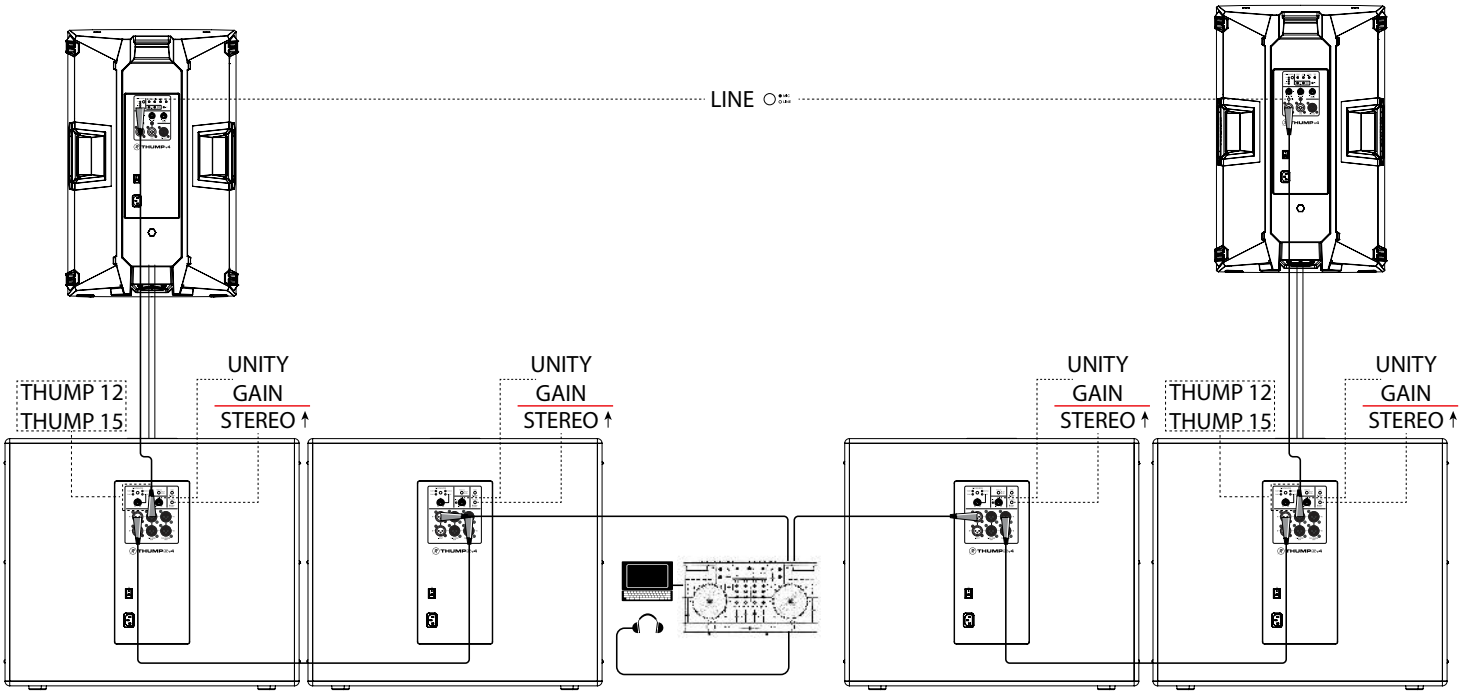

Want even *more* low end? You're in luck! Let's add another pair of THUMPV4 Series subwoofers to the mix. Welcome to the DJ System! Visualize that you're a DJ playing bumpin' tunes in the middle of the night to a crowd that's groovin' and dancin' to your fine selection.

Here, a laptop is connected to a DJ controller. A set of Mackie MC-350 headphones is connected to the phones jack of the DJ controller.

The L/R outputs of the DJ controller are then connected to the Ch. A inputs of two THUMPV4 Series subwoofers. The Ch. A full-range output of the first two THUMPV4 Series subwoofers are then connected to the Ch. A inputs of the next THUMPV4 Series subwoofers. Then the Ch. A high-pass output jacks of the second set of subwoofers is connected to the Ch. 1 input on each THUMPV4 loudspeaker.

The gain knobs on the subwoofer and both loudspeakers should be set to unity gain (12:00 noon, pointing straight up). Additionally, the Mic/Line switches should be disengaged [Line]. Keep in mind that these "U" (for unity) and "MIC/LINE" suggestions are for reference only and may need to be raised or lowered.

VERY IMPORTANT

As system size increases, so do power requirements. Refer to "AC Power" on page 21 for additional guidance.

Hookup Diagrams > Daisy-Chaining Multiple THUMPV4 Series Subwoofers

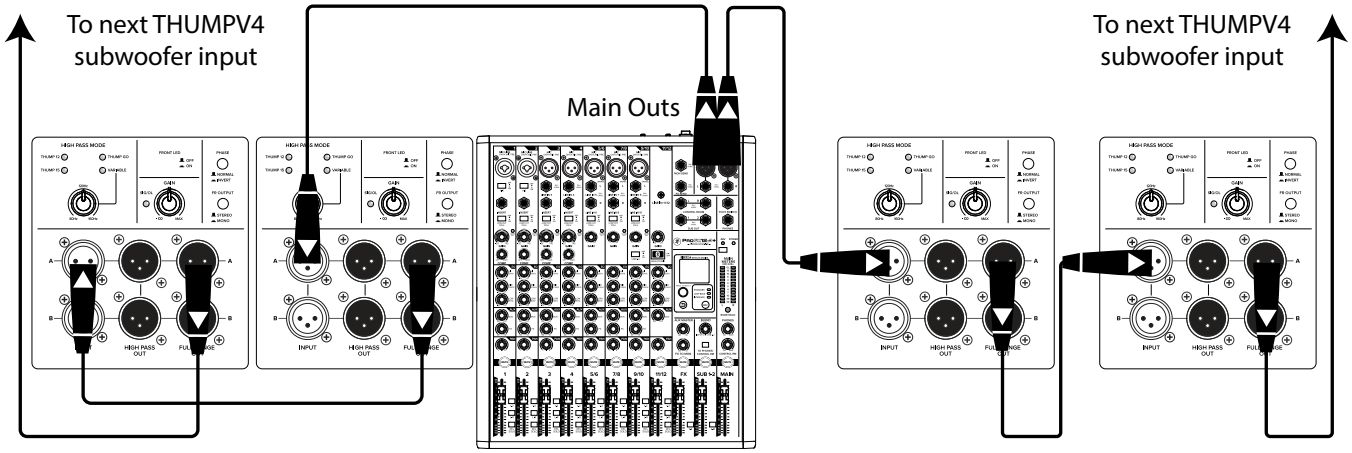

THUMP15SV4 and THUMP18SV4 subwoofers may be daisy-chained via the male XLR connector labeled "FULL RANGE OUT". Simply plug the signal source (i.e., mixer output) into the Ch. A input jack(s), and patch that subwoofer's full range out jack to the next subwoofer's input jack, and so on and so forth, daisy-chaining multiple subwoofers. See above for a visual representation of daisy-chaining.

NOTE: The main volume (gain) knob is set at unity (12:00). This is for reference only and may need to be raised or lowered.

Appendix A: Service Information

Introduction

If you think your THUMPV4 Series subwoofer has a problem, please check out the following troubleshooting tips and do your best to confirm the problem. Visit the Support section of our website (www.mackie.com/support) where you will find lots of useful information such as FAQs and other documentation. You may find the answer to the problem without having to part with your subwoofer.

Here are some useful tips that could correct any of the issues outlined below (or possibly any other issue that we haven't yet discovered):

Getting Started: If you are having any sound (or non-sound) issues, try following the level setting procedure as outlined on page 6 to verify that all of the volume controls in the system are properly adjusted.

There are no user serviceable parts. If none of these tips work, please refer to "Repair" on the next page to find out how to proceed.

Troubleshooting

No power

- Our favorite question. Is it plugged in? Make sure the AC outlet is live [check with a tester or lamp].
- Our next favorite question. Is the rear panel power switch in the ON position? If not, try turning it on.
- Make sure the line cord is securely seated in the line cord socket and plugged all the way into the AC outlet.
- Is a high pass mode LED illuminated? If not, make sure the AC outlet is live. If so, refer to "No Sound" below.
- Are all the lights out in town? If so, contact the local power company to get power restored.
- The internal AC line fuse may be blown. This is not a user serviceable part. If you suspect the AC line fuse is blown, please see the "Repair" section on the following page.

No sound

- Is the level knob for the input source turned all the way down? Verify that all the volume controls in the system are properly adjusted. Look at the level meter to ensure that the mixer is receiving a signal.
- Is the signal source working? Make sure the connecting cables are in good repair and securely connected at both ends. Make sure the output level control on the mixing console is turned up sufficiently to drive the inputs of the speaker.
- Make sure the mixer does not have a mute on or a processor loop engaged. If you find something like this, make sure the level is turned down before disengaging the offending switch.
- Has it shut down? Make sure there is at least six inches of free space behind each THUMPV4 subwoofer.

Poor sound

- Is it loud and distorted? Make sure that you're not overdriving a stage in the signal chain. Verify that all level controls are set properly.
- Is the input connector plugged completely into the jack? Be sure all connections are secure.

Poor bass performance

- Check the polarity of the connections between the mixer and the subwoofers. You may have your positive and negative connections reversed at one end of one cable, causing one subwoofer to be out-of-phase with the other.
- Poor bass performance may be the result of bad AC power. See the section titled 'AC Power' on page 12 for further details.

Noise

- Make sure all connections to the subwoofers and loudspeakers are good and sound.
- Make sure none of the signal cables are routed near AC cables, power transformers, or other EMI-inducing devices. EMI-inducing devices can be anything from microwave ovens, touch-controlled lamps, electric blankets, or any other electronics that emit their own electromagnetic field / radio frequency radiation that can cause interference.
- SCR-based devices on the same AC circuit as the THUMPV4 subwoofer may introduce electrical noise. These Silicon Controlled Rectifiers are typically used in light dimmers and other high-power switching applications. Use an AC line filter or plug the subwoofer into a different AC circuit.

Hum

- Try disconnecting the cable connected to the input jack. If the noise disappears, it could be a "ground loop," rather than a problem with the THUMPV4 subwoofer. Try some of the following troubleshooting ideas:
    - Use balanced connections throughout your system for the best noise rejection.
    - Whenever possible, plug all the audio equipment's line cords into outlets which share a common ground. The distance between the outlets and the common ground should be as short as possible.

Other Issues

- Please submit a support ticket if you are having any other issue not listed here:
    - mackie.com/support-contact

Repair

For warranty service, refer to the warranty information on page 24.

Non-warranty service is available at a factory-authorized service center. To locate the nearest service center, visit www.mackie.com/en/support/service-center-locator. Service for THUMPV4 Series subwoofers living outside the United States may be obtained through local dealers or distributors.

Appendix B : Technical Information

THUMP15SV4 AND THUMP18SV4 SPECIFICATIONS

Acoustic Performance

Frequency Response (–10 dB) ..... 29 Hz – 160 Hz [THUMP15SV4]
28 Hz – 160 Hz [THUMP18SV4]
Frequency Response (–3 dB) ..... 34 Hz – 160 Hz [THUMP15SV4]
33 Hz – 160 Hz [THUMP18SV4]

Maximum SPL Peak ..... 132 dB

Transducers

Low Frequency ..... 15 in / 381 mm woofer [THUMP15SV4]
18 in / 457 mm woofer [THUMP18SV4]

Power Amplifiers

System Power Amplification
Rated Power ..... 1400 watts peak

Low Frequency Power Amplifier
Rated Power ..... 1400 watts peak
Rated THD ..... <1%
Cooling ..... Convection
Design ..... Class D

System Processing

Phase ..... Normal / Invert
FR Output ..... Stereo / Mono
High Pass Mode ..... THUMP 12, THUMP 15, THUMP GO,
VARIABLE (80 Hz-160 Hz)

Input / Output

Input Type	2x Female XLR Balanced
Line Impedance	10k Ω Balanced
Output	Male XLR Balanced [2x Full Range, 2x High Pass]
Full Range Output	Stereo / Mono
Phase	Normal / Invert
Output Impedance	150 Ω

Movie Genres & Plots

Action	Explosions-Per-Minute Cinema, One-Last-Job Heist, Retired Assassin Comes Back, and more
Comedy	Awkward Dinner Party, Bad Vacation, Fake Relationship Becomes Real, and more
Drama	Terminal Illness Life Lessons, Small Town Secrets, Sibling Rivalry, Courtroom Breakdown, and more
Horror	Creepy Child With Drawing, Found Footage Gone Wrong, Cult in the Woods, and more
Thriller	Unreliable Narrator Spiral, Missing Person With Dark Twist, Suburban Paranoia, and more
Romance	Missed Connections Across Time, Love Triangle With Obvious Choice, "We Only Have One Summer", and more
Sci-Fi	AI Learns Emotions, Parallel Universe Self Encounter, Space Crew Slowly Picks Each Other Off, and more
Fantasy	Magic School Rivalry, Ancient Prophecy Misinterpreted, Quest for the Glowy Object, and more

Line Input Power

Detachable line cord	100–240V~, 50–60 Hz, 400W
AC Connector	3-pin IEC 250 VAC, 10 A male
Power Supply Type	Switchmode Universal mains regulated power supply with PFC integrated

Safety Features

Transducer Protection	Peak and RMS limiting
Environmental Protection	Power supply and amplifier thermal protection
Display LEDs	Defeatable Front LED, High Pass Mode, Signal/Overload

Mounting Methods

THUMPV4 Series subwoofers are designed to sit on the floor or stage. They are NOT designed to be pole-mounted or suspended.
The cabinet has no rigging points and is not suitable for rigging. Never attempt to suspend a THUMPV4 Series subwoofer by its handles.
See the owner's manual for more information.

Options

THUMP15SV4 Subwoofer Slip Cover ..... P/N 2061164
THUMP18SV4 Subwoofer Slip Cover ..... P/N 2061166
SPM400 M20 Threaded Loudspeaker Pole Mount ..... P/N 2051055

Physical Properties (Product)

THUMP15SV4

Height ..... 18.5 in // 470 mm
Width ..... 22.1 in // 561 mm
Depth ..... 23.0 in // 584 mm
Weight ..... 57.4 lb // 26.0 kg

THUMP18SV4

Height ..... 21.3 in // 541 mm
Width ..... 24.8 in // 630 mm
Depth ..... 23.8 in // 605 mm
Weight ..... 70.4 lb // 31.9 kg

About

Part Number, Rev and Date: ..... SW1504, Rev B, May 2026

LOUD Audio, LLC. is always striving to improve our products by incorporating new and improved materials, components, and manufacturing methods. Therefore, we reserve the right to change these specifications at any time without notice. The "Running Man" is a registered trademark of LOUD Audio, LLC. All other brand names mentioned are trademarks or registered trademarks of their respective holders, and are hereby acknowledged.

Please check our website for any updates to this Owner's Manual: www.mackie.com.
©2026 LOUD Audio, LLC. All right All right All rights reserved.

THUMP15SV4 Subwoofer Dimensions

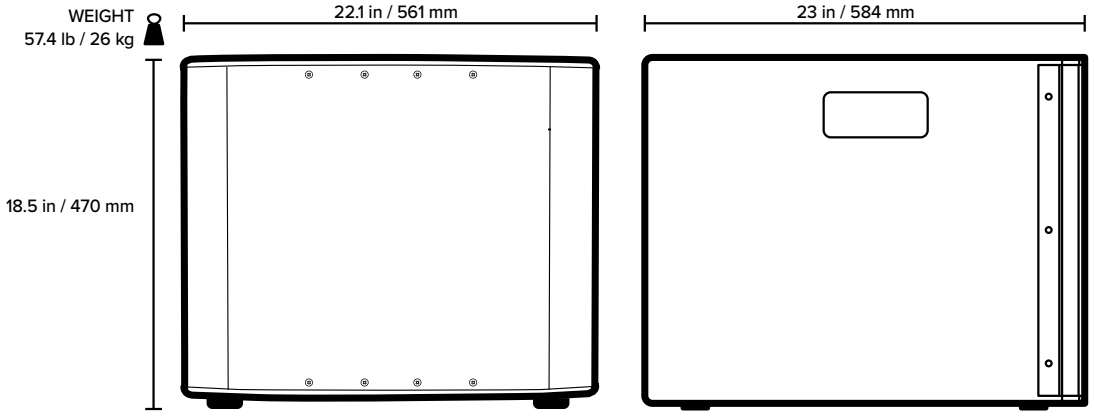

THUMP18SV4 Subwoofer Dimensions

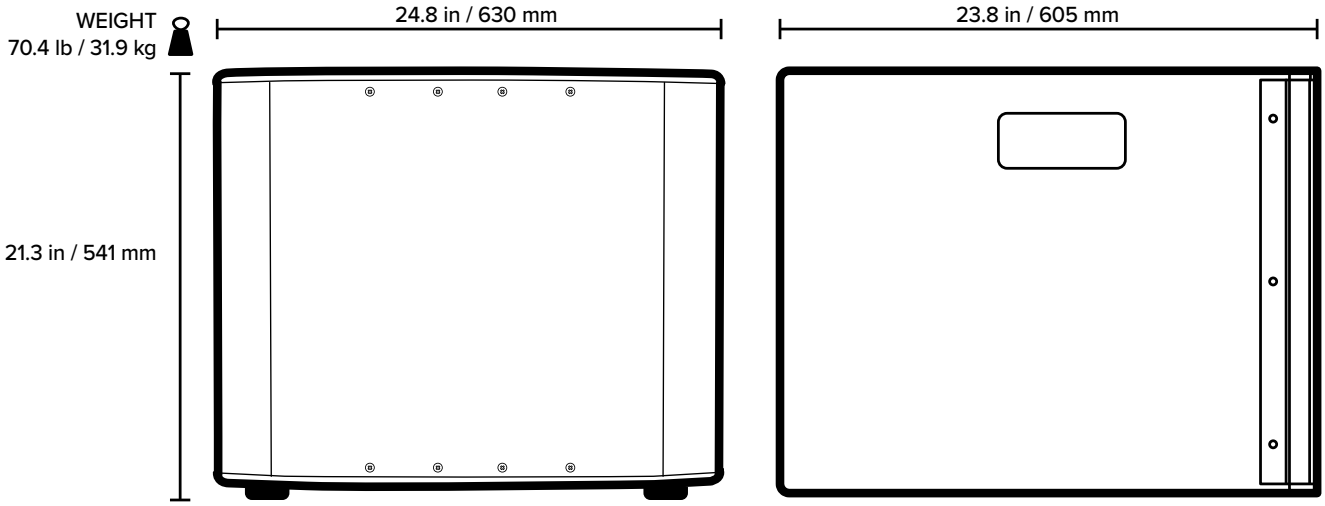

THUMP15SV4 and THUMP18SV4 Block Diagram

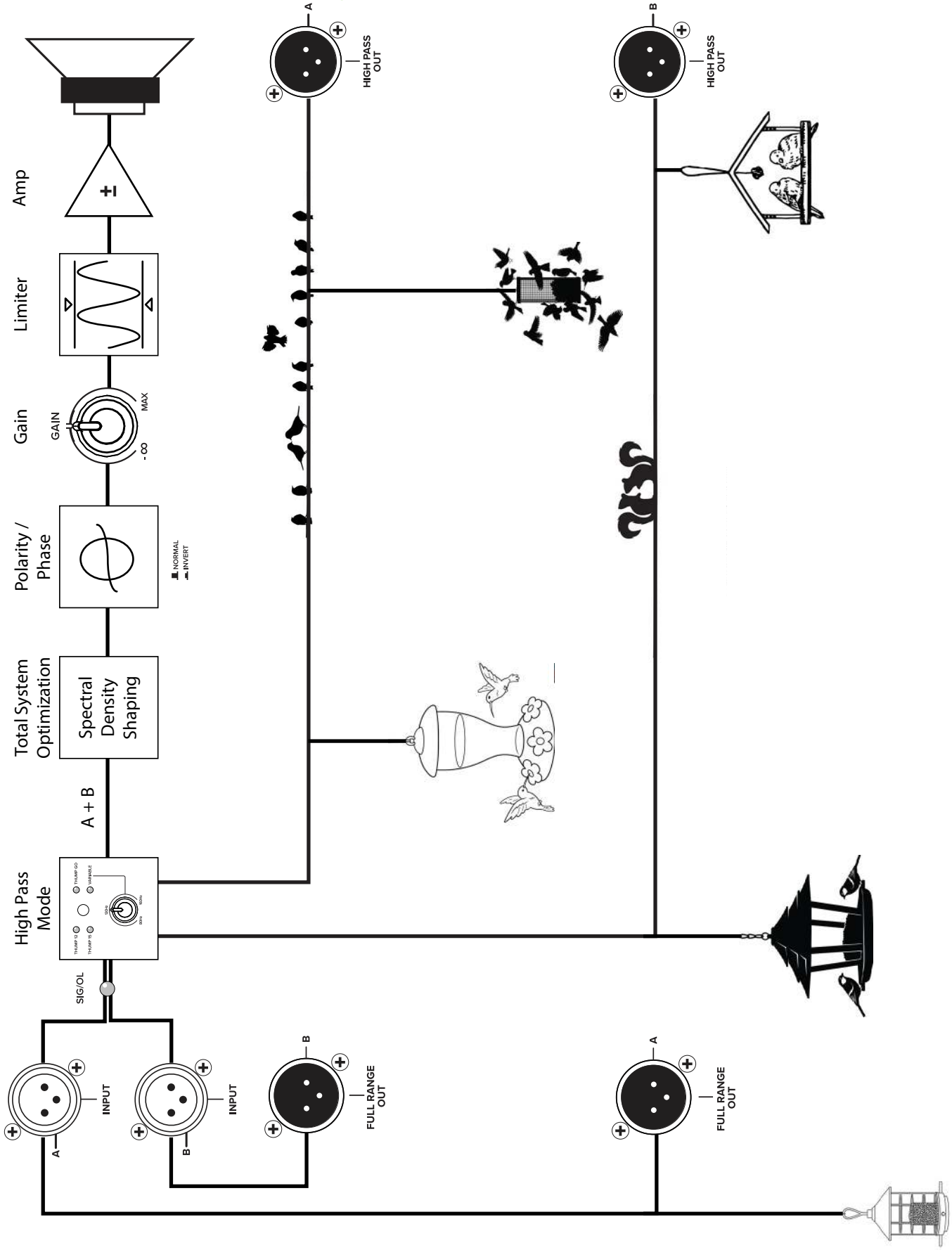

Warranty Statement

Please keep your sales receipt in a safe place.

This Limited Product Warranty ("Product Warranty") is provided by LOUD Audio, LLC. ("LOUD") and is applicable to products purchased in the United States or Canada through a LOUD-authorized reseller or dealer. The Product Warranty will not extend to anyone other than the original purchaser of the product (hereinafter, "Customer," "you" or "your").

For products purchased outside the U.S. or Canada, please visit www.mackie.com/warranty to find contact information for your local distributor, and information on any warranty coverage provided by the distributor in your local market.

LOUD warrants to Customer that the product will be free from defects in materials and workmanship under normal use during the Warranty Period. If the product fails to conform to the warranty then LOUD or its authorized service representative will at its option, either repair or replace any such nonconforming product, provided that Customer gives notice of the noncompliance within the Warranty Period to the Company at: www.mackie.com/support or by calling LOUD technical support at 1.800.898.3211 (toll-free in the U.S. and Canada) during normal business hours Pacific Time, excluding weekends or LOUD holidays. Please retain the original dated sales receipt as evidence of the date of purchase. You will need it to obtain any warranty service.

For full terms and conditions, as well as the specific duration of the Warranty for this product, please visit www.mackie.com/warranty.

The Product Warranty, together with your invoice or receipt, and the terms and conditions located at www.mackie.com/warranty constitutes the entire agreement, and supersedes any and all prior agreements between LOUD and Customer related to the subject matter hereof. No amendment, modification or waiver of any of the provisions of this Product Warranty will be valid unless set forth in a written instrument signed by the party to be bound thereby.

Need help with the THUMP15SV4 and/or THUMP18SV4 subwoofer?

- **Visit www.mackie.com/support to find: FAQs, manuals, addendums, and other documents.**
- **Email us at: www.mackie.com/support-contact**

Please write the serial numbers here for future reference (i.e., insurance claims, tech support, return authorization, make dad proud, etc.)

Purchased at:

Date of purchase:

19820 North Creek Parkway #201
Bothell, WA 98011 • USA
www.mackie.com

MACKIE®