Optoma

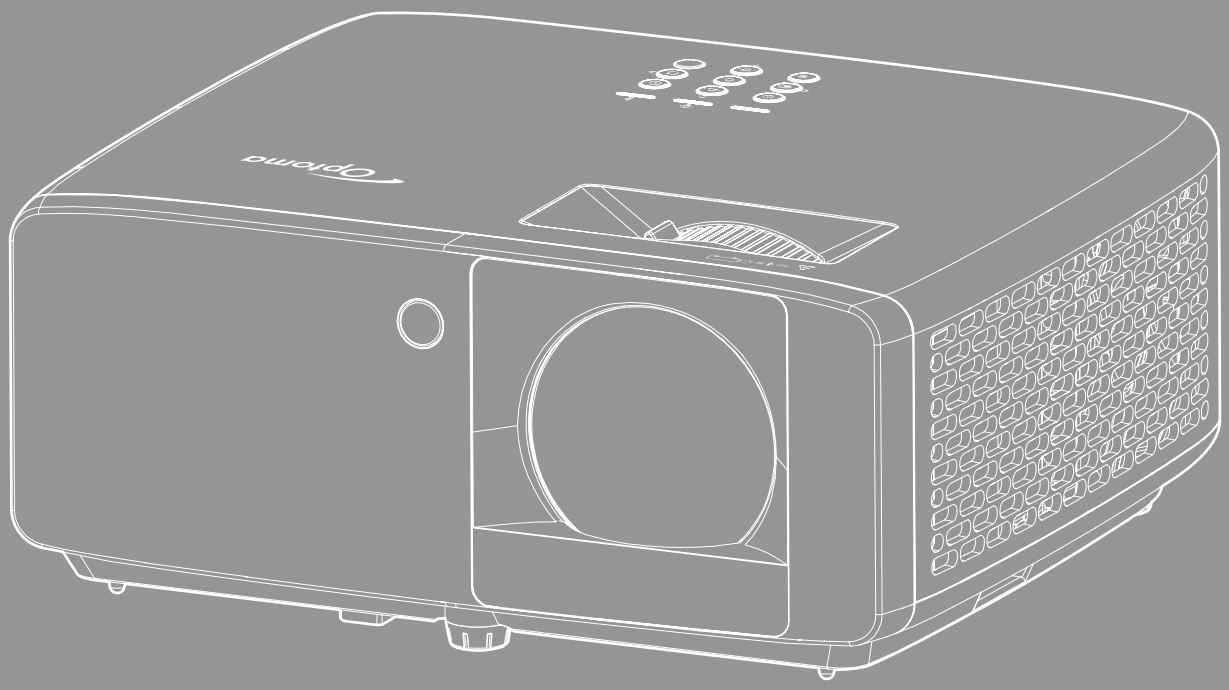

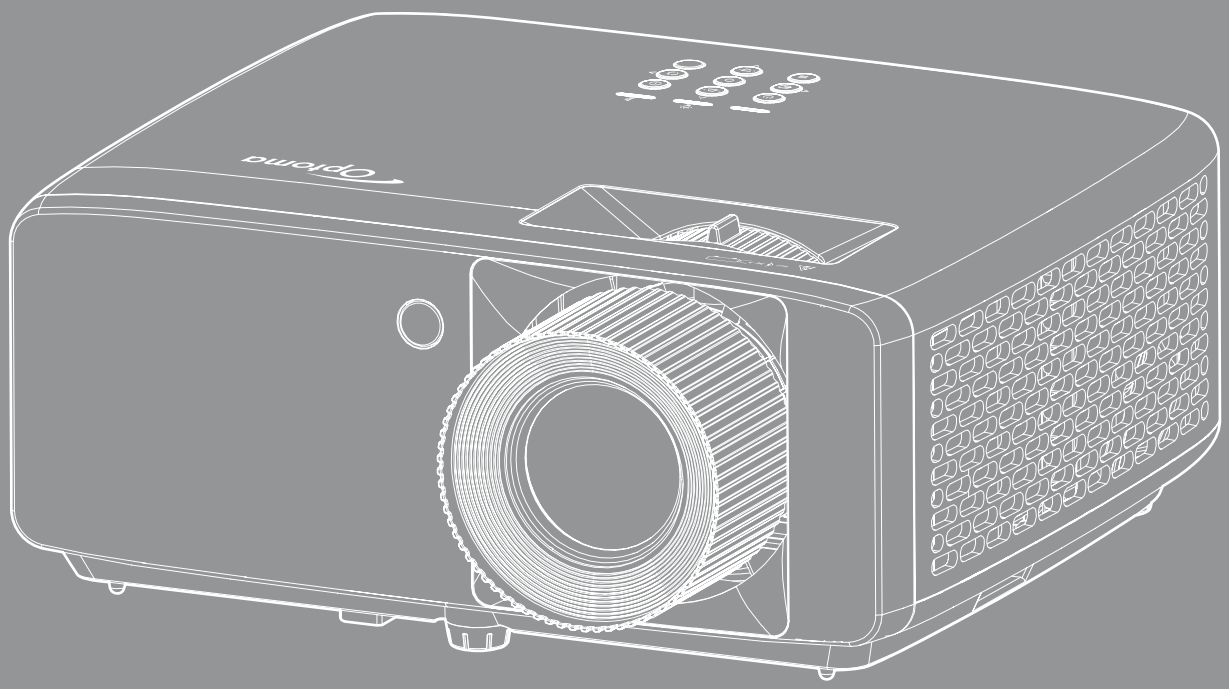

HDMI HIGH-DEFINITION MULTIMEDIA INTERFACE

DLP TEXAS INSTRUMENTS

3D Full

TABLE OF CONTENTS

SAFETY 4

Important Safety Instruction 4
Laser Radiation Safety Information 5
Laser Notice 6
Copyright 7
Disclaimer 7
Trademark Recognition 7
FCC 7
Declaration of Conformity for EU countries 8
WEEE 8
Specifications and Warning labels 8
cTUVus 9
Cleaning the Lens 9

INTRODUCTION 10

Package Overview 10
Standard accessories 10
Product Overview 11
Connections 12
Keypad 13
Remote control 14

SETUP AND INSTALLATION 16

Installing the projector 16
Connecting sources to the projector 18
Adjusting the projector image 19
Remote setup 21

USING THE PROJECTOR 23

Powering on / off the projector 23
Selecting an input source 24
Menu navigation and features 25
OSD Menu tree 26
Image picture mode menu 33
Image dynamic range menu 34
Image brightness menu 34
Image contrast menu 34
Image sharpness menu 34
Image gamma menu 34
Image color settings menu 34
Image wall color menu 35
Image 3D menu 35
Image reset menu 35

Display projection orientation menu *36*
Display light source mode menu *36*
Display low latency mode menu *36*
Display screen type menu *36*
Display aspect ratio menu *37*
Display geometric correction menu *38*
Display digital zoom menu *38*
Display image shift menu *38*
Display digital lens shift menu *38*
Display signal menu *38*
Display reset menu *39*
Setup test pattern menu *40*
Setup language menu *40*
Setup menu settings menu *40*
Setup high altitude menu *40*
Setup power settings menu *40*
Setup security menu *41*
Setup startup logo menu *41*
Setup background color menu *41*
Setup system update menu *42*
Setup reset menu *42*
Input auto source menu *43*
Input auto input switch menu *43*
Input HDMI CEC settings menu *43*
Input wireless display menu *44*
Input quick search menu *45*
Input reset menu *45*
Audio volume menu *46*
Audio mute menu *46*
Audio reset menu *46*
Control device ID menu *47*
Control remote settings menu *47*
Control keypad settings menu *47*
Control LAN menu *47*
Control control menu *50*
Setup network control settings menu *51*
Control reset menu *60*
Information menu *61*

ADDITIONAL INFORMATION 62

Compatible resolutions *62*
Image size and projection distance *66*
Projector dimensions and ceiling mount installation *69*
IR remote control codes *72*
Optoma Management Suite (OMS) binding *77*
Troubleshooting *80*
Warning indicators *82*
Specifications *83*
Optoma global offices *85*

SAFETY

	The lightning flash with arrow head within an equilateral triangle is intended to alert the user to the presence of uninsulated "dangerous voltage" within the product's enclosure that may be of sufficient magnitude to constitute a risk of electric shock to persons.
	The exclamation point within an equilateral triangle is intended to alert the user to the presence of important operating and maintenance (servicing) instructions in the literature accompanying the appliance.

Please follow all warnings, precautions and maintenance as recommended in this user's guide.

Important Safety Instruction

- Do not block any ventilation openings. To ensure reliable operation of the projector and to protect from over heating, it is recommended to install the projector in a location that does not block ventilation. As an example, do not place the projector on a crowded coffee table, sofa, bed, etc. Do not put the projector in an enclosure such as a book case or a cabinet that restricts air flow.
- To reduce the risk of fire and/or electric shock, do not expose the projector to rain or moisture. Do not install near heat sources such as radiators, heaters, stoves or any other apparatus such as amplifiers that emits heat.
- Do not let objects or liquids enter the projector. They may touch dangerous voltage points and short out parts that could result in fire or electric shock.
- Do not use under the following conditions:
  - In extremely hot, cold or humid environments.
    - (i) Ensure that the ambient room temperature is within 5°C ~ 40°C
    - (ii) Relative humidity is 10% ~ 85%
  - In areas susceptible to excessive dust and dirt.
  - Near any appliance generating a strong magnetic field.
  - In direct sunlight.
- Do not use the unit if it has been physically damaged or abused. Physical damage/abuse would be (but not limited to):
  - Unit has been dropped.
  - Power supply cord or plug has been damaged.
  - Liquid has been spilled on to the projector.
  - Projector has been exposed to rain or moisture.
  - Something has fallen in the projector or something is loose inside.
- Do not place the projector on an unstable surface. The projector may fall over resulting in injury or the projector may become damaged.
- Do not block the light coming out of the projector lens when in operation. The light will heat the object and may melt, cause burns or start a fire.
- Please do not open or disassemble the projector as this may cause electric shock.
- Do not attempt to service the unit yourself. Opening or removing covers may expose you to dangerous voltages or other hazards. Please call Optoma before you send the unit for repair.
- See projector enclosure for safety related markings.
- The unit should only be repaired by authorized service personnel.
- Only use attachments/accessories specified by the manufacturer.
- Do not look straight into the projector lens during operation. The bright light may harm your eyes.
- This projector will detect the life of the light source itself.

- When switching the projector off, please ensure the cooling cycle has been completed before disconnecting power. Allow 90 seconds for the projector to cool down.
- Turn off and unplug the power plug from the AC outlet before cleaning the product.
- Use a soft dry cloth with mild detergent to clean the display housing. Do not use abrasive cleaners, waxes or solvents to clean the unit.
- Disconnect the power plug from AC outlet if the product is not being used for a long period of time.
- Do not setup the projector in places where it might be subjected to vibration or shock.
- Do not touch the lens with bare hands.
- Remove battery/batteries from remote control before storage. If the battery/batteries are left in the remote for long periods, they may leak.
- Do not use or store the projector in places where smoke from oil or cigarettes may be present, as it can adversely affect the quality of the projector performance.
- Please follow the correct projector orientation installation as non standard installation may affect the projector performance.
- Use a power strip and/or surge protector. As power outages and brown-outs can KILL devices.

Laser Radiation Safety Information

- This product is classified as CLASS 1 LASER PRODUCT - RISK GROUP 2 of IEC60825-1 : 2014 and also complies with 21 CFR 1040.10 and 1040.11 as a Risk Group 2, LIP (Laser Illuminated Projector) as defined in IEC 62471:5:Ed. 1.0. For more information see Laser Notice No. 57, dated May 8, 2019.
- Complies with 21 CFR 1040.10 and 1040.11 except for conformance as a Risk Group 2 LIP as defined in IEC 62471-5:Ed. 1.0. For more information see Laser Notice No. 57, dated May 8, 2019.
- IEC 60825-1:2014/EN 60825-1+A11/EN50689:2021 CLASS 1 CONSUMER LASER PRODUCT RISK GROUP 2
- IEC 62471-5:2015 RISK GROUP 2

IEC 60825-1:2014, EN 60825-1:2014+A11:2021, EN 50689:2021 CLASS 1 CONSUMER LASER PRODUCT RISK GROUP 2, Complies with 21 CFR 1040.10 and 1040.11 except for conformance as a Risk Group 2 LIP as defined in IEC 62471-5:Ed.1.0. For more information see Laser Notice No. 57, dated May 8, 2019.
IEC 60825-1:2014 等級1雷射產品RG2危險等級
IEC 60825-1:2014 1类激光产品RG2危险等级

WARNING: MOUNT ABOVE THE HEADS OF CHILDREN!
Do not look into the beam less than 1m.
No direct eye exposure to the beam is permitted.

"AVERTISSEMENT:INSTALLER AU-DESSUS DE LA TETE DES ENFANTS."
Avertissement supplémentaire contre l'exposition oculaire pour des expositions à une distance de moins de 1m.

「警告：安裝高於兒童頭頂！」
請勿在距離小於1米的範圍內直視光束，嚴禁眼睛直接暴露於光束中。

「警告：安裝高于儿童头顶！」
请勿在距离小于1米的范围内直视光束，严禁眼睛直接暴露于光束中。

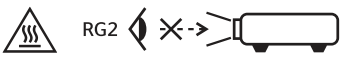

- Additional instructions to supervise children, no staring, and not use optical aids.
- Additional instructions to install above the reach of children.
- Notice is given to supervise children and to never allow them to stare into the projector beam at any distance from the projector.
- Notice is given to use caution when using the remote control for starting the projector while in front of the projection lens.
- Notice is given to the user to avoid the use of optical aids such as binoculars or telescopes inside the beam.
- As with any bright source, do not stare into the direct beam, RG2 IEC 62471-5:2015.
- WARNING: MOUNT ABOVE THE HEADS OF CHILDREN. The use of a ceiling mount is

recommended with this product to place it above the eyes of children.

- Caution - use of controls or adjustments or performance of procedures other than those specified herein may result in hazardous radiation exposure.
- Do not open or disassemble the projector as this may cause damage by the exposure of laser radiation.
- Do not stare into beam when the projector is on. The bright light may result in permanent eye damage.

Not following the control, adjustment or operation procedure may cause damage by the the exposure of laser radiation.

Laser Notice

IEC 60825-1:2014/EN 60825-1+A11/EN50689:2021 CLASS 1 CONSUMER LASER PRODUCT RISK GROUP 2.

The product's intended use as a consumer laser product and compliant with EN 50689:2021.

CLASS 1 CONSUMER LASER PRODUCT

EN 50689:2021

Copyright

This publication, including all photographs, illustrations and software, is protected under international copyright laws, with all rights reserved. Neither this manual, nor any of the material contained herein, may be reproduced without written consent of the author.

© Copyright 2025

Disclaimer

The information in this document is subject to change without notice. The manufacturer makes no representations or warranties with respect to the contents hereof and specifically disclaims any implied warranties of merchantability or fitness for any particular purpose. The manufacturer reserves the right to revise this publication and to make changes from time to time in the content hereof without obligation of the manufacturer to notify any person of such revision or changes.

Trademark Recognition

Kensington is a U.S. registered trademark of ACCO Brand Corporation with issued registrations and pending applications in other countries throughout the world.

HDMI, the HDMI Logo, and High-Definition Multimedia Interface are trademarks or registered trademarks of HDMI Licensing LLC in the United States and other countries.

DLP®, DLP Link and the DLP logo are registered trademarks of Texas Instruments and BrilliantColor™ is a trademark of Texas Instruments.

All other product names used in this manual are the properties of their respective owners and are Acknowledged.

FCC

This device has been tested and found to comply with the limits for a Class B digital device pursuant to Part 15 of the FCC rules. These limits are designed to provide reasonable protection against harmful interference in a residential installation. This device generates, uses and can radiate radio frequency energy and, if not installed and used in accordance with the instructions, may cause harmful interference to radio communications.

However, there is no guarantee that interference will not occur in a particular installation. If this device does cause harmful interference to radio or television reception, which can be determined by turning the device off and on is encouraged to try to correct the interference by one or more of the following measures:

- Reorient or relocate the receiving antenna.
- Increase the separation between the device and receiver.
- Connect the device into an outlet on a circuit different from that to which the receiver is connected.
- Consult the dealer or an experienced radio/television technician for help.

Notice: Shielded cables

All connections to other computing devices must be made using shielded cables to maintain compliance with FCC regulations.

Caution

Changes or modifications not expressly approved by the manufacturer could void the user's authority, which is granted by the Federal Communications Commission, to operate this projector.

Operation Conditions

This device complies with Part 15 of the FCC Rules. Operation is subject to the following two conditions:

1. This device may not cause harmful interference and
2. This device must accept any interference received, including interference that may cause undesired operation.

Notice: Canadian users

This Class B digital apparatus complies with Canadian ICES-003.

Remarque à l'intention des utilisateurs canadiens

Cet appareil numerique de la classe B est conforme a la norme NMB-003 du Canada.

Declaration of Conformity for EU countries

- EMC Directive 2014/30/EU (including amendments)
- Low Voltage Directive 2014/35/EU
- RED 2014/53/EU (if product has RF function)

WEEE

Disposal instructions

Do not throw this electronic device into the trash when discarding. To minimize pollution and ensure utmost protection of the global environment, please recycle it.

Specifications and Warning labels

Specifications and Warning labels are placed at the following location:

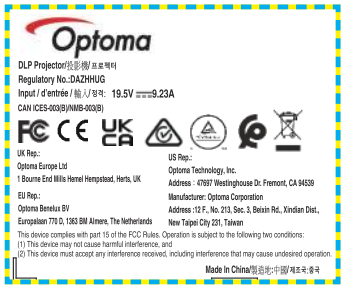

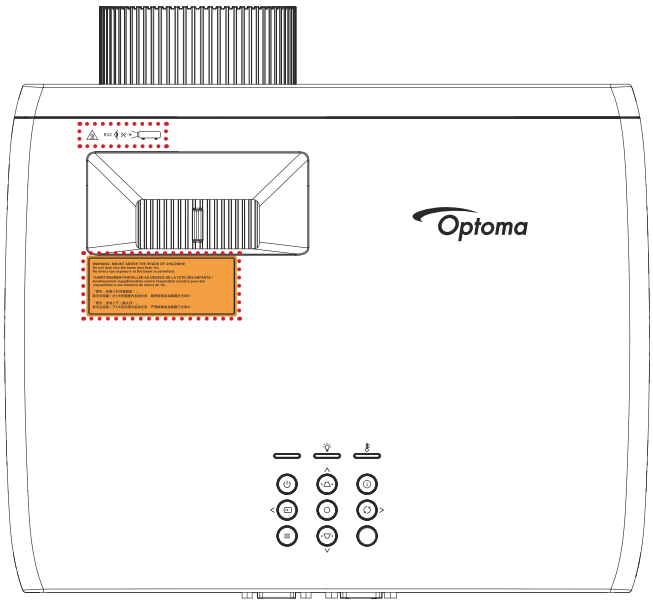

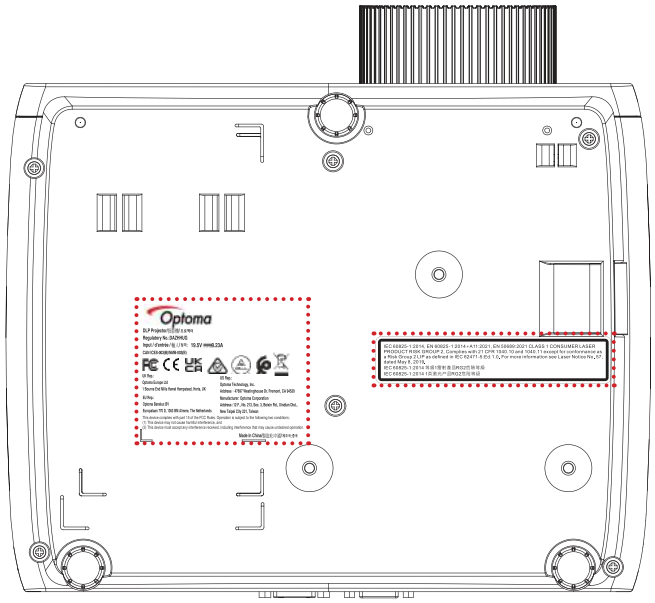

Note: *For power supply, power ratings, and product information, please refer to the label on the bottom of the product.*

cTUVus

Cleaning the Lens

- Before cleaning the lens, be sure to turn off the projector and unplug the power cord to allow it to completely cool down.
- Use a compressed air tank to remove the dust.

Use a special cloth for cleaning lens and gently wipe the lens. Do not touch the lens with your fingers.

- Do not use alkaline/acid detergents or volatile solvents such as alcohol for cleaning lens. If the lens is damaged due to the cleaning process, it is not covered by the warranty.

Warning: Do not use a spray containing flammable gases to remove dust or dirt from the lens. This may cause a fire due to excessive heat inside the projector.

Warning: Do not clean the lens if the projector is warming up as this may cause the lens' surface film to peel off.

Warning: Do not wipe or tap the lens with a hard object.

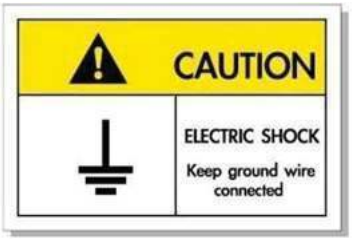

To avoid electric shock, the unit and its peripherals must be properly grounded (earthed).

INTRODUCTION

Thank you for purchasing an Optoma laser projector. For full list of features please visit the product page on our website, where you will also find additional information and documentation such as FAQs.

Package Overview

Carefully unpack and verify that you have the items listed below under standard accessories. Some of the items under optional accessories may not be available depending on the model, specification and your region of purchase. Please check with your place of purchase. Some accessories may vary from region to region.

The warranty card is only supplied in some specific regions. Please consult your dealer for detailed information.

Standard accessories

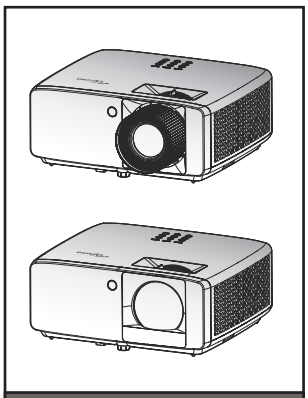

Projector

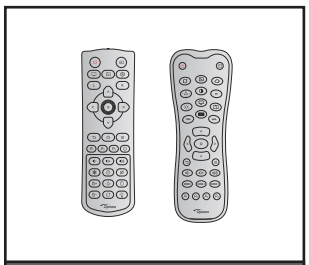

Remote control

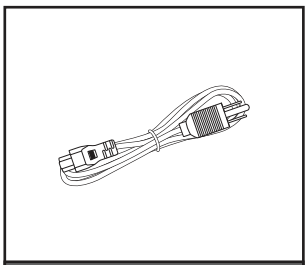

Power cable

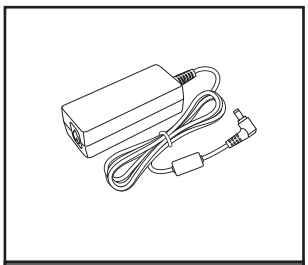

Power adapter

- ☑ Warranty Card*
- ☑ Quick start user manual

Documentation

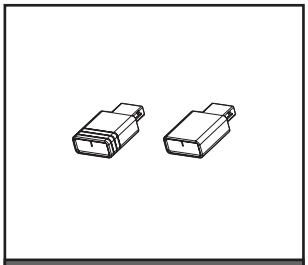

Wi-Fi dongle and BT dongle (optional)

Note:

- *The remote control is shipped with batteries.*
- **For warranty Information, please visit https://www.optoma.com/support/download*
- *For access to the setup information, user manual, warranty information, and product updates – please scan the QR Code or visit the following URL: https://www.optoma.com/support/download*

INTRODUCTION

Product Overview

Standard model

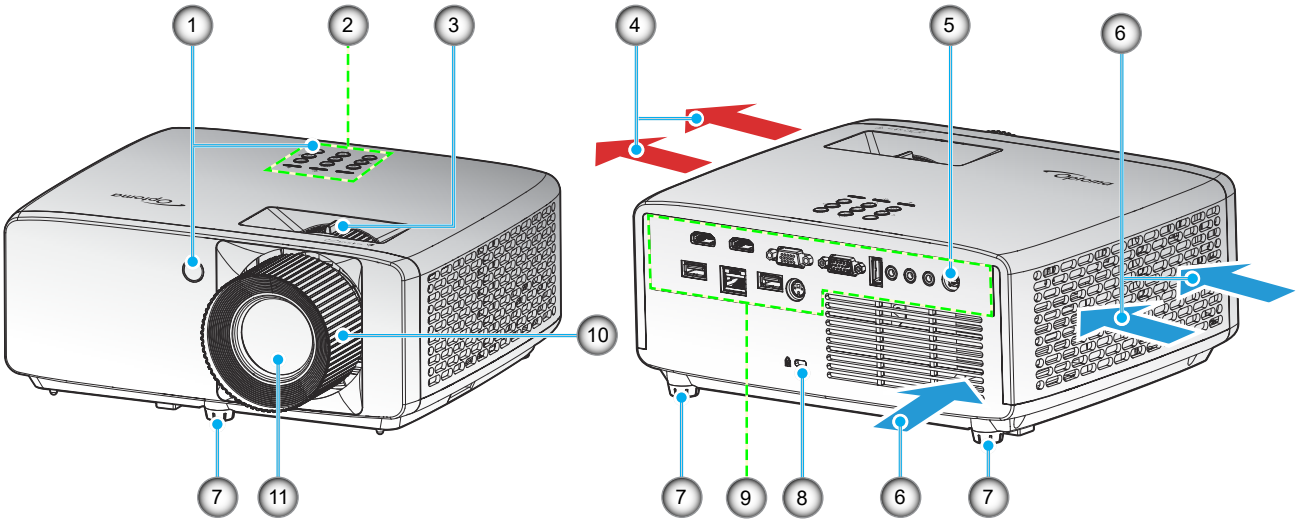

Short-Throw model

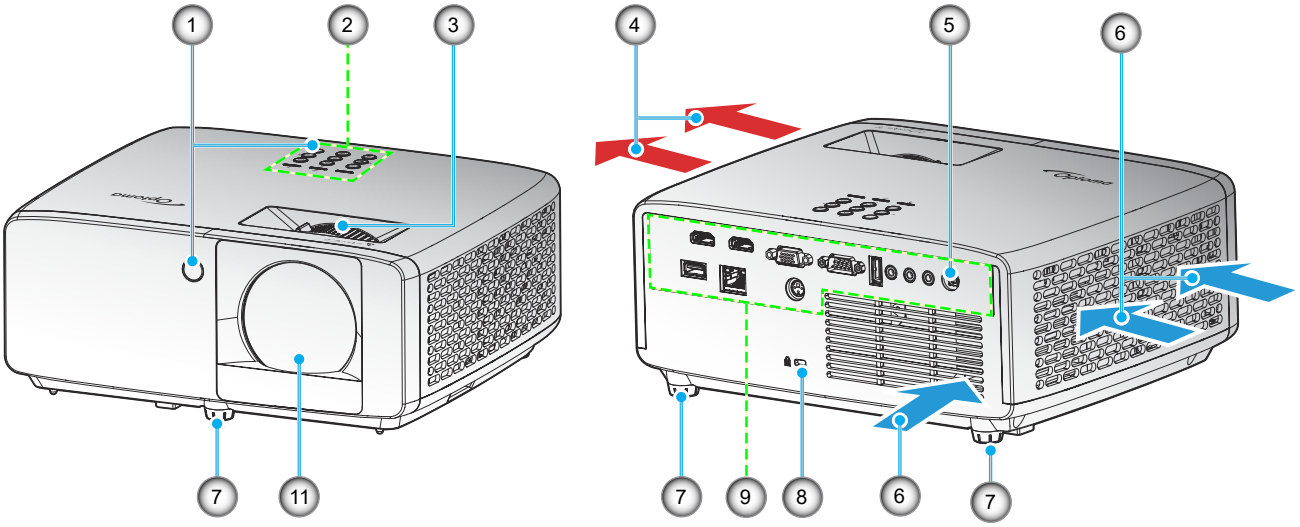

Note:

- *Do not block projector intake and exhaust vents.*
- *When operating the projector in an enclosed space, allow at least 30 cm clearance around the intake and exhaust vents.*

No	Item	No	Item
1.	IR Receivers	7.	Tilt-Adjustment Feet
2.	Keypad	8.	Kensington™ Lock Port
3.	Zoom Lever	9.	Input / Output
4.	Ventilation (outlet)	10.	Focus Ring
5.	DC Jack	11.	Lens
6.	Ventilation (inlet)		

INTRODUCTION

Connections

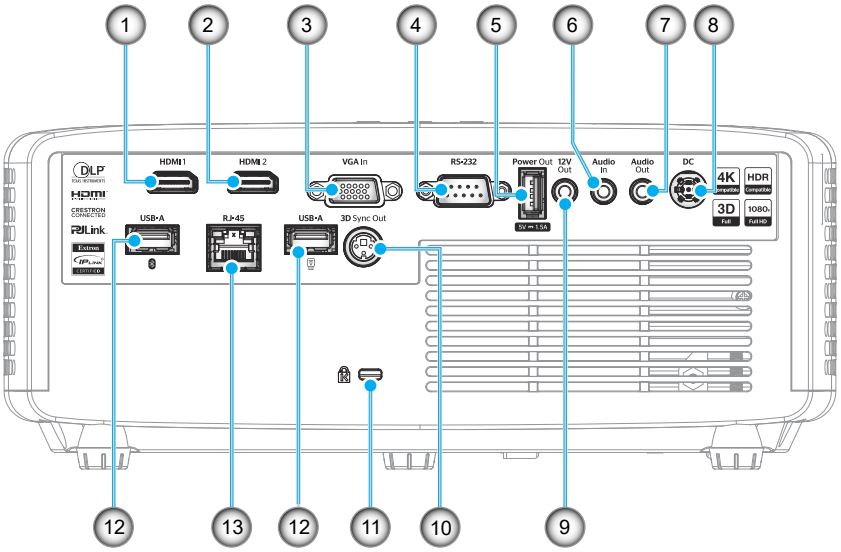

No	Item	No	Item
1.	HDMI IN 1 Connector	8.	DC Jack
2.	HDMI IN 2 Connector	9.	12V OUT Connector
3.	VGA IN Connector	10.	3D Sync OUT Connector
4.	RS-232 Connector	11.	Kensington™ Lock Port
5.	USB Power Out (5V⎓1.5A) Connector	12.	USB Type-A Connectors
6.	Audio IN Connector	13.	RJ-45 Connector
7.	Audio OUT Connector		

Note: *Available I/O ports differ by model.*

INTRODUCTION

Keypad

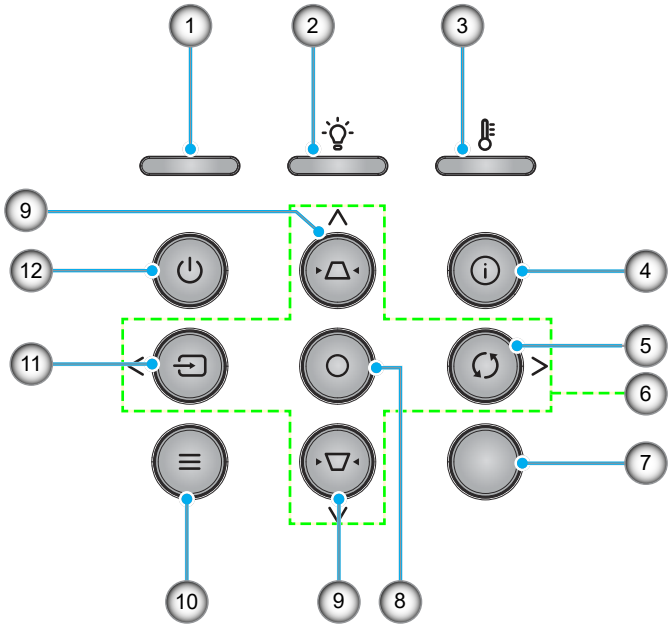

No	Item	No	Item
1.	Power LED	7.	IR Receiver
2.	Lamp LED	8.	Enter
3.	Temp LED	9.	Keystone Correction
4.	Information	10.	Menu
5.	Re-Sync	11.	Source
6.	Four Directional Select Keys	12.	Power

INTRODUCTION

Remote control

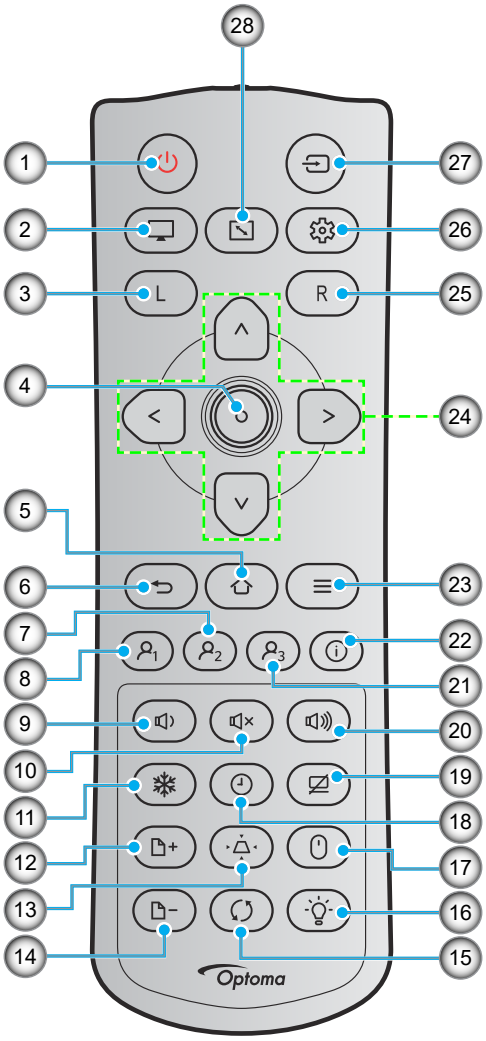

No	Item	No	Item
1.	Power	15.	Resync
2.	Display Mode	16.	Light Source Mode
3.	Mouse Left Click	17.	Mouse
4.	Enter	18.	Sleep Timer
5.	Home	19.	AV Mute
6.	Return	20.	Volume +
7.	User 2 (Assignable)	21.	User 3 (Assignable)
8.	User 1 (Assignable)	22.	Information
9.	Volume -	23.	Menu
10.	Mute	24.	Four Directional Select Keys
11.	Freeze	25.	Mouse Right Click
12.	Page Up	26.	Setup Menu
13.	Keystone	27.	Source
14.	Page Down	28.	Aspect Ratio

Note: *Some keys may have no function for models that do not support these features.*

INTRODUCTION

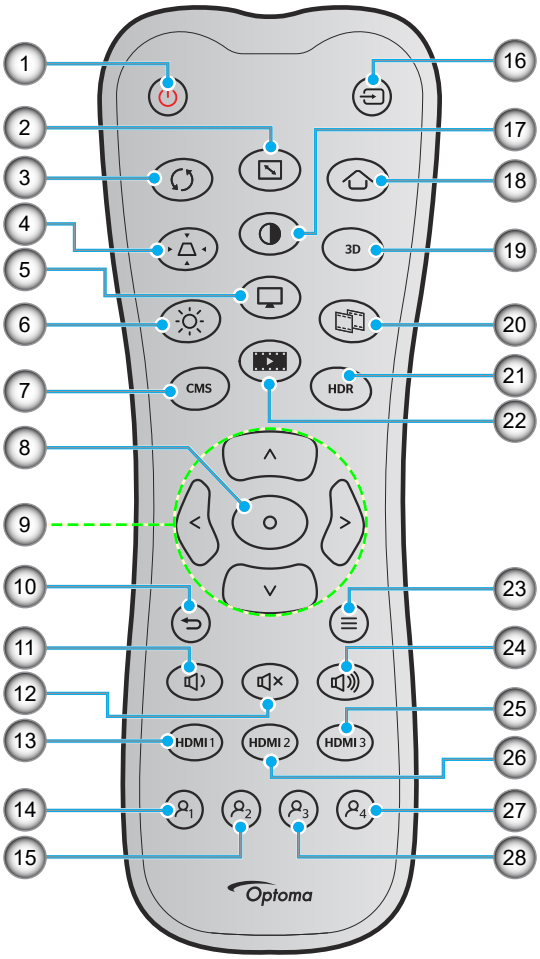

No	Item	No	Item
1.	Power On	15.	User2 (assignable)
2.	Aspect Ratio	16.	Source
3.	Re-sync	17.	Contrast
4.	Keystone	18.	Home (not supported)
5.	Mode	19.	3D Menu On / Off (not supported)
6.	Brightness	20.	Low Latency Mode
7.	CMS	21.	HDR
8.	Enter	22.	FILMMAKER MODE
9.	Four Directional Select Keys	23.	Menu
10.	Return	24.	Vol +
11.	Vol -	25.	HDMI3 (not supported)
12.	Mute	26.	HDMI2
13.	HDMI1	27.	User4 (assignable)
14.	User1 (assignable)	28.	User3 (assignable)

Note:

- *The actual remote control may vary depending on the region.*
- *Some keys may have no function for models that do not support these features.*

SETUP AND INSTALLATION

Installing the projector

Your projector is designed to be installed in one of four possible positions.

Your room layout or personal preference will dictate which installation location you select. Take into consideration the size and position of your screen, the location of a suitable power outlet, as well as the location and distance between the projector and the rest of your equipment.

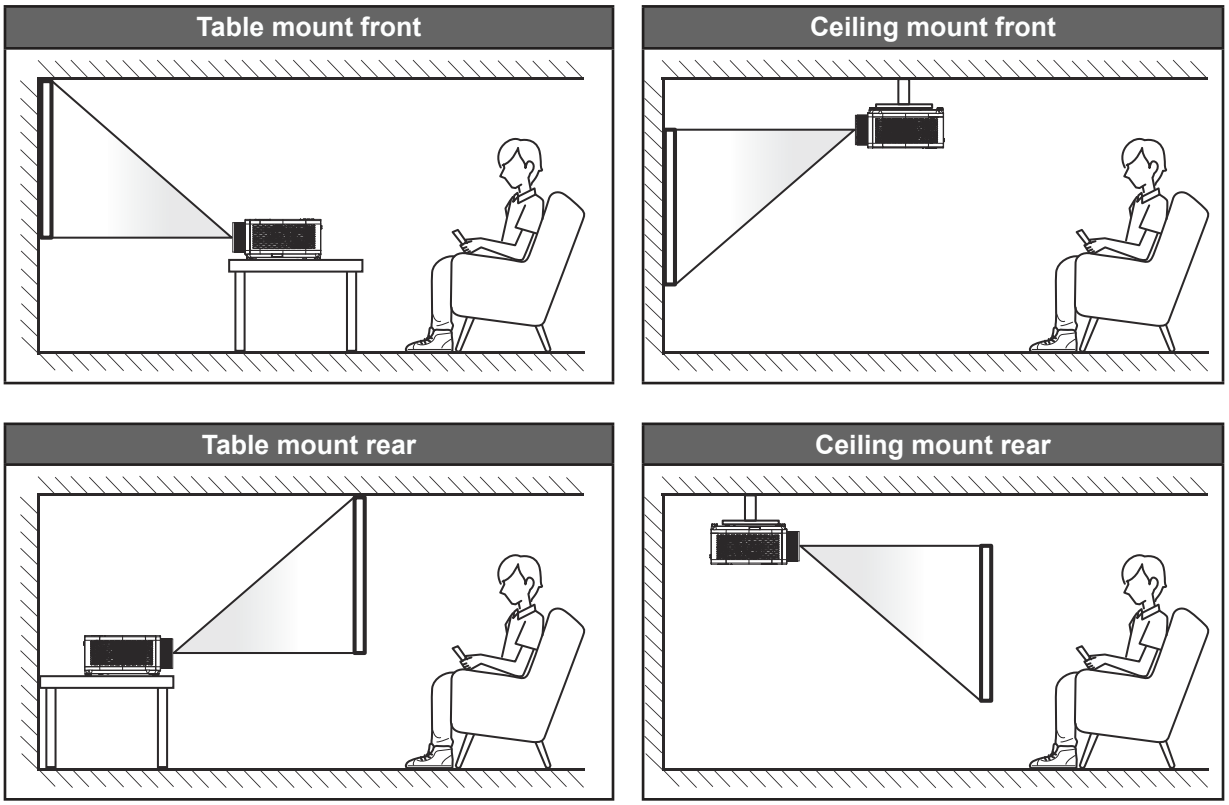

Projector should be placed flat on a surface and 90 degrees / perpendicular to the screen.

- How to determine projector location for a given screen size, please refer to distance table on pages *66~68*.
- How to determine screen size for a given distance, please refer to distance table on pages *66~68*.

Note: *The further away the projector is placed from the screen the projected image size increases and vertical offset also increases proportionally.*

SETUP AND INSTALLATION

Projector installation notice

- 360° free orientation operation

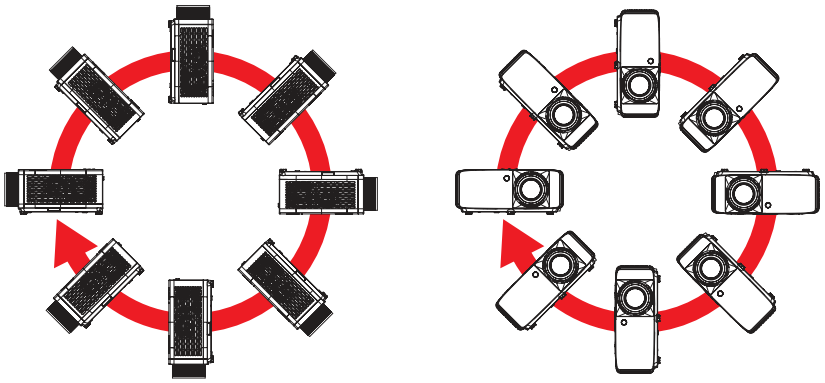

- Allow at least 30 cm clearance around the exhaust vent.

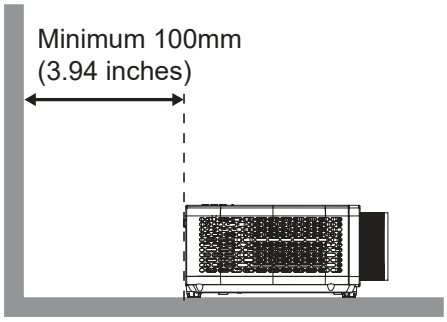

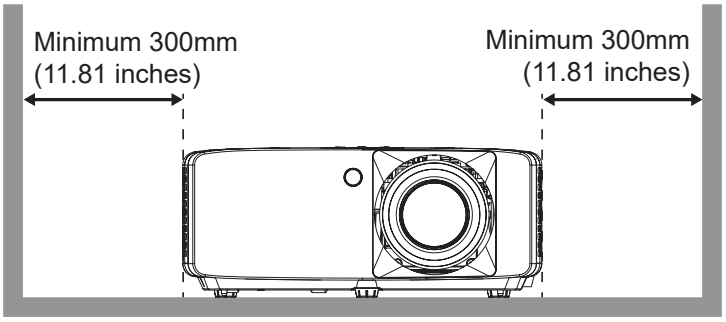

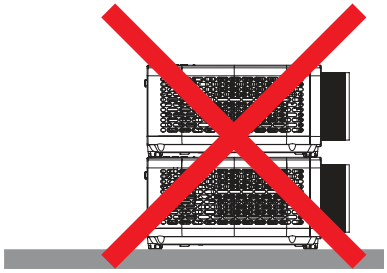

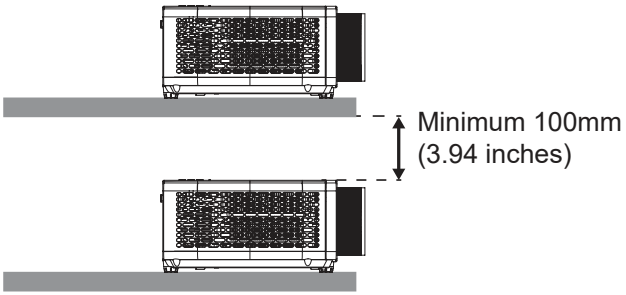

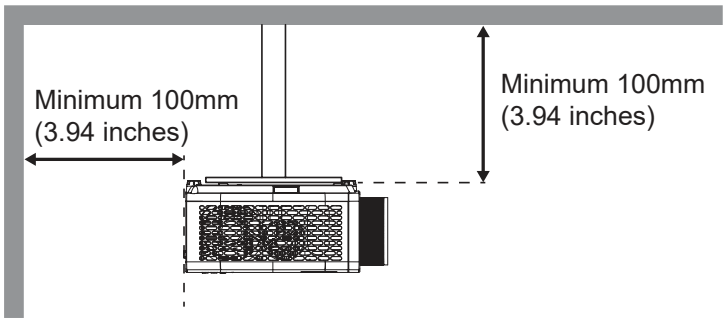

- Ensure that the intake vents do not recycle hot air from the exhaust vent.
- When operating the projector in an enclosed space, ensure that the surrounding air temperature within the enclosure does not exceed operation temperature while the projector is running, and the air intake and exhaust vents are unobstructed.
- All enclosures should pass a certified thermal evaluation to ensure that the projector does not recycle exhaust air, as this may cause the device to shutdown even if the enclosure temperature is with the acceptable operation temperature range.

SETUP AND INSTALLATION

Connecting sources to the projector

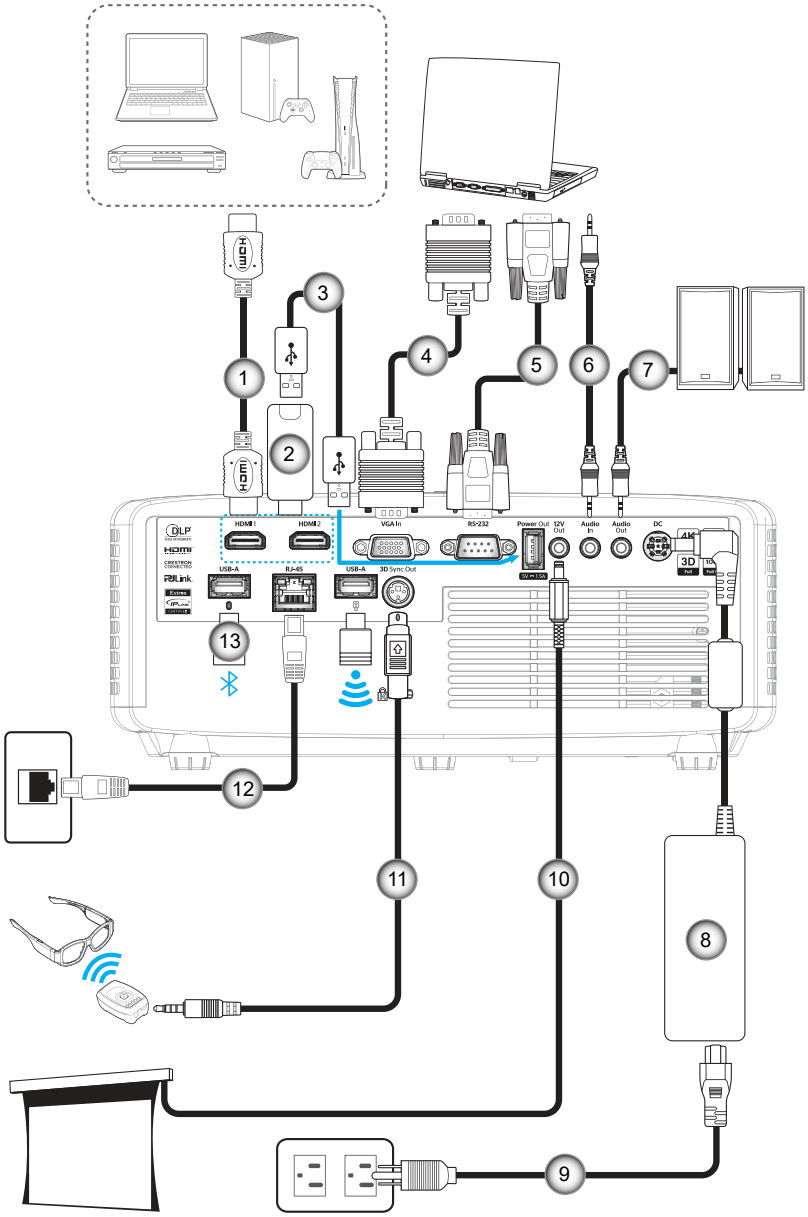

No	Item	No	Item
1.	HDMI Cable	8.	Power Adapter
2.	HDMI Dongle	9.	Power Cable
3.	USB Power Cable	10.	12V DC Jack
4.	VGA Cable	11.	3D Emitter Cable
5.	RS232 Cable	12.	RJ-45 Cable
6.	Audio Cable	13.	USB Disk Drive / Wi-Fi Dongle (optional)
7.	Speaker Cable		

Note:

- *The standard configuration is a 1.8m cable.*
- *Available I/O ports differ by model.*

SETUP AND INSTALLATION

Adjusting the projector image

Image height

The projector is equipped with elevator feet for adjusting the image height.

1. Locate the adjustable foot you wish to adjust on the underside of the projector.
2. Rotate the adjustable foot clockwise or counterclockwise to raise or lower the projector.

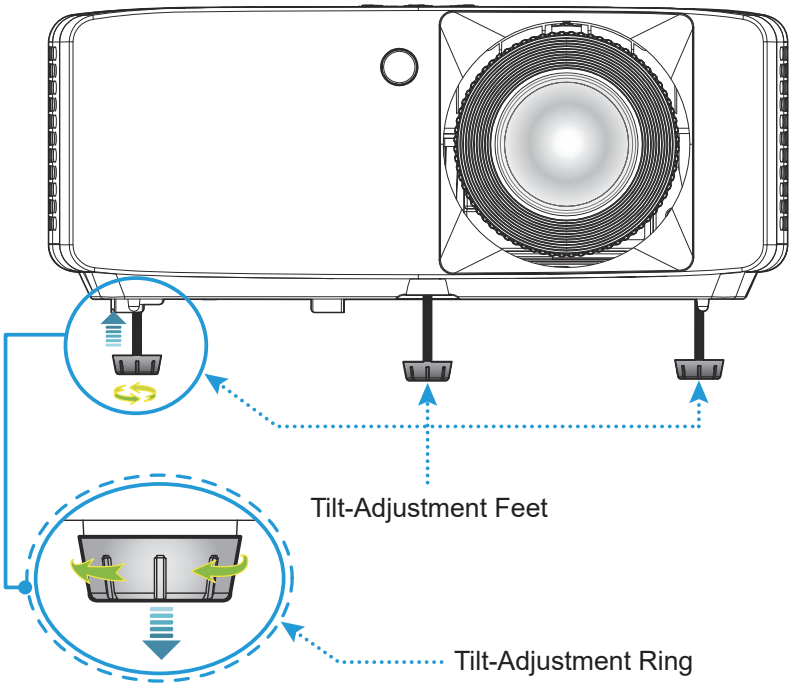

SETUP AND INSTALLATION

Zoom and focus

- To adjust the image size, turn the zoom lever clockwise or counterclockwise to increase or decrease the projected image size.
- To adjust the focus, turn the focus ring clockwise or counterclockwise until the image is sharp and legible.

Standard model

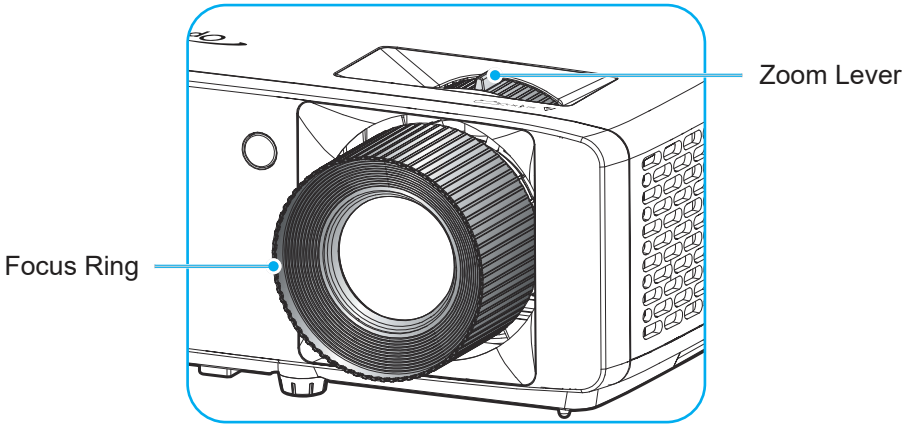

Short-Throw model

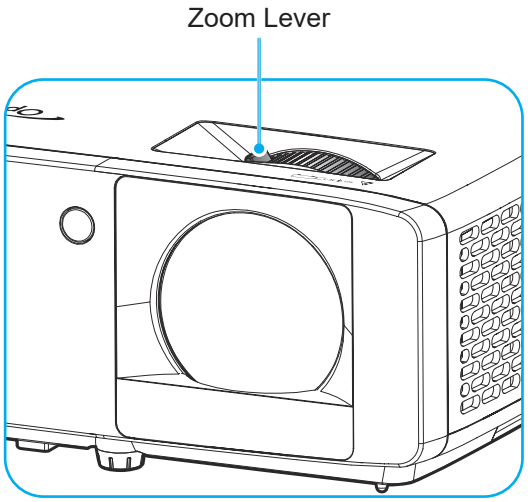

SETUP AND INSTALLATION

Remote setup

Installing / replacing the batteries

Two AAA size batteries are supplied for the remote control.

1. Remove the battery cover on the back of the remote control.
2. Insert AAA batteries in the battery compartment as illustrated.
3. Replace back cover on remote control.

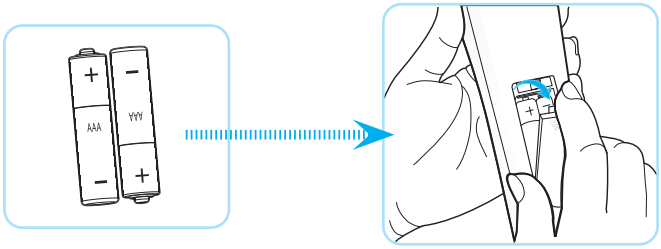

Note: *Replace only with the same or equivalent type batteries.*

CAUTION: To ensure safe operation, please observe the following precautions:

- Replacement of a battery with an incorrect type that can defeat a safeguard (AAA size battery type).
- Disposal of a battery into a fire, hot oven, mechanically crushing or cutting of a battery, may result in an explosion.
- Leaving a battery in an extremely high temperature surrounding environment that can result in an explosion or the leakage of flammable liquid or gas.
- A battery subjected to extremely low air pressure that may result in an explosion or the leakage of flammable liquid or gas.
- Do not mix old and new batteries. Mixing old and new batteries can shorten the life of new batteries or cause a chemical leak in the old batteries.
- Remove batteries as soon as they are depleted. Chemicals that leak from a battery which comes into contact with your skin can cause a rash. If you find any chemical leakage, wipe thoroughly with a cloth.
- The batteries supplied with this product may have a shorter life expectancy due to storage conditions.
- If you are not using the remote control for an extended period of time, please remove the batteries to reduce risk of chemical leak.

SETUP AND INSTALLATION

Effective range

Infra-Red (IR) remote control sensor is located on the top and front sides of the projector. Ensure that the remote control is held at an angle 30 degrees perpendicular to the projector's IR remote control sensor to ensure correct functionality. The distance between the remote control and the sensor should not be longer than 6 meters (19.7 feet).

- Make sure that there are no obstacles between the remote control and the IR sensor on the projector that might obstruct the infra-red beam.
- Make sure the IR transmitter of the remote control is not being directly shined on by sunlight or fluorescent lamps.
- Please keep the remote controller away from fluorescent lamps for over 2 m or the remote controller may malfunction.
- If the remote control is close to Inverter-Type fluorescent lamps, it might become ineffective from time to time.
- If the remote control and the projector are within a very short distance of one another, the remote control might become ineffective.

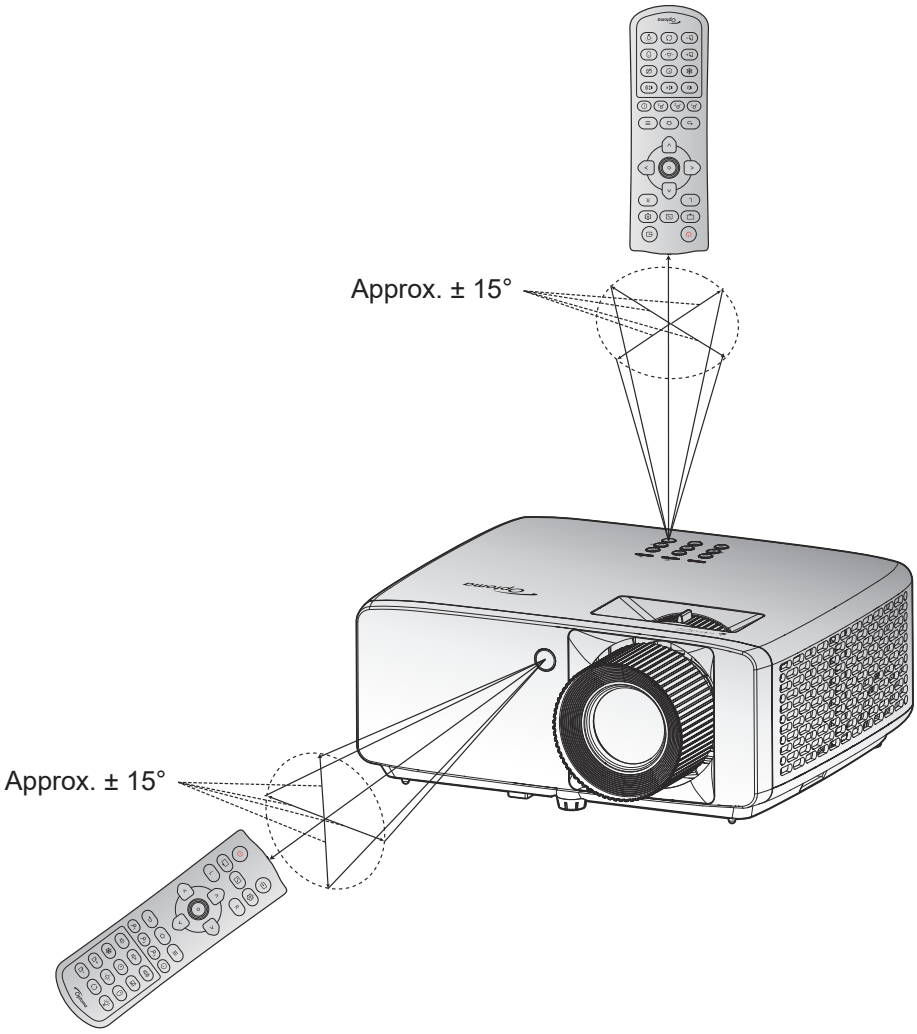

USING THE PROJECTOR

Powering on / off the projector

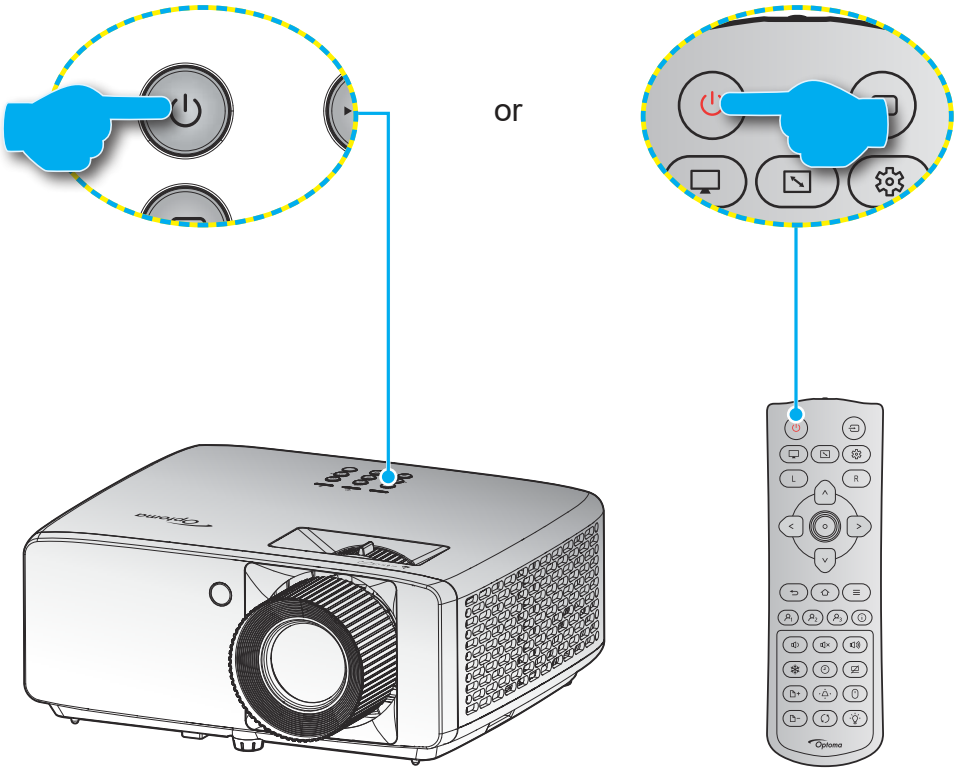

Powering on

1. Securely connect the power lead and signal/source cable. When connected, the Power LED will turn red.
2. Turn on the projector by pressing the ⏻ button on the projector keypad or the ⏻ button on the remote control.
3. A start up screen will display in approximately 10 seconds and the Power LED will be flashing blue.

Note: *The first time the projector is turned on, you will be prompted to select the preferred language, projection orientation, and other settings.*

Powering off

1. Turn off the projector by pressing the ⏻ button on the projector keypad or the ⏻ button on the remote control.
2. The following message will be displayed:

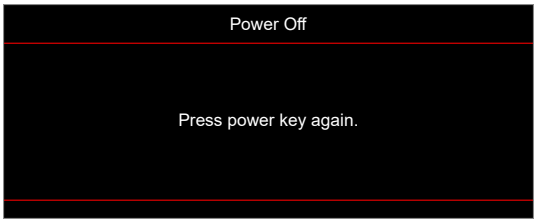

3. Press the ⏻/⏻ button again to confirm, otherwise the message will disappear after 15 seconds. When you press the ⏻/⏻ button for the second time, the projector will shut down.
4. The cooling fans will continue to operate for about 10 seconds for the cooling cycle and the Power LED will flash blue. When the Power LED turns solid red, this indicates the projector has entered standby mode. If you wish to turn the projector back on, you must wait until the cooling cycle has finished and the projector has entered standby mode. When the projector is in standby mode, simply press the ⏻/⏻ button again to turn on the projector.
5. Disconnect the power lead from the electrical outlet and the projector.

Note: *It is not recommended that the projector be turned on immediately, right after a power off procedure.*

USING THE PROJECTOR

Selecting an input source

Turn on the connected source that you want to display on the screen, such as computer, notebook, video player, etc. The projector will automatically detect the source. If multiple sources are connected, press the button on the projector keypad or remote control to select the desired input.

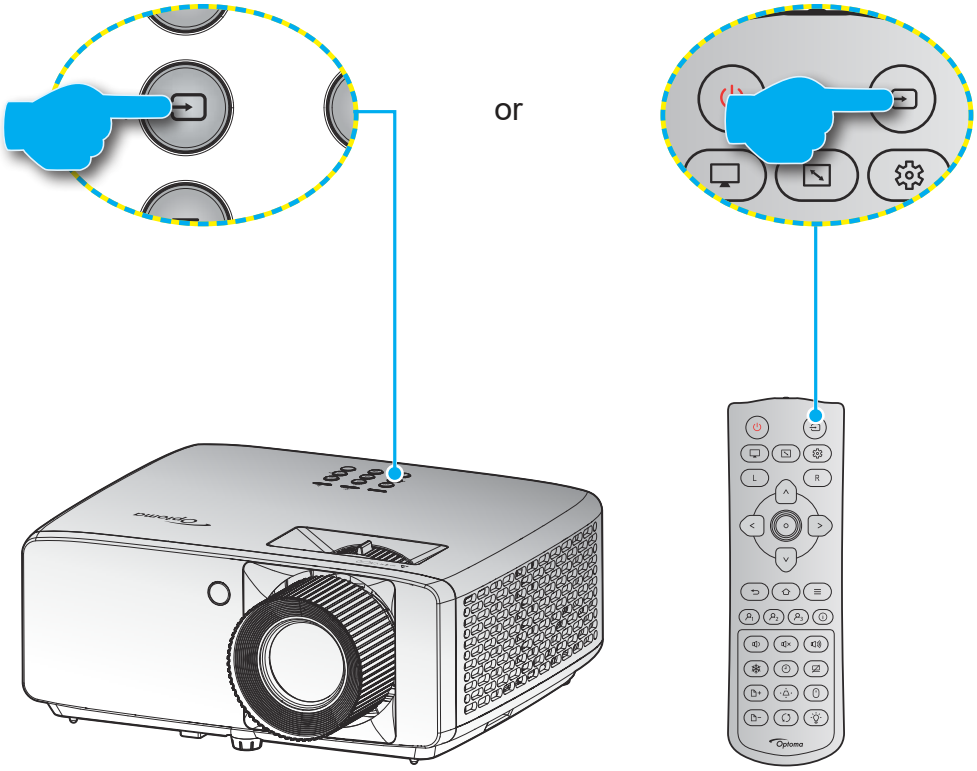

USING THE PROJECTOR

Menu navigation and features

The projector has multilingual on-screen display menus that allow you to make image adjustments and change a variety of settings. The projector will automatically detect the source.

1. To open the OSD menu, press the ☰ button on the projector keypad or remote control.
2. When OSD is displayed, use ∧/∨ keys to select any item in the main menu. While making a selection on a particular page, press the ○ button on the projector keypad or remote control to enter sub menu.
3. Use </> keys to select the desired item in the sub menu and then press the ○ button to view further settings. Adjust the settings by using ∧/∨/</> keys.
4. Select the next item to be adjusted in the sub menu and adjust as described above.
5. Press the ○ button to confirm, and the screen will return to the main menu.
6. To exit, press the ☰ button again. The OSD menu will close and the projector will automatically save the new settings.

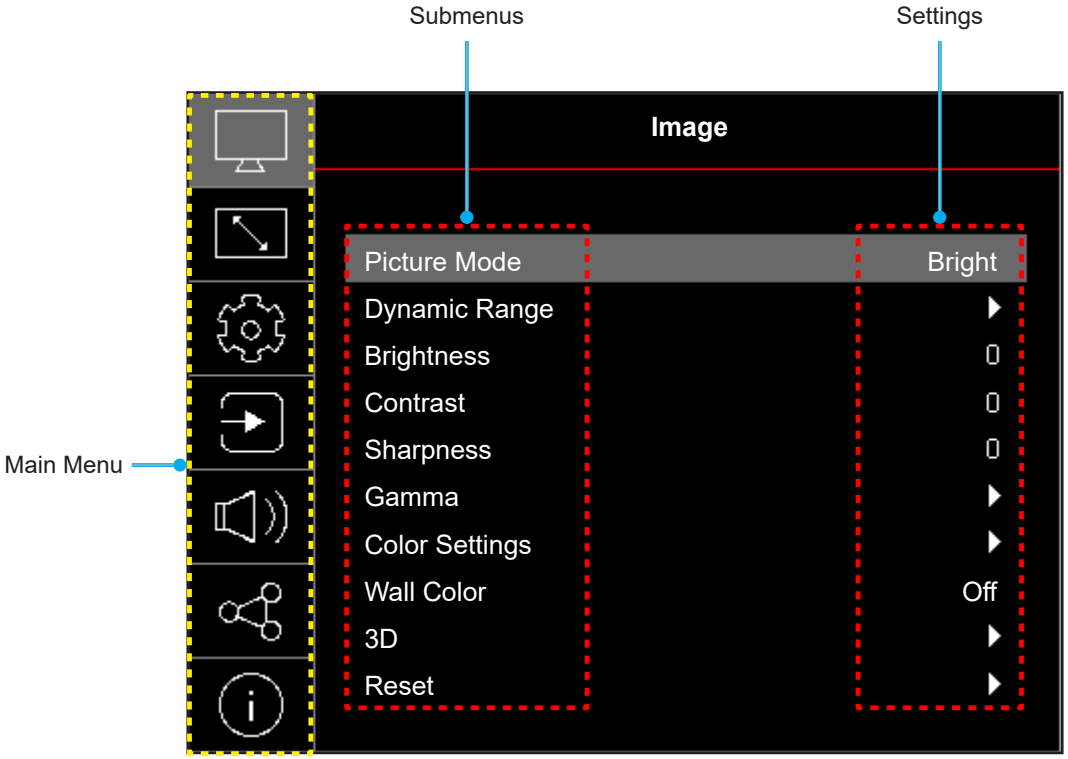

USING THE PROJECTOR

OSD Menu tree

Note: *The OSD menu tree items and features are subject to models and region. Optoma reserves the right to add or remove items to improve product performance without notice.*

Main Menu	Sub Menu	Sub Menu 2	Sub Menu 3	Sub Menu 4	Values
Image	Picture Mode				Vivid
					Bright
					HDR
					HLG
					Cinema
					Game
					Sport
					Reference
					DICOM SIM.
					3D
					Golf SIM.
					ISF Day
					ISF Night
					ISF 3D
	Dynamic Range	HDR / HLG			Off
					Auto
	Brightness				-50 ~ 50
	Contrast				-50 ~ 50
	Sharpness				1 ~ 15
	Gamma				Film
					Graphics
					1.8
					2.0
					2.2
					2.4
	Color Settings	Color			-50 ~ 50
		Tint			-50 ~ 50
		BrilliantColor™			1 ~ 10
		Color Temperature			Warm
					Standard
					Cool
					Cold
		CMS	Color		White / Red / Green / Blue / Cyan / Magenta / Yellow
			Hue		-50 ~ 50
			Saturation		-50 ~ 50
			Gain		-50 ~ 50
			Reset		No
					Yes
			Exit		

USING THE PROJECTOR

Main Menu	Sub Menu	Sub Menu 2	Sub Menu 3	Sub Menu 4	Values
Image	Color Settings	Color Space			Auto
					RGB(0~255)
					RGB(16~235)
					RGB
					YUV
		Dynamic Black			Off
					On
	Wall Color				Off
					Blackboard
					Light Yellow
					Light Green
					Light Blue
					Pink
					Gray
	3D	3D Mode			Off
					On
		3D Tech			DLP-Link
					3D Sync
		3D Format			Auto
					SBS
					Top and Bottom
					Frame Sequential
		3D Sync Invert			Off
					On
		Reset			Cancel
					OK
	Reset				No
					Yes
Display	Projection Orientation				Front
					Rear
					Ceiling-Top
					Rear-Top
	Light Source Mode				Eco.
					Constant Power: 100% / 95% / 90% / 85% / 80% / 75% / 70% / 65% / 60% / 55% / 50%
	Low Latency Mode				Off
					On
	Screen Type				4:3 / 16:9 / 16:10 / 1:1 / Custom
	Aspect Ratio				4:3
					16:9
					16:10
					Native
					Auto
					Full

USING THE PROJECTOR

Main Menu	Sub Menu	Sub Menu 2	Sub Menu 3	Sub Menu 4	Values
Display	Geometric Correction	V Keystone			-30 ~ 30
		H Keystone			-30 ~ 30
		Four Corner Adjustment			
		Reset			
	Digital Zoom	Zoom			-5 ~ 25
	Image Shift	H			-100 ~ 100
		V			-100 ~ 100
	Digital Lens Shift	H			
		V			
	Signal	Automatic			Off
					On
		Frequency			-10 ~ 10
		Phase			0 ~ 31
		H.Position			-5 ~ 5
		V.Position			-5 ~ 4
	Reset				No
					Yes
Setup	Test Pattern				Off
					Green Grid
					Magenta Grid
					White Grid
					White
	Language				English
					عـربي
					Čeština
					Dansk
					Nederlands
					فارســی
					Suomi
					Français
					Deutsch
					ελληνικά
					Magyar
					Bahasa Indonesia
					Italiano
					日本語
					한국어
					Norsk
					Polski
					Português
					Română
					Русский

USING THE PROJECTOR

Main Menu	Sub Menu	Sub Menu 2	Sub Menu 3	Sub Menu 4	Values
Setup	Language				簡体中文
					Español
					Svenska
					ไทย
					繁體中文
					Türkçe
					Tiếng Việt
	Menu Settings	Menu Location			(icon) Top left
					(icon) Top right
					(icon) Center
					(icon) Bottom left
					(icon) Bottom right
		Menu Timer			Off
					5s
					10s
					20s
					30s
		Information Hide			Off
					On
	High Altitude				Off
					On
	Power Settings	Direct Power On			Off
					On
		Signal Power On			Off
					On
		Auto Power Off (min.)			0 ~ 180 (1 min increments)
		Sleep Timer (min.)			0 ~ 990 (30 min increments)
					No / Yes
		Power Mode (Standby)			Eco
					Active
					Active (20 mins)
		12V Trigger			Off
					On
	Security	Security			Off
					On
		Security Timer	Month		
			Day		
			Hour		
		Change Password			
	Startup Logo				Default
					User
					Neutral

USING THE PROJECTOR

Main Menu	Sub Menu	Sub Menu 2	Sub Menu 3	Sub Menu 4	Values
Setup	Background Color				None
					Blue
					Red
					Green
					Gray
					Logo
	System Update	Auto			Off
					On
		Update			Off / On(Dialog box)
	Reset	Reset OSD			Cancel
					OK
		Reset to Default			Cancel
					OK
Input	Auto Source				Off
					On
	Auto Input Switch				Off
					On
	HDMI CEC Settings	HDMI Link			Off
					On
		Inclusive of TV			No
					Yes
		Power On Link			Mutual
					PJ → Device
					Device → PJ
		Power Off Link			Off
					On
	Wireless Display	Display Type			Direct Cast
					P2P (WiFi Direct)
		Dongle Pairing			
	Quick Search				Off
					On
	Reset				No
					Yes
Audio	Volume				0 ~ 100
	Mute				Off
					On
	Reset				No
					Yes

Main Menu	Sub Menu	Sub Menu 2	Sub Menu 3	Sub Menu 4	Values
Control	Device ID				0~99
	Remote Settings	IR Function			Off
					On
		User 1			HDMI 1/HDMI 2/Test Pattern/ Brightness/Contrast/Sleep Timer/ Color Matching/Color Temp/ Gamma/ Projection/Light Source Settings/Zoom/Freeze/ [Depends on model]
		User 2			HDMI 1/HDMI 2/Test Pattern/ Brightness/Contrast/Sleep Timer/ Color Matching/Color Temp/ Gamma/ Projection/Light Source Settings/Zoom/Freeze/ [Depends on model]
		User 3			HDMI 1/HDMI 2/Test Pattern/ Brightness/Contrast/Sleep Timer/ Color Matching/Color Temp/ Gamma/ Projection/Light Source Settings/Zoom/Freeze/ [Depends on model]
	Keypad Settings	Keypad Lock			Off
					On
	LAN	Network Status			(read only)
		MAC Address			(read only)
		DHCP			Off
					On
		IP Address			192.168.0.100
		Subnet Mask			255.255.255.0
		Gateway			192.168.0.254
		DNS 1			192.168.0.51
		DNS 2			0.0.0.0
		IPv6 Settings	IPv6		Off
					On
			Auto Configuration		On
					Manual
			Temporary Address		Off
					On
			Link Local		(read only)
			IP Address		fd00:0000:0000:0000: 0000:0000:0000:0001
			Prefix Length		0~128
			Gateway		fd00:0000:0000:0000: 0000:0000:0000:0001
			DNS 1		0000:0000:0000:0000: 0000:0000:0000:0000
			DNS 2		0000:0000:0000:0000: 0000:0000:0000:0000

Main Menu	Sub Menu	Sub Menu 2	Sub Menu 3	Sub Menu 4	Values
Control	LAN	Reset			Cancel
					Yes
	Control	Crestron			On
					Off
		Extron			On
					Off
		PJ Link			On
					Off
		AMX Device Discovery			On
					Off
		Telnet			On
					Off
		HTTPS			On
					Off
	Reset				No
					Yes
Information	Regulatory				
	Serial Number				
	Source				
	Color Info.				
	Light Source Hours				
	Picture Mode				
	Device ID				00 ~ 99
	Light Source Mode				
	OMS				Paired/ Unpaired
	FW Version	DDP			Cxx
		MCU			Mxx
		LAN			Lxx

USING THE PROJECTOR

Image menu

Image picture mode menu

There are several predefined display modes that you can choose from to suit your viewing preference. Each mode has been fine-tuned by our expert colour team to ensure superior colour performance for wide range of content.

- **Vivid**: In this mode, the color saturation and brightness are well-balanced. Choose this mode for playing games.
- **Bright**: This mode is suitable for environments where extra-high brightness is required, such as using the projector in well-lit rooms.
- **HDR / HLG**: Decodes and displays High Dynamic Range (HDR) / Hybrid Log Gamma (HLG) content for the deepest blacks, brightest whites, and vivid cinematic color using REC.2020 color gamut. This mode will be automatically enabled if HDR/HLG is set to Auto (and HDR/HLG Content is sent to projector – 4K UHD Blu-ray, 1080p/4K UHD HDR/HLG Games, 4K UHD Streaming Video). While HDR/HLG mode is active, other display modes (Cinema, Reference, etc.) cannot be selected as HDR/HLG delivers color that is highly accurate, exceeding the color performance of the other display modes.

  Note: *This option is only available for 1080p model.*
- **Cinema**: Provides the best balance of detail and colors for watching movies.
- **Game**: Optimises your projector for maximum contrast and vivid colours allowing you to see shadow detail when playing video games.
- **Sport**: Optimises your projector for watching sports playback or playing sports games.
- **Reference**: This mode reproduces colours as close as possible the image the way the movie director intended. Color, color temperature, brightness, contrast and gamma settings are all configured to Rec.709 color gamut. Select this mode for the most accurate colour reproduction when watching movies.
- **DICOM SIM.**: This mode has been created for viewing greyscale images, perfect for viewing X-rays and scans during medical training*.

  Note: **This projector is not suitable for use in medical diagnosis.*
- **3D**: Optimized settings for watching 3D content.

  Note: *To experience the 3D effect, you will need to have compatible DLP Link 3D glasses. See the 3D section for more information.*
- **Golf SIM.**: Golf Sim Mode enhances the colors and contrast to create a realistic golf course setting featuring brighter blue skies, darker shadows and realistic greens.
- **ISF Day**: Optimize the image with the ISF Day mode to be perfectly calibrated and high picture quality.
- **ISF Night**: Optimize the image with the ISF Night mode to be perfectly calibrated and high picture quality.
- **ISF 3D**: Optimize the image with the ISF 3D mode to be perfectly calibrated and high picture quality.

Image dynamic range menu

HDR / HLG

Configure the High Dynamic Range (HDR) / Hybrid Log Gamma(HLG) setting and its effect when displaying video from 4K Blu-ray players and streaming devices.

- **Off**: Turn off HDR/HLG Processing. When set to Off, the projector will NOT decode HDR/HLG content.
- **Auto**: Auto detect HDR/HLG signal.

Image brightness menu

Adjust the brightness of the image.

Image contrast menu

The contrast controls the degree of difference between the lightest and darkest parts of the picture.

Image sharpness menu

Adjust the sharpness of the image.

Image gamma menu

Set up gamma curve type. After the initial setup and fine tuning is completed, utilize the Gamma Adjustment steps to optimize your image output.

- **Film**: For home theater.
- **Graphics**: For PC / Photo source.
- **1.8 / 2.0 / 2.2 / 2.4**: For specific PC / Photo source.

Image color settings menu

Color

Adjust a video image from black and white to fully saturated color.

Tint

Adjust the color balance of red and green.

BrilliantColor™

This adjustable item utilizes a new color-processing algorithm and enhancements to enable higher brightness while providing true, more vibrant colors in picture.

Color Temperature

Select a color temperature from Warm, Standard, Cool, or Cold.

CMS

Select the following options:

- **Color**: Adjust the red, green, blue, cyan, yellow, magenta, and white level of the image.
- **Hue**: Adjust the color balance of red and green.
- **Saturation**: Adjust a video image from black and white to fully saturated color.
- **Gain**: Adjust the luminance of the selected color.
- **Reset**: Return the factory default settings for color adjustment.
- **Exit**: Return to the Color Settings menu interface.

Color Space

Select an appropriate color matrix type from the following: Auto, RGB(0-255), RGB(16-235), RGB, and YUV.

Dynamic Black

Use to automatically adjust the picture brightness in order to give optimum contrast performance.

Image wall color menu

Designed to adjust the colors of the projected image when projecting on to a wall without a screen. Each mode has been fine-tuned by our expert colour team to ensure superior color performance.

There are several predefined modes that you can choose from to suit the colour of your wall. Select between off, blackboard, light yellow, light green, light blue, pink, and gray.

Note: *For accurate color reproduction, we recommend using a screen.*

Image 3D menu

Note:

- *This projector is a 3D ready projector with DLP-Link 3D solution.*
- *Please make sure your 3D glasses are used for DLP-Link 3D before enjoying your video.*
- *This projector supports frame sequential (page-flip) 3D via HDMI1/HDMI2 ports.*
- *To enable 3D mode, the input frame rate should be set to 60Hz only, lower or higher frame rate is not supported.*
- *To reach the best performance, resolution 1920x1080 is recommended, please be noted that 4K (3840x2160) resolution is not supported in 3D mode.*

3D Mode

Use this option to disable or enable the 3D function.

- **Off**: Select “Off” to turn off 3D mode.
- **On**: Select “On” to turn on 3D mode.

3D Tech

Use this option to select 3D technology.

- **DLP-Link**: Select to use optimized settings for DLP 3D Glasses.
- **3D Sync**: Select to use optimized settings for IR, RF or polarized 3D Glasses.

3D Format

Use this option to select the appropriate 3D format content.

- **Auto**: When a 3D identification signal is detected, the 3D format is selected automatically.
- **SBS**: Display 3D signal in “Side-by-Side” format.
- **Top and Bottom**: Display 3D signal in “Top and Bottom” format.
- **Frame Sequential**: Display 3D signal in “Frame Sequential” format.

3D Sync Invert

Use this option to enable/disable the 3D sync invert function.

Reset

Return the factory default setting for 3D settings.

Image reset menu

Return the factory default settings for image settings.

USING THE PROJECTOR

Display menu

Display projection orientation menu

Select the preferred projection between front, rear, ceiling-top, and rear-top.

Display light source mode menu

Select a light source mode depending on the installation requirements.

Display low latency mode menu

Enable this feature to reduce response times (input latency) during gaming to 8.6ms (1080p@120Hz). All geometry settings (example: Keystone, Four Corners) will be disabled when Low Latency Mode is enabled. More information is provided below:

Note:

- *The input lag by signals is described in the following table:*
- *The values in the table can vary slightly.*

Source Timing	Low Latency Mode	Output Timing	Output Resolution	Input Lag
1080p60	On	1080p60Hz	1080p	17ms
1080p120	On	1080p120Hz	1080p	8.6ms
1080p240	On	1080p240Hz	1080p	4.4ms
4K60	On	4K60Hz	4K	16.9ms
1080p60	Off	1080p60Hz	1080p	33.8ms
1080p120	Off	1080p120Hz	1080p	17ms
1080p240	Off	1080p240Hz	1080p	8.6ms
4K60	Off	4K60Hz	4K	33.7ms

Display screen type menu

Select the screen type of the original image between the following options:

- **4:3**: Change the resolution of the original image to a 4:3 screen type.
- **16:9**: Change the resolution of the original image to a 16:9 screen type.
- **16:10**: Change the resolution of the original image to a 16:10 screen type.
- **1:1**: Change the resolution of the original image to a 1:1 screen type.
- **Custom**: Change the resolution of the original image to a user-defined screen ratio.

Note: *After changing the screen type, the aspect ratio will be disabled.*

Display aspect ratio menu

Select the aspect ratio of the displayed image between the following options:

- **4:3**: This format is for 4:3 input sources.
- **16:9**: This format is for 16:9 input sources, like HDTV and DVD enhanced for Wide screen TV.
- **16:10**: This format is for 16:10 input sources.
- **Native**: This format displays the original image without any scaling.
- **Auto**: Automatically selects the appropriate display format.
- **Full:** Fill the entire screen with the image.

1080p scaling table:

16:9 screen	480i/p	576i/p	1080i/p	720p	PC
4x3	Scale to 1440x1080.				
16x9	Scale to 1920x1080.				
Native mode	- 1:1 mapping centered. - No scaling will be made; the image is displayed with the resolution based on input source.				
Auto	- If auto format is selected, the screen type will automatically become 16:9 (1920x1080). - If source is 4:3, the screen type will be scaled to 1440 x1080. - If source is 16:9, the screen type will be scaled to 1920x1080. - If source is 16:10, the screen type will be scaled to 1920x1200 and cut 1920x1080 area to display.				

1080p auto mapping rule:

Auto	Input resolution		Auto/Scale	
	H-resolution	V-resolution	1920	1080
4:3	640	480	1440	1080
	800	600	1440	1080
	1024	768	1440	1080
	1280	1024	1440	1080
	1400	1050	1440	1080
	1600	1200	1440	1080
Wide Laptop	1280	720	1920	1080
	1280	768	1800	1080
	1280	800	1728	1080
SDTV	720	576	1350	1080
	720	480	1620	1080
HDTV	1280	720	1920	1080
	1920	1080	1920	1080

Display geometric correction menu

V Keystone

Adjust image distortion vertically and make a squarer image. Vertical keystone is used to correct a keystoned image shape in which the top and bottom are slanted to one of the sides. This is intended when for use with vertically on-axis applications.

H Keystone

Adjust image distortion horizontally and make a squarer image. Horizontal keystone is used to correct a keystoned image shape in which the left and right borders of the image are unequal in length. This is intended for use with horizontally on-axis applications.

Four Corner Adjustment

This setting allows the projected image to be adjusted from each corner to make a square image when the projection surface is not level.

Reset

Return the factory default setting for geometric correction settings.

Display digital zoom menu

Use to reduce or magnify an image on the projection screen. Digital Zoom is not the same as optical zoom and an result in degradation of image quality.

Note: *Zoom settings are retained on power cycle of the projector.*

Display image shift menu

Adjust the projected image position horizontally (H) or vertically (V).

Display digital lens shift menu

Adjust the projected image position horizontally (H) or vertically (V) without moving it beyond the edges of the screen.

Display signal menu

Automatic

Configure automatically the signal (the frequency and phase items are grayed out). If automatic is disabled, the frequency and phase items will appear for tuning and saving the settings.

Frequency

Change the display data frequency to match the frequency of your computer's graphic card. Use this function only if the image appears to flicker vertically.

Phase

Synchronize the signal timing of the display with the graphic card. If the image appears to be unstable or flickers, use this function to correct it.

H.Position

Adjust the horizontal positioning of the image.

V.Position

Adjust the vertical positioning of the image.

Note: *This menu is only available if the input source is VGA.*

Display reset menu

Return the factory default settings for display settings.

USING THE PROJECTOR

Setup menu

Setup test pattern menu

Select the test pattern from green grid, magenta grid, white grid, white, or disable this function (off).

Setup language menu

Select the multilingual OSD menu.

Setup menu settings menu

Menu Location

Select the menu location on the display screen.

Menu Timer

Set the duration where the OSD menu stays visible on the screen.

Information Hide

Enable this function to hide the information message.

Setup high altitude menu

When “On” is selected, the fans will spin faster. This feature is useful in high altitude areas where the air is thin.

Setup power settings menu

Direct Power On

Choose “On” to activate Direct Power mode. The projector will automatically power on when AC power is supplied, without pressing the “Power” key on the projector keypad or on the remote control.

Signal Power On

Choose “On” to activate Signal Power mode. The projector will automatically power on when a signal is detected, without pressing the “Power” key on the projector Keypad or on the remote control.

Note:

- *If the “Signal Power On” option is turned “On”, the power consumption of the projector in standby mode will be over 3W.*
- *This function is applicable with HDMI source.*

Auto Power Off (min.)

Sets the countdown timer interval. The countdown timer will start, when there is no signal being sent to the projector. The projector will automatically power off when the countdown has finished (in minutes).

Sleep Timer (min.)

Sets the countdown timer interval. The countdown timer will start, with or without a signal being sent to the projector. The projector will automatically power off when the countdown has finished (in minutes).

Note: *The Sleep Timer is reset every time when the projector is powered off.*

Power Mode (Standby)

Set the power mode setting.

- **Eco:** Choose “Eco.” to save power dissipation further < 0.5W.
- **Active:** Choose “Active” to return to normal standby.
- **Active (20 mins):** Choose “Active (20 mins)” to let the power will decrease to less than 0.5W after 20 minutes.

12V Trigger

Use this function to enable or disable the trigger.

Note: *3.5mm mini jack that outputs 12V 500mA (max.) for relay system control.*

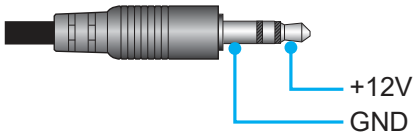

- **On**: Choose “On” to enable the trigger.
- **Off**: Choose “Off” to disable the trigger.

Setup security menu

Security

Enable this function to prompt for a password before using the projector.

- **On:** Choose “On” to use security verification when the turning on the projector.
- **Off:** Choose “Off” to be able to switch on the projector without password verification.

Security Timer

Can be select the time (Month/Day/Hour) function to set the number of hours the projector can be used. Once this time has elapsed you will be requested to enter your password again.

Change Password

Use to set or modify the password that is prompted when turning the projector on.

Setup startup logo menu

Use this function to set the desired startup screen. If changes are made, they will take effect the next time the projector is powered on.

- **Default:** The default startup screen.
- **User:** Logo capture tool required.

  Note: *Please visit the website to download the logo capture tool.*
  The supported file format: png/bmp/jpg.
- **Neutral:** Logo is not displayed on startup screen.

Setup background color menu

Use this function to display a blue, red, green, gray color, none, or logo screen when no signal is available.

Note: *If the background color is set to “None”, then the background color is black.*

Setup system update menu

Auto

The system will look for updates automatically every time the projector is connected to the Internet (OTA).

Update

Manually update the system firmware.

Setup reset menu

Reset OSD

Return the factory default settings for OSD menu settings.

Reset to Default

Return the factory default settings for all settings.

USING THE PROJECTOR

Input menu

Input auto source menu

Choose this option to let the projector automatically find an available input source.

Input auto input switch menu

When HDMI input signal is detected, the projector will automatically switch the input source.

Input HDMI CEC settings menu

Note: *When you connect HDMI CEC-compatible devices to the projector with HDMI cables, you can control them on the same power on or power off status using the HDMI Link control feature in the projector's OSD. This lets one device or multiple devices in a group power on or power off via HDMI Link Feature in a typical configuration, your DVD player may be connected to the projector through an amplifier or home theater system.*

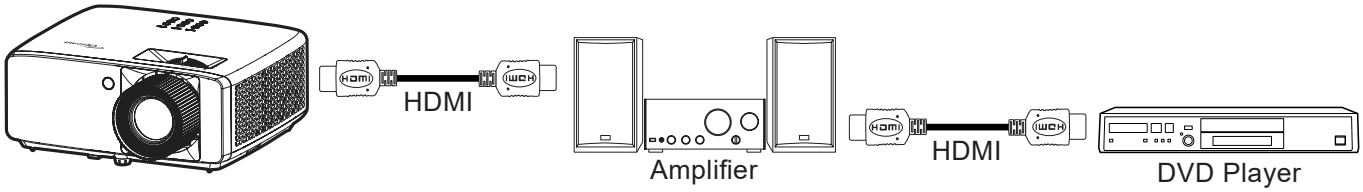

HDMI Link

Enable/disable the HDMI Link function.

Inclusive of TV

If the settings is set to "Yes" then the power on and power off link options are available.

Power On Link

CEC power on command.

- **Mutual:** Both projector and CEC device will be turned on simultaneously.
- **PJ → Device:** The CEC device will be turned on only after the projector is switched on.
- **Device → PJ:** The projector will be switched on only after the CEC device is turned on.

Power Off Link

Enable this function to let both HDMI Link and projector to be automatically turned off at the same time.

Input wireless display menu

Note: *This feature is only available on specific projector models.*

Display Type

Select “Direct Cast” or “P2P (WiFi Direct)” and follow the instructions below:

Connecting the Wireless Dongle

The projector is equipped with a **WIRELESS DONGLE** port for the Wireless Dongle (EZC-5201BS) which supports wireless projection between the projector and the following systems: iOS, macOS, Android, Windows, and ChromeOS.

After inserting the WiFi dongle into the **WIRELESS DONGLE** port, select “Wireless Display” from the input source selection bar. You can follow the on-screen instructions to enable wireless projection.

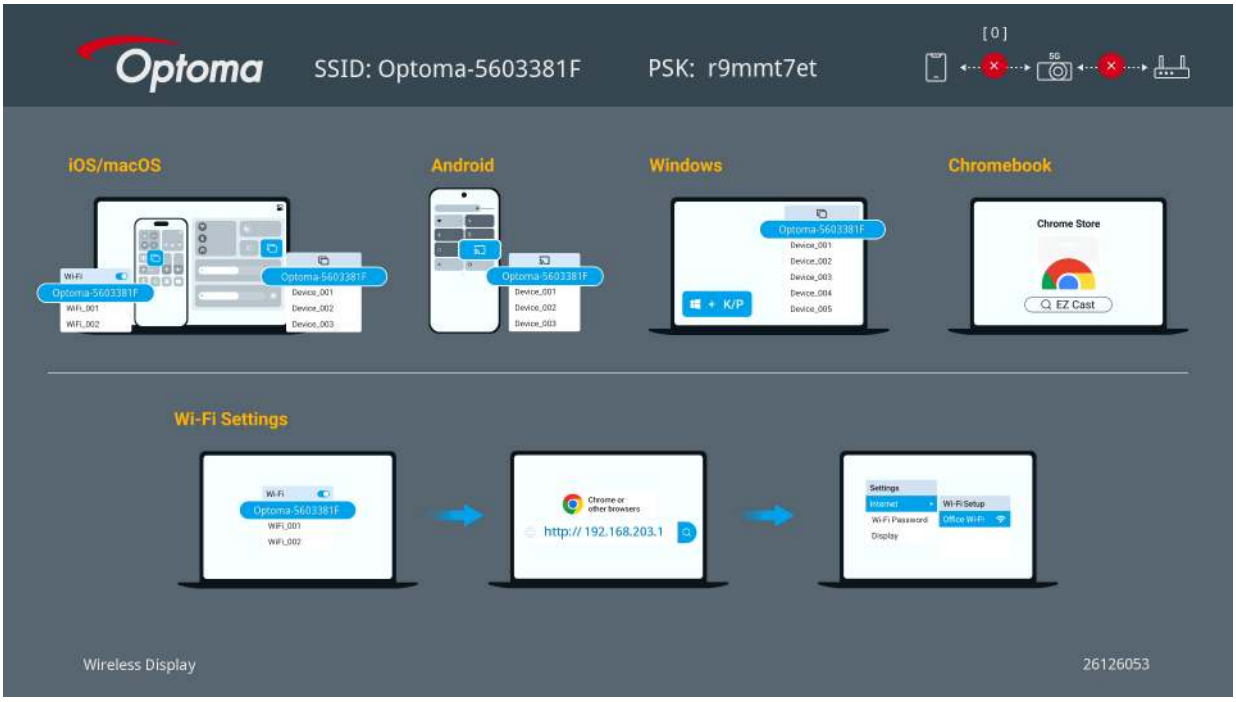

Performing wireless projection

For different devices, follow the steps below.

- **For iOS/ macOS devices**
  1. Select the WiFi network that the projector joined in the WiFi settings on your device.
  2. After opening control center, press screen mirroring and choose the projector (**Optoma-xxxxxxxx**) to start projection.
- **For Android devices**

  After opening the Quick settings panel, press the Screen Mirroring icon and choose the projector (**Optoma-xxxxxxxx**).
- **For Windows OS devices**

  Press the Windows + P / K and choose the projector (**Optoma-xxxxxxxx**).

Connecting the projector to the Internet

1. Select the WiFi SSID (**Optoma-xxxxxxxx**) of the projector in the WiFi settings on your device.
2. Enter the password from the projected image.
3. Open your web browser and go to the address of the projector (192.168.203.1).
4. Select a WiFi network that you want to join.
5. Enter the password if asked.

Dongle Pairing

Choose this option to pair the wireless transmitter dongle.

Projector's wireless setting

Launch the device's web browser and enter the projector's wireless IP address to open the setting page for the projector.

Internet Setup

Projector's wireless client setting, user could select preferred SSID.

Device Name

Default is the same as the SSID/ID; User could modify to preferred name.

PSK

Supports 0~9 and a~z, user could modify it.

Language

Default: Auto (depends on user's device); user could change to preferred setting page language.

Upgrade

Please make sure both projector and user's device are connected to the same Wi-Fi router. Please type projector's wireless IP address in web browser. It will auto-reboot when the upgrade is finished.

Input quick search menu

Choose whether to search for signals at a faster speed.

- **On:** Choose "On" to reduce the time for signal searching.
- **Off:** Choose "Off" to restore the time for normal signal search.

Note: *Enabling this function may affect the stability for some equipment.*

Input reset menu

Return the factory default settings for input settings.

Audio menu

Audio volume menu

Adjust the volume level.

Audio mute menu

Use this option to temporarily turn off the sound.

- **On:** Choose “On” to turn mute on.
- **Off:** Choose “Off” to turn mute off.

Note: *“Mute” function affects both internal and external speaker volume.*

Audio reset menu

Return the factory default settings for audio settings.

USING THE PROJECTOR

Control menu

Control device ID menu

ID definition can be set up by menu (range 0-99), and allow user control an individual projector by using RS232 command.

Note: *For a full list of RS232 commands, please refer to the RS232 user manual on our website.*

Control remote settings menu

IR Function

Set the IR function setting.

- **On:** Choose “On”, the projector can be operated by the remote control from the top and front IR receivers.
- **Off:** Choose “Off”, the projector can’t be operated by the remote control. By selecting “Off”, you will be able to use the Keypad keys.

User 1 / User 2 / User 3

Assign the default function for User 1, User 2, or User 3 between HDMI 1, HDMI 2, Test Pattern, Brightness, Contrast, Sleep Timer, Color Matching, Color Temp, Gamma, Projection, Light Source Settings, Zoom, and Freeze.

Note: *The User 1 / User 2 / User 3 function availability depends on the remote control type. The remote control layout may vary depending on the region.*

Control keypad settings menu

Keypad Lock

When the keypad lock function is “On”, the Keypad will be locked. However, the projector can be operated by the remote control. By selecting “Off”, you will be able to reuse the Keypad.

Control LAN menu

Configure the projector’s network settings.

Network Status

Display the network connection status. (Read only)

MAC Address

Display the MAC address. (Read only)

DHCP

Turn on DHCP to automatically acquire IP address, subnet mask, gateway, and DNS.

IP Address

Assign the projector’s IP address.

Subnet Mask

Assign the projector’s subnet mask.

Gateway

Assign the projector’s gateway.

DNS

Assign the projector’s DNS.

IPv6 Settings

Configure the projector's IPv6 network settings.

- IPv6
  Enable and disable IPv6 functionality.
- Auto Configuration
  Set the automatic configuration method for the IPv6 address.
- Temporary Address
  Manage IPv6 temporary addresses.
- Link Local
  Link-local address related.
- IP Address
  Assign the projector's IP address.
- Prefix Length
  Prefix length of IPv6 address.
- Gateway
  Assign the projector's gateway.
- DNS
  Assign the projector's DNS.

USING THE PROJECTOR

How to use web browser to control your projector

1. Turn “On” the DHCP option on projector to allow a DHCP server to automatically assign an IP address.
2. Open the web browser in your PC and type in the projector’s IP address (“Control > LAN > IP Address”).
3. Enter the user name and password, and click “Login”.
   The projector’s configuration web interface opens.

Note:

- *The default user name and password is “admin”.*
- *The steps in this section is based on Windows 10 operating system.*

Making a direct connection from your computer to the projector*

1. Turn “Off” the DHCP option on the projector.
2. Configure the IP address, Subnet Mask, Gateway, and DNS on projector (“Control > LAN”).
3. Open ***Network & Internet*** page on your PC, and assign the identical network parameters to your PC as set on projector. Click “OK” to save the parameters.

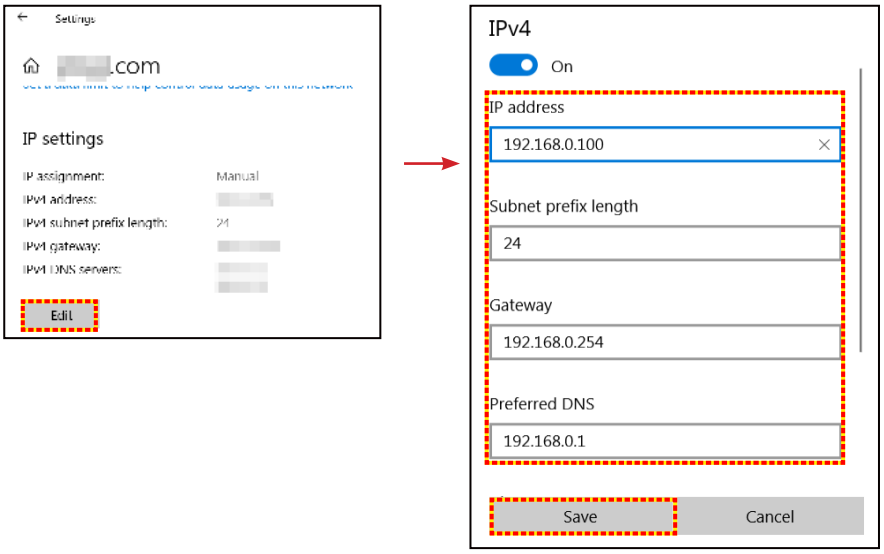

4. Open the web browser on your PC and type in to the URL field the IP address, assigned in step 3. Then press “Enter” key.

Reset

Reset the network settings to default factory values.

USING THE PROJECTOR

Control control menu

This projector can be controlled remotely by a computer or other external devices through the wired network connection. It allows the user to control one or more projectors from a remote control center, such as powering the projector on or off, and adjusting the image brightness or contrast.

Use the Control submenu to select a control device for the projector.

Crestron

Control the projector with Crestron controller and related software. (Port: 41794)

For more information, please visit https://www.crestron.com.

Extron

Control the projector with Extron devices. (Port: 2023)

For more information, please visit https://www.extron.com.

PJ Link

Control the projector with PJLink v2.0 commands. (Port: 4352)

For more information, please visit https://pjlink.jbmia.or.jp/english.

AMX Device Discovery

Control the projector with AMX devices. (Port: 9131)

For more information, please visit https://www.amx.com.

Telnet

Control the projector using RS232 commands though Telnet connection. (Port: 23)

For more information, refer to “RS232 by Telnet Function” on page 58.

HTTPS

Control the projector with web browser. (Port: 443)

For more information, refer to “How to use web browser to control your projector” on page 49.

Note:

- *Crestron is a registered trademark of Crestron Electronics, Inc. of the United States.*
- *Extron is a registered trademark of Extron Electronics, Inc. of the United States.*
- *AMX is a registered trademark of AMX LLC of the United States.*
- *PJLink applied for trademark and logo registration in Japan, the United States of America, and other countries by JBMIA.*
- *For more information about the various types of external devices which can be connected to the LAN / RJ45 port and remotely control the projector, as well as the supported commands for these external devices, please contact the Support-Service directly.*

USING THE PROJECTOR

Setup network control settings menu

LAN_RJ45 function

For simplicity and ease of operation, the projector provides diverse networking and remote management features. The LAN / RJ45 function of the projector through a network, such as remotely manage: Power On / Off, brightness, and contrast settings. Also, you can view the projector status information, such as: Video- Source, Sound-Mute, etc.

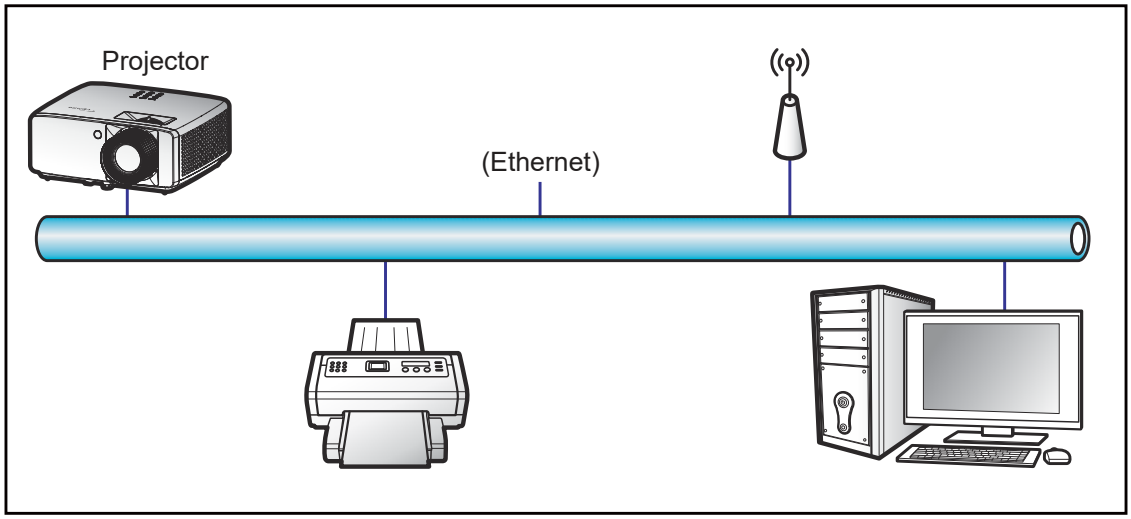

Wired LAN terminal functionalities

This projector can be controlled by using a PC (laptop) or other external device via LAN / RJ45 port and compatible with Crestron / Extron / AMX (Device -Discovery) / PJLink.

- Crestron is a registered trademark of Crestron Electronics, Inc. of the United States.
- Extron is a registered trademark of Extron Electronics, Inc. of the United States.
- AMX is a registered trademark of AMX LLC of the United States.
- PJLink applied for trademark and logo registration in Japan, the United States of America, and other countries by JBMIA.

The projector is supported by the specified commands of the Crestron Electronics controller and related software, for example RoomView®.

https://www.crestron.com/

This projector is compliant to support Extron device(s) for reference.

https://www.extron.com/

This projector is supported by AMX (Device Discovery).

https://www.amx.com/

This projector supports all commands of PJLink Class1 (Version 1.00).

https://pjlink.jbmia.or.jp/english/

For more detailed information about the various types of external devices which can be connected to the LAN / RJ45 port and remote control the projector, as well as the supported commands for these external devices, please contact the Support-Service directly.

USING THE PROJECTOR

LAN RJ45

1. Connect an RJ45 cable to RJ45 ports on the projector and the PC (laptop).

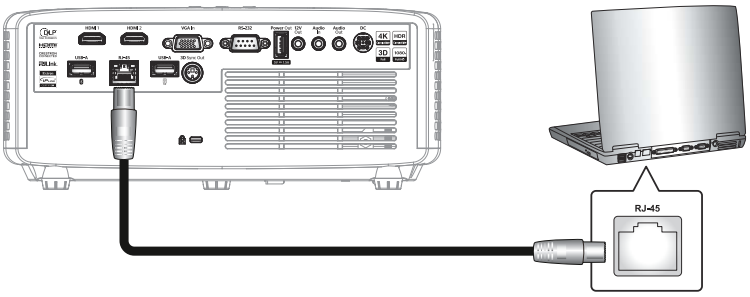

Note: *Available I/O ports differ by model.*

2. On the PC (Laptop), select **Start** > **Settings** > **Network & Internet**.

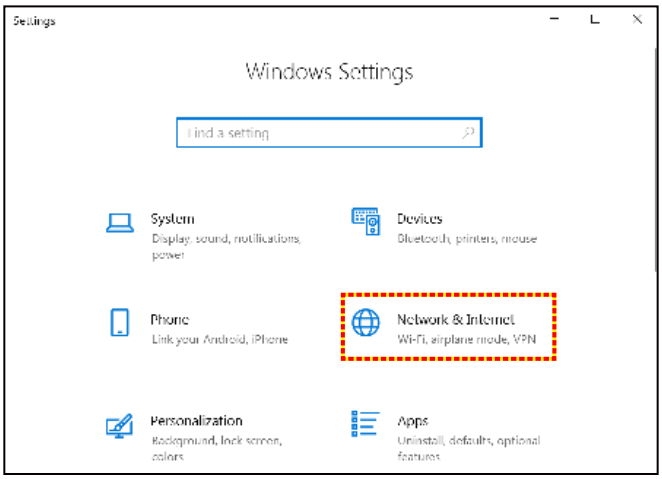

3. In the **Ethernet** section, select **Properties**.

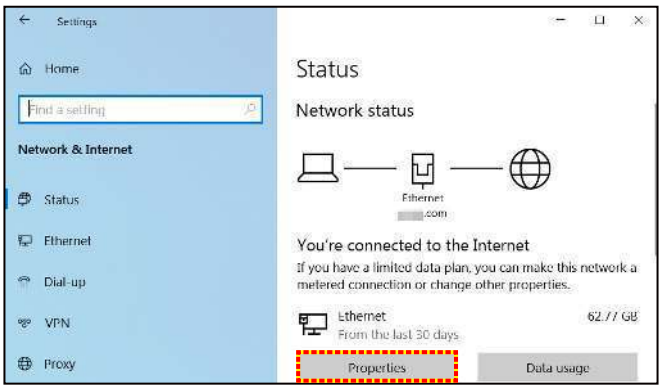

4. In the **IP settings** section, select **Edit**.

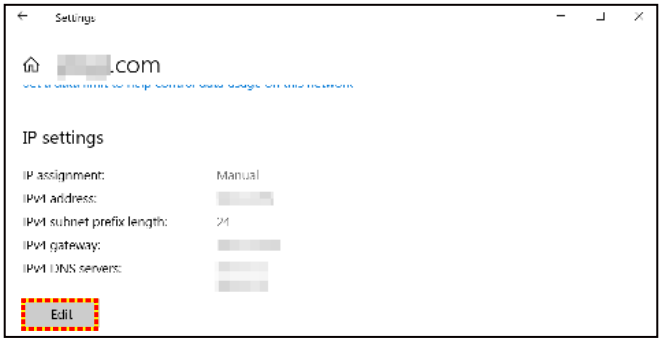

5. Type in the IP address and Gateway, then select “Save”.

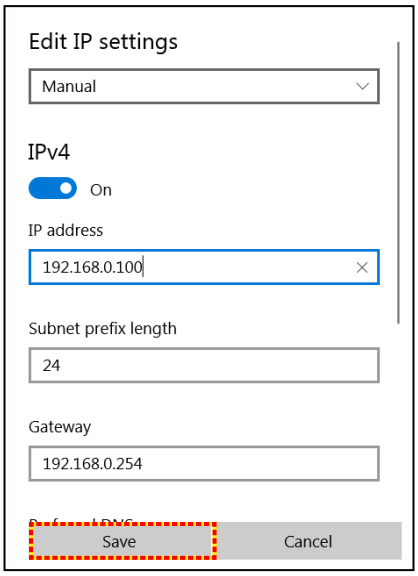

6. Press the “Menu” button on the projector.
7. Open on projector **Control** > **LAN**.
8. Enter the following connection parameters:
   – DHCP: Off
   – IP Address: 192.168.0.100
   – Subnet Mask: 255.255.255.0
   – Gateway: 192.168.0.254
   – DNS: 192.168.0.51
9. Press “Enter” to confirm settings.
10. Open a web browser, for example Microsoft Edge or Chrome with Adobe Flash Player 9.0 or higher installed.
11. In the Address bar, input the projector’s IP address: 192.168.0.100.

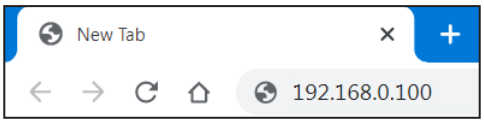

12. Press “Enter”.

The projector is setup for remote management. The LAN / RJ45 function displays as follows:

Log in

When you open the web page for the first time, you will see a screen like the one below. Please enter valid user password.

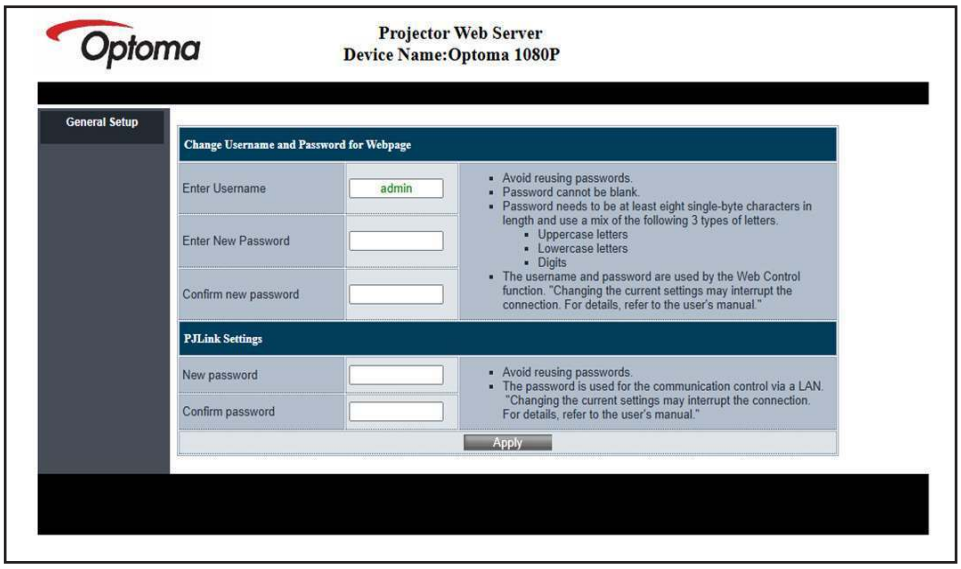

When you open the web page after entering a valid password, you will see a screen like the one below. Enter the password in the “Password” field.

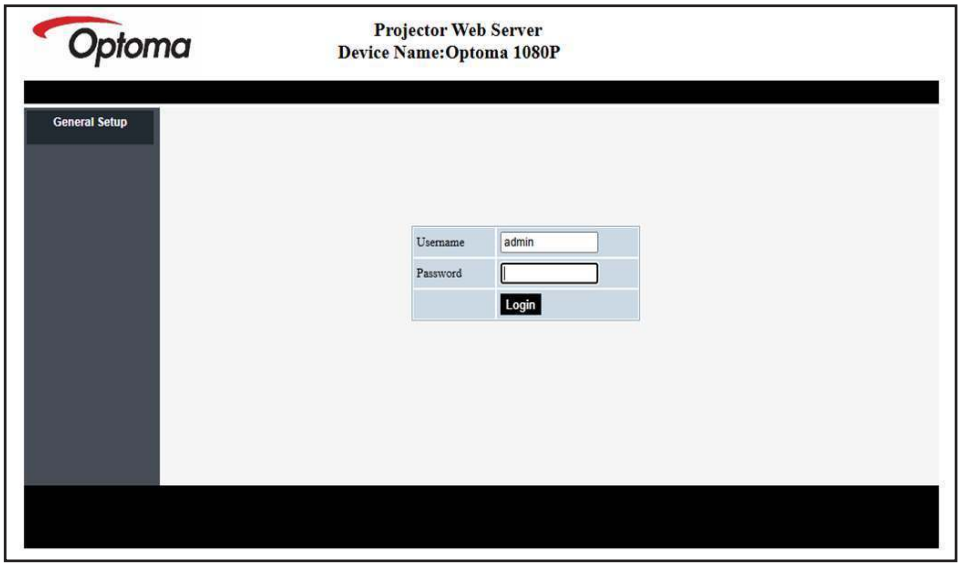

System Status

The current status of the projector is displayed.You can check projector model name, firmware version, current LAN configuration, and change the interface language if needed.

The version name displayed on the web page in the diagram may differ from the actual display.

General Setup

The projector name set here is also used in PJLink control.Only alphanumeric characters can be used as projector name. The maximum number of characters is 32.

You can use only alphanumeric characters in the password. The minimum number of characters is 8. If you enter an invalid character, “Invalid Character” warning is displayed.

If the characters of new password and the characters of confirm (new) password do not match, error message will be displayed. In this case, re-enter the password.

Projector Control

You can control the projector with this item. The items for control are described in this section.

Control button: When you click a button, the corresponding function will be performed.

Network Setup

Set the network of the projector.

Network Setup (IPv6)

Enable IPv6 functionality and customize IP settings.

1. Protocol:
   a) On: Enable both IPv4 and IPv6 function simultaneously
   b) Off: Enable IPv4 only
2. Auto Configuration:
   a) On: The router automatically assigns IP addresses
   b) Manual: User manually sets the UP address
3. Temporary Address:
   a) On: Automatically assigned IP addresses are temporary
   b) Off: Automatically assigned IP addresses are not subject to time limits
4. Link Local: With IPv6 enabled, this address can be used to access the IPv6 web page when the assigned IP address is invalid
5. IP Address: You can use this address to access the IPv6 webpage
6. Prefix Length: Prefix length of IPv6 address (Generally 64)
7. Gateway: Gateway address
8. DNS Servers 1: DNS1 address
9. DNS Server 2: DNS2 address

Steps to log into an IPv6 webpage:

1. Add '[' before and ']' after 192.168.0.100 in the IPv4 URL.
2. Replace 192.168.0.100 with the IPv6 link local/IP address. (https://[0000:0000:0000:0000:0000:0000:0000:0000]/index_login.asp).
3. You can log in after confirmation.

Alert Setup

You can send email alerts when an error occurs. You can carry out settings for alert mail in this section.

1. Alert types: Check the type of error for which you want to send alert mail.
2. Alert mail notification: Check and perform the following settings:
   - SMTP Setting: Set the following:
     a) SMTP Port: SMTP server port
     b) Encryption: Select encryption protocol
     c) SMTP Server: Server address (server name) (SMTP server)
     d) From: e-mail address of the sender
     e) User Name: User name of the mail server
     f) Password: Mail server password.
   - Email Setting: Set the following:
     a) Mail Subject
     b) Mail Content
     c) To: Enter the e-mail address of the sender.
3. Click “Apply” to fix the value.
4. Enter the IP address of projector in *xxx.xxx.xxx.xxx.
5. Send Test Mail.

   When you click [Send Test Mail], test email will be sent. The text will be “Email Test xxx.xxx.xxx.xxx *”.

OMS

Click “Binding with OMS” and follow the instructions to use the OMS Function.

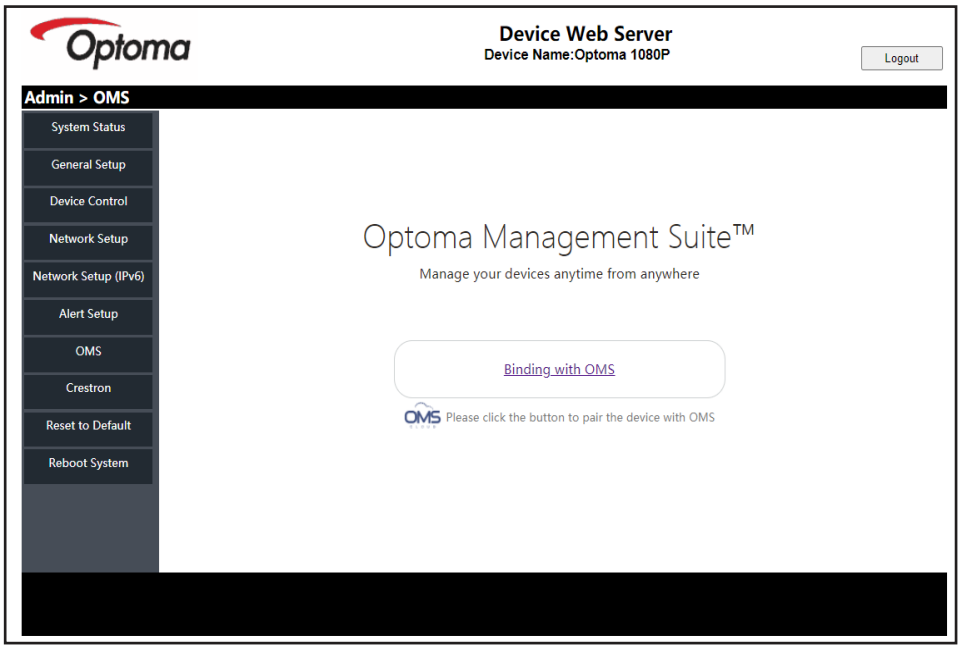

RS232 by Telnet Function

As an alternative method of control, this projector has RS232 command control by TELNET for LAN / RJ45 interface.

Quick Start-Guide for "RS232 by Telnet"

- Check and get the IP address on OSD of the projector.
- Make sure that the PC / laptop can access the web-page of the projector.
- Make sure that "Windows Firewall" setting is set to disabled in case of "TELNET" function filtering out by PC / laptop.

1. Click on **Search** and then enter "cmd" as a search word. Press the "Enter" key.

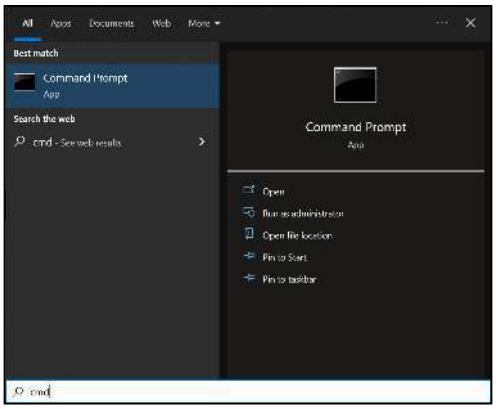

2. Open the Command Prompt app.
3. Input the command format as follows:
   – telnet ttt.xxx.yyy.zzz 23 ("Enter" key pressed)
   – (ttt.xxx.yyy.zzz: IP-Address of the projector)
4. If Telnet-Connection ready, and user can have RS232 command input, then press the "Enter" key and Telnet connection should be ready for RS232 command control.

Specification for "RS232 by TELNET":

1. Telnet: TCP.
2. Telnet port: 23 (for further details, please contact the Optoma service team).
3. Telnet utility: Windows "TELNET.exe" (console mode).
4. To end the Telnet session, just close the Command Prompt app window.
5. Windows Telnet utility directly after TELNET connection ready.
   – Limitation 1 for Telnet-Control: There cannot be more than 50 bytes for successive network payload for Telnet-Control application.
   – Limitation 2 for Telnet-Control: There cannot be more than 26 bytes for successive RS232 command for Telnet-Control.
   – Limitation 3 for Telnet-Control: Minimum delay for next command must be more than 200 (ms).

Control reset menu

Return the factory default settings for control settings.

USING THE PROJECTOR

Information menu

Information menu

View the projector information as listed below:

- Regulatory
- Serial Number
- Source
- Color Info.
- Light Source Hours
- Picture Mode
- Device ID
- Light Source Mode
- OMS
- FW Version

ADDITIONAL INFORMATION

Compatible resolutions

Note: *Long-distance adaptation solution: To ensure the best image quality, we recommend using high-speed or certified cables and keeping the cable length within 5 meters.*

Input Signal for HDMI

Signal	Resolution	Refresh Rate(Hz)	Notes for Mac
VGA	640 x 480	60	Mac 60/72/85/
SVGA	800 x 600	60(*2)/72/85/120(*2)	Mac 60/72/85
XGA	1024 x 768	48/50(*4)/60(*2)/70/75/85/120(*2)	Mac 60/70/75/85
SDTV(480I)	720 x 480	60	
SDTV(480P)	720 x 480	60	
SDTV(576I)	720 x 576	50	
SDTV(576P)	720 x 576	50	
WSVGA(1024X600)	1024 x 600	60 (*3)	
HDTV(720p)	1280 x 720	50(*2)/60/120(*2)	Mac 60
WXGA	1280 x 768	60/75/85	Mac 75
	1280 x 800	60/50/48hz(*4)	Mac 60
WXGA(*5)	1366 x 768	60	
SXGA	1280 x 1024	60/75/85	Mac 60/75
	1440 x 900	60	
SXGA+	1400 x 1050	60	
UXGA	1600 x 1200	60	
HDTV(1080I)	1920 x 1080	50/60	
HDTV(1080p)	1920 x 1080	24/30/50/60	Mac 60
WUXGA	1920 x 1200(*1)	60/50(*4)	Mac 60

Note:

- *(*1) 1920 x 1200 @60hz only support RB(reduced blanking).*
- *(*2) 3D timing for 3D Ready projector(STD) and True 3D projector(Option).*
- *(*3) New ERA & Data projector must have this timing WSVGA, Proscene and Home is nice to have.*
- *(*4) Proscene and Data projector >4,000L, Native resolution must support @50Hz/48Hz.*
- *(*5) Windows 8 standard timing.*

ADDITIONAL INFORMATION

True 3D Video Compatibility

		Input timing		
Input resolutions	HDMI 1.4a 3D Input	1280 x 720P @ 50Hz	Top-and-Bottom	
		1280 x 720P @ 60Hz	Top-and-Bottom	
		1280 x 720P @ 50Hz	Frame packing	
		1280 x 720P @ 60Hz	Frame packing	
		1920 x 1080i @ 50Hz	Side-by-Side(Half)	
		1920 x 1080i @ 60Hz	Side-by-Side(Half)	
		1920 x 1080P @ 24Hz	Top-and-Bottom	
		1920 x 1080P @ 24Hz	Frame packing	
	HDMI 1.3	1920 x 1080i @ 50Hz	Side-by-Side(Half)	SBS mode is on
		1920 x 1080i @ 60Hz		
		1280 x 720P @ 50Hz		
		1280 x 720P @ 60Hz		
		800 x 600 @ 60Hz		
		1024 x 768 @ 60Hz		
		1280 x 800 @ 60Hz		
		1920 x 1080i @ 50Hz	Top-and-Bottom	TAB mode is on
		1920 x 1080i @ 60Hz		
		1280 x 720P @ 50Hz		
		1280 x 720P @ 60Hz		
		800 x 600 @ 60Hz		
		1024 x 768 @ 60Hz		
		1280 x 800 @ 60Hz		
		1024 x 768 @ 120Hz	Frame Sequential	3D format is Frame sequential
		1280x 720 @ 120Hz		

Note:

- *If 3D input is 1080p@24hz, the DMD should replay with integral multiple with 3D mode*
- *1080i@25Hz and 720p@50Hz will run in 100Hz; other 3D timing will run in 120Hz.*
- *1080p@24Hz will run 144Hz.*

ADDITIONAL INFORMATION

EDID

Digital				
B0 / Established Timing	B0 / Standard Timing	B0 / Detail Timing	B1 / Video Mode	B1 / Detail Timing
720 x 400 @ 70Hz	Timing 1: 1024 x 768 @ 120Hz (4:3)	1080P: 1920 x 1080 @60Hz	640x480p @ 60Hz 4:3	1366 x 768 @ 60Hz
640 x 480 @ 60Hz	Timing 2: 1280 x 720 @ 60Hz (16:9)		720(1440) x 576i @ 50Hz 4:3	
640 x 480 @ 67Hz	Timing 3: 1280 x 720 @ 120Hz (16:9)		720(1440) x 576i @ 50Hz 16:9	
640 x 480 @ 72Hz	Timing 4: 1280 x 800 @ 60Hz (16:10)		720(1440) x 480i @ 60Hz 4:3	
640 x 480 @ 75Hz	Timing 5: 1280 x 1024 @ 60Hz (5:4)		720(1440) x 480i @ 60Hz 16:9	
800 x 600 @ 56Hz	Timing 6: 1440 x 900 @ 60Hz (16:10)		720 x 576p @ 50Hz 4:3	
800 x 600 @ 60Hz	Timing 7: 1400 x 1050 @ 60Hz (4:3)		720 x 576p @ 50Hz 16:9	
800 x 600 @ 72Hz	Timing 8: 1600 x 1200 @ 60Hz (4:3)		720 x 480p @ 60Hz 4:3	
800 x 600 @ 75Hz			720 x 480p @ 60Hz 16:9	
832 x 624 @ 75Hz			1280 x 720p @ 50Hz 16:9	
1024 x 768 @ 60Hz			1280 x 720p @ 60Hz 16:9	
1024 x 768 @ 70Hz			1920 x 1080i @ 60Hz 16:9	
1024 x 768 @ 75Hz			1920 x 1080i @ 50Hz 16:9	
1280 x 1024 @ 75Hz			1920 x 1080p @ 24 Hz 16:9	
1152 x 870 @ 75Hz			1920 x 1080p @ 30 Hz 16:9	
			1920 x 1080p @ 50Hz 16:9	
			1920 x 1080p @ 60Hz 16:9	
			1920 x 1080p @ 120 Hz 16:9	
			3840 x 2160p @ 24 Hz 16:9	
			3840 x 2160p @ 25 Hz 16:9	
			3840 x 2160p @ 30 Hz 16:9	
			3840 x 2160p @ 50Hz 16:9	
			3840 x 2160p @ 60Hz 16:9	
			4096 x 2160p @ 24Hz 256:135	
			4096 x 2160p @ 25Hz 256:135	
			4096 x 2160p @ 30Hz 256:135	
			4096 x 2160p @ 50Hz 256:135	
			4096 x 2160p @ 60Hz 256:135	

ADDITIONAL INFORMATION

Analog				
B0 / Established Timing	B0 / Standard Timing	B0 / Detail Timing	B1 / Video Mode	B1 / Detail Timing
720 x 400 @ 70Hz	Timing 1: 1280 x 720 @ 60Hz (16:9)	1080P: 1920 x 1080 @60Hz		1366 x 768 @ 60Hz
640 x 480 @ 60Hz	Timing 2: 1280 x 800 @ 60Hz (16:10)			1920 x 1200 @ 60Hz
640 x 480 @ 67Hz	Timing 3: 1280 x 1024 @ 60Hz (5:4)			
640 x 480 @ 72Hz	Timing 4: 1400 x 1050 @ 60Hz (4:3)			
640 x 480 @ 75Hz	Timing 5: 1600 x 1200 @ 60Hz (4:3)			
800 x 600 @ 56Hz	Timing 6: 1440 x 900 @ 60Hz (16:10)			
800 x 600 @ 60Hz	Timing 7: 1280 x 720 @ 120 Hz (16:9)			
800 x 600 @ 72Hz	Timing 8: 1024 x 768 @ 120 Hz (4:3)			
800 x 600 @ 75Hz				
832 x 624 @ 75Hz				
1024 x 768 @ 60Hz				
1024 x 768 @ 70Hz				
1024 x 768 @ 75Hz				
1280 x 1024 @ 75Hz				
1152 x 870 @ 75Hz				

ADDITIONAL INFORMATION

Image size and projection distance

Zoom ratio 1.6x model

Diagonal Length Size of (16:9) Screen	Screen Size W x H				Projection Distance (D)				Offset (Hd)	
	(m)		(inch)		(m)		(feet)			
	Width	Height	Width	Height	Wide	Tele	Wide	Tele	(m)	(inch)
30	0.66	0.37	26.15	14.71	0.93	1.49	3.05	4.88	0.06	2.35
40	0.89	0.50	34.86	19.61	1.24	1.98	4.07	6.51	0.08	3.14
50	1.11	0.62	43.58	24.51	1.55	2.48	5.08	8.13	0.10	3.92
60	1.33	0.75	52.29	29.42	1.86	2.98	6.10	9.76	0.12	4.71
70	1.55	0.87	61.01	34.32	2.170	3.47	7.12	11.39	0.14	5.49
80	1.77	1.00	69.73	39.22	2.48	3.97	8.13	13.02	0.16	6.28
90	1.99	1.12	78.44	44.12	2.79	4.46	9.15	14.64	0.18	7.06
100	2.21	1.25	87.16	49.03	3.099	4.96	10.17	16.27	0.20	7.84
120	2.66	1.49	104.59	58.83	3.72	5.95	12.20	19.52	0.24	9.41
150	3.32	1.87	130.74	73.54	4.65	7.44	15.25	24.40	0.30	11.77
180	3.98	2.24	156.88	88.25	5.58	8.93	18.30	29.28	0.36	14.12
200	4.43	2.49	174.32	98.05	6.20	9.92	20.34	32.54	0.40	15.69
250	5.53	3.11	217.89	122.57	7.75	12.40	25.42	40.67	0.50	19.61
300	6.64	3.74	261.47	147.08	9.30	14.88	30.50	48.81	0.60	23.53

Zoom ratio 1.1x model

Diagonal Length Size of (16:9) Screen	Screen Size W x H				Projection Distance (D)				Offset (Hd)	
	(m)		(inch)		(m)		(feet)			
	Width	Height	Width	Height	Wide	Tele	Wide	Tele	(m)	(inch)
30	0.66	0.37	26.15	14.71	0.98	1.08	3.22	3.53	0.06	2.35
40	0.89	0.50	34.86	19.61	1.31	1.43	4.29	4.70	0.08	3.14
50	1.11	0.62	43.58	24.51	1.63	1.79	5.36	5.88	0.10	3.92
60	1.33	0.75	52.29	29.42	1.96	2.15	6.43	7.06	0.12	4.71
70	1.55	0.87	61.01	34.32	2.29	2.51	7.51	8.23	0.14	5.49
80	1.77	1.00	69.73	39.22	2.61	2.87	8.58	9.41	0.16	6.28
90	1.99	1.12	78.44	44.12	2.94	3.23	9.65	10.58	0.18	7.06
100	2.21	1.25	87.16	49.03	3.27	3.58	10.72	11.76	0.20	7.84
120	2.66	1.49	104.59	58.83	3.92	4.30	12.87	14.11	0.24	9.41
150	3.32	1.87	130.74	73.54	4.90	5.38	16.08	17.64	0.30	11.77
180	3.98	2.24	156.88	88.25	5.88	6.45	19.30	21.17	0.36	14.12
200	4.43	2.49	174.32	98.05	6.54	7.17	21.44	23.52	0.40	15.69
250	5.53	3.11	217.89	122.57	8.17	8.96	26.80	29.40	0.50	19.61
300	6.64	3.74	261.47	147.08	9.80	10.75	32.16	35.28	0.60	23.53

ADDITIONAL INFORMATION

Zoom ratio 1.3x model

Diagonal Length Size of (16:9) Screen	Screen Size W x H				Projection Distance (D)				Offset (Hd)	
	(m)		(inch)		(m)		(feet)			
	Width	Height	Width	Height	Wide	Tele	Wide	Tele	(m)	(inch)
30	0.66	0.37	26.15	14.71	0.75	0.98	2.46	3.20	0.06	2.35
40	0.89	0.50	34.86	19.61	1.00	1.30	3.28	4.27	0.08	3.14
50	1.11	0.62	43.58	24.51	1.25	1.63	4.10	5.34	0.10	3.92
60	1.33	0.75	52.29	29.42	1.50	1.95	4.92	6.41	0.12	4.71
70	1.55	0.87	61.01	34.32	1.75	2.28	5.75	7.47	0.14	5.49
80	1.77	1.00	69.73	39.22	2.00	2.60	6.57	8.54	0.16	6.28
90	1.99	1.12	78.44	44.12	2.25	2.93	7.39	9.61	0.18	7.06
100	2.21	1.25	87.16	49.03	2.50	3.25	8.21	10.68	0.20	7.84
120	2.66	1.49	104.59	58.83	3.00	3.91	9.85	12.81	0.24	9.41
150	3.32	1.87	130.74	73.54	3.75	4.88	12.31	16.02	0.30	11.77
180	3.98	2.24	156.88	88.25	4.50	5.86	14.77	19.22	0.36	14.12
200	4.43	2.49	174.32	98.05	5.00	6.51	16.41	21.35	0.40	15.69
250	5.53	3.11	217.89	122.57	6.25	8.14	20.52	26.69	0.50	19.61
300	6.64	3.74	261.47	147.08	7.50	9.76	24.62	32.03	0.60	23.53

ADDITIONAL INFORMATION

Zoom ratio 1.0x model

Diagonal Length Size of (16:9) Screen	Screen Size W x H				Projection Distance (D)				Offset (Hd)	
	(m)		(inch)		(m)		(feet)			
	Width	Height	Width	Height	Wide	Tele	Wide	Tele	(m)	(inch)
30	0.66	0.37	26.15	14.71	0.33	0.33	1.08	1.08	0.06	2.35
40	0.89	0.50	34.86	19.61	0.44	0.44	1.44	1.44	0.08	3.14
50	1.11	0.62	43.58	24.51	0.55	0.55	1.80	1.80	0.10	3.92
60	1.33	0.75	52.29	29.42	0.66	0.66	2.16	2.16	0.12	4.71
70	1.55	0.87	61.01	34.32	0.769	0.77	2.52	2.52	0.14	5.49
80	1.77	1.00	69.73	39.22	0.88	0.88	2.88	2.88	0.16	6.28
90	1.99	1.12	78.44	44.12	0.99	0.99	3.24	3.24	0.18	7.06
100	2.21	1.25	87.16	49.03	1.098	1.10	3.60	3.60	0.20	7.84
120	2.66	1.49	104.59	58.83	1.32	1.32	4.32	4.32	0.24	9.41
150	3.32	1.87	130.74	73.54	1.65	1.65	5.41	5.41	0.30	11.77
180	3.98	2.24	156.88	88.25	1.98	1.98	6.49	6.49	0.36	14.12
200	4.43	2.49	174.32	98.05	2.20	2.20	7.21	7.21	0.40	15.69
250	5.53	3.11	217.89	122.57	2.75	2.75	9.01	9.01	0.50	19.61
300	6.64	3.74	261.47	147.08	3.30	3.30	10.81	10.81	0.60	23.53

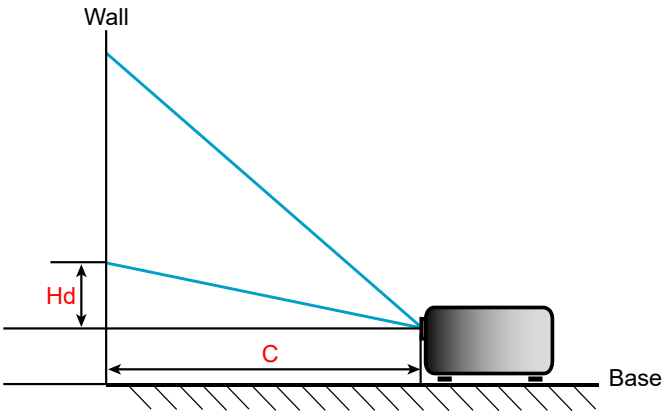

ADDITIONAL INFORMATION

Projector dimensions and ceiling mount installation

1. To prevent damage to your projector, please use the Optoma ceiling mount.
2. If you wish to use a third party ceiling mount kit, please ensure the screws used to attach a mount to the projector meet the following specifications:
   - Screw type: M4*10mm
   - Minimum screw length: 10mm

Zoom ratio 1.0x model

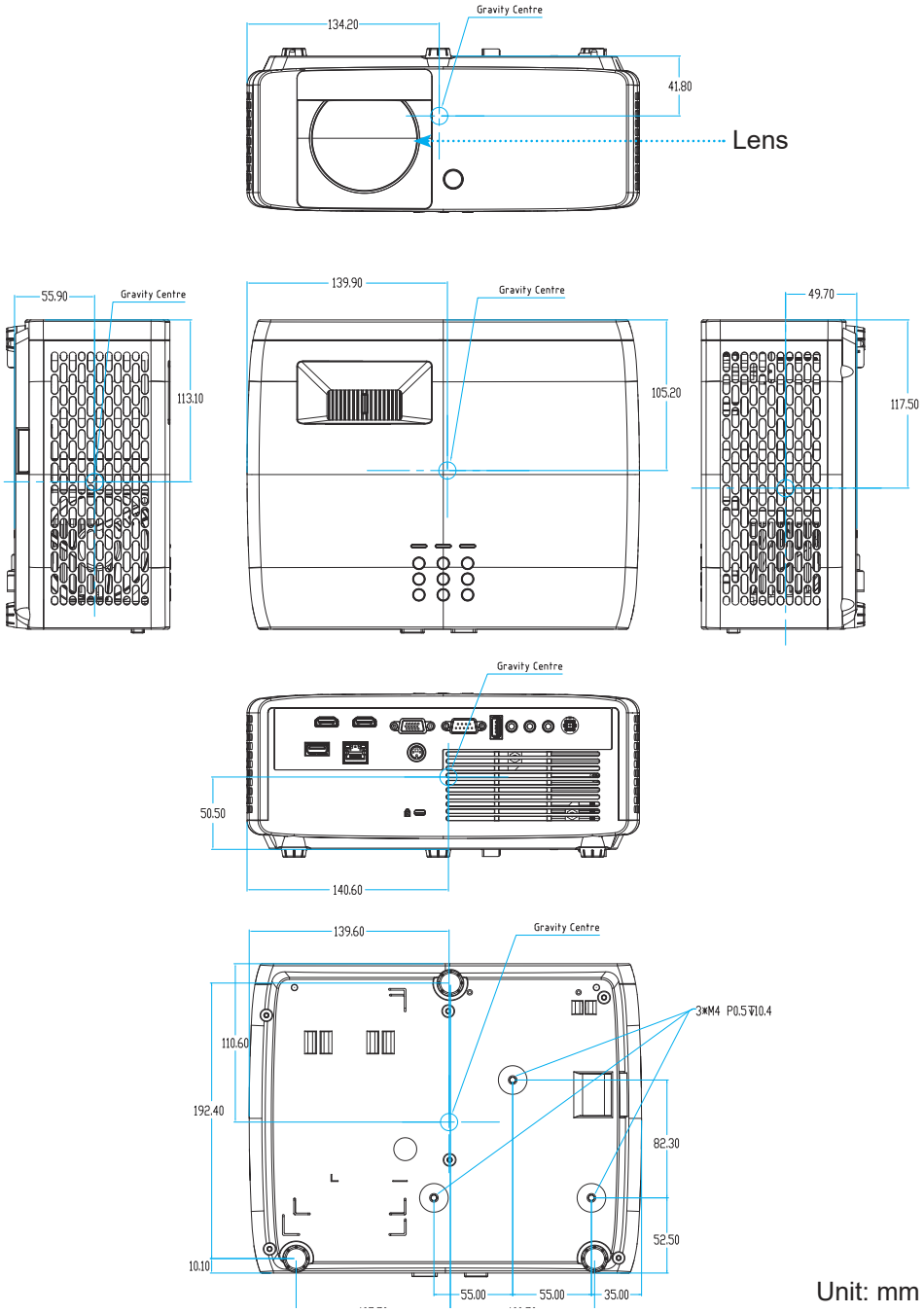

ADDITIONAL INFORMATION

Zoom 1.1x & 1.3x model

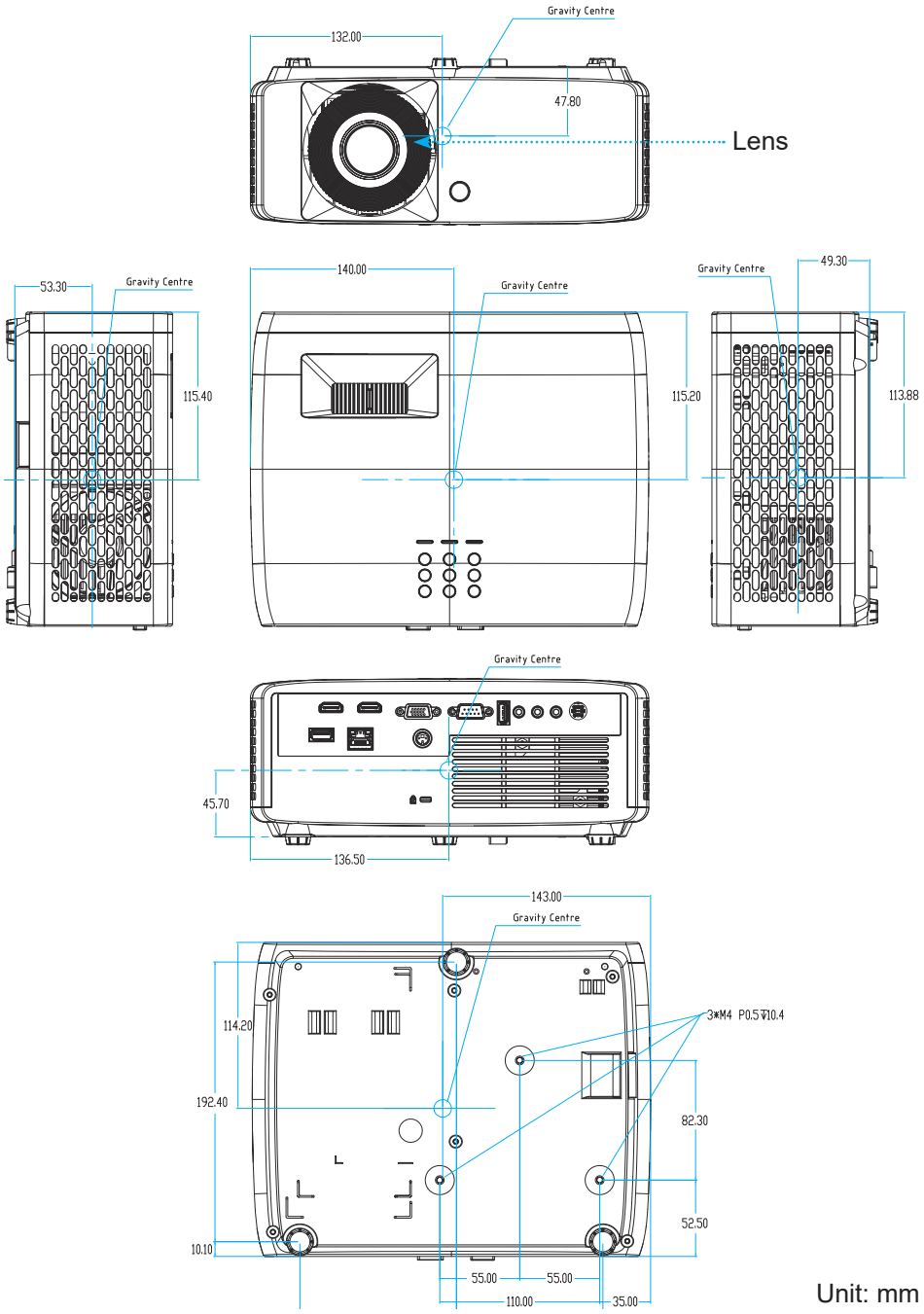

ADDITIONAL INFORMATION

Zoom 1.6x model

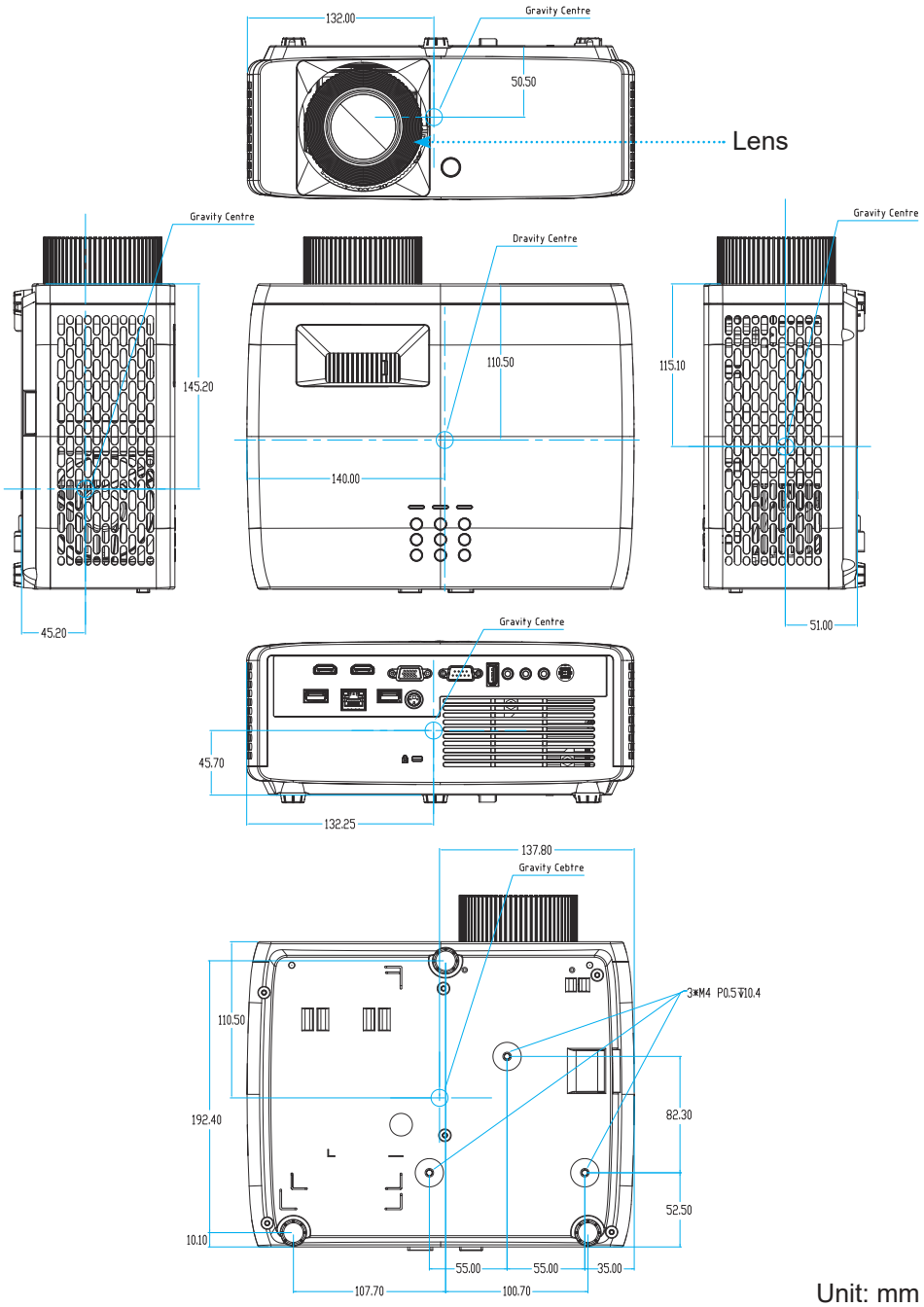

Unit: mm

Note:

- *Please note that damage resulting from incorrect installation will void the warranty.*
- *Available I/O ports differ by model.*

Warning:

- If you buy a ceiling mount from another company, please be sure to use the correct screw size. Screw size will vary depending on the thickness of the mounting plate.
- Be sure to keep at least 10 cm gap between the ceiling and the bottom of the projector.
- Avoid installing the projector near a heat source.

ADDITIONAL INFORMATION

IR remote control codes

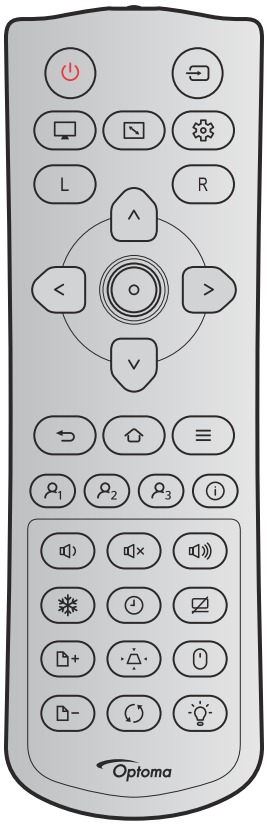

Key		Repeat Format	NEC Code				Description
			Custom Code		Data		
			Byte 1	Byte 2	Byte 3	Byte 4	
Power		F1	32	CD	02	FD	Press to turn on / off the projector.
Source		F1	32	CD	C3	3C	Press to select an input signal.
Display Mode		F1	32	CD	5	FA	Press to change the Display mode of a displayed image.
Aspect Ratio		F1	32	CD	64	9B	Press to change the aspect ratio of a displayed image.
Setup Menu		F1	32	CD	A8	57	Press to enter the Setup menu.
Mouse Left Click	L	F1	32	CD	CB	34	Left Mouse Button
Mouse Right Click	R	F1	32	CD	CC	33	Right Mouse Button

ADDITIONAL INFORMATION

Key		Repeat Format	NEC Code				Description
			Custom Code		Data		
			Byte 1	Byte 2	Byte 3	Byte 4	
Four directional select keys (Up)	∧	F2	32	CD	11	EE	Press to select items or make adjustments to your selection.
Four directional select keys (Left)	<	F2	32	CD	10	EF	
Four directional select keys (Right)	>	F2	32	CD	12	ED	
Four directional select keys (Down)	∨	F2	32	CD	14	EB	
Enter	○	F1	32	CD	0F	F0	Confirm your item selection.
Return	⮌	F1	32	CD	0D	F2	Press to return to the previous menu.
Home	⌂	F1	32	CD	A0	5F	Press to return to the main menu when OSD in sub menu. - No function when no OSD display. - No function when shortcut menu is displayed.
Menu	≡	F1	32	CD	0E	F1	Press to display or exit the on-screen display menus.
User 1	User_1	F1	32	CD	36	C9	Press to enter the assigned function.
User 2	User_2	F1	32	CD	65	9A	Press to enter the assigned function.
User 3	User_3	F1	32	CD	66	99	Press to enter the assigned function.
Information	ⓘ	F1	32	CD	25	DA	Press to enter the Information menu.
Volume -	🔈	F2	32	CD	8F	70	Press to decrease the volume.
Mute	🔇	F1	32	CD	52	AD	Press to momentarily turn off / on the audio.
Volume +	🔊	F2	32	CD	8C	73	Press to increase the volume.
Freeze	❄	F1	32	CD	6	F9	Press to freeze the projector image.
Sleep Timer	⏲	F1	32	CD	63	9C	Press to set the countdown timer.
AV Mute	⊘	F1	32	CD	3	FC	Press to hide / unhide the screen picture and turn off / on audio.
Page Up	🗋+	F2	32	CD	C1	3E	Press to page up.
Keystone	⏃	F1	32	CD	7	F8	Press to adjust image distortion caused by tilting the projector.
Mouse	🖱	F1	32	CD	3E	C1	Press to On / Off the USB mouse function.
Page Down	🗋−	F2	32	CD	C2	3D	Press to page down.
Resync	⟳	F1	32	CD	C4	3B	Press to automatically synchronize the projector to the input source.

ADDITIONAL INFORMATION

Key		Repeat Format	NEC Code				Description
			Custom Code		Data		
			Byte 1	Byte 2	Byte 3	Byte 4	
Light Source Mode		F1	32	CD	0A	F5	Press to automatically adjust the picture brightness to give an optimum contrast performance.

ADDITIONAL INFORMATION

Key		NEC Format	Byte 1	Byte 2	Byte 3	Byte 4
Power on		Format 1	32	CD	02	FD
Source		Format 1	32	CD	C3	3C
Re-sync		Format 1	32	CD	C4	3B
Aspect Ratio		Format 1	32	CD	64	9B
Home		Format 1	32	CD	92	6D
Keystone		Format 1	32	CD	07	F8
Contrast		Format 1	32	CD	42	BD
3D	3D	Format 1	32	CD	89	76
Brightness		Format 1	32	CD	41	BE
Mode		Format 1	32	CD	05	FA
Low Latency Mode		Format 1	32	CD	DD	22
CMS	CMS	Format 1	32	CD	F0	0F

ADDITIONAL INFORMATION

Key		NEC Format	Byte 1	Byte 2	Byte 3	Byte 4
FILMMAKER MODE		Format 1	32	CD	DF	20
HDR	HDR	Format 1	32	CD	DC	23
Four direction keys	∧	Format 2	32	CD	11	EE
	∨	Format 2	32	CD	14	EB
	<	Format 2	32	CD	10	EF
	>	Format 2	32	CD	12	ED
Enter		Format 2	32	CD	0F	F0
Return		Format 1	32	CD	0D	F2
Menu		Format 2	32	CD	0E	F1
Vol -		Format 2	32	CD	DA	25
Mute		Format 1	32	CD	52	AD
Vol +		Format 2	32	CD	8C	73
HDMI1	HDMI 1	Format 1	32	CD	16	E9
HDMI2	HDMI 2	Format 1	32	CD	30	CF
HDMI3	HDMI 3	Format 1	32	CD	98	67
User1	$_1$	Format 1	32	CD	36	C9
User2	$_2$	Format 1	32	CD	65	9A
User3	$_3$	Format 1	32	CD	66	99
User4	$_4$	Format 1	32	CD	09	F6

ADDITIONAL INFORMATION

Optoma Management Suite (OMS) binding

To start using OMS, complete the following steps:

1. From the *Device Web Server* page, select **OMS**.

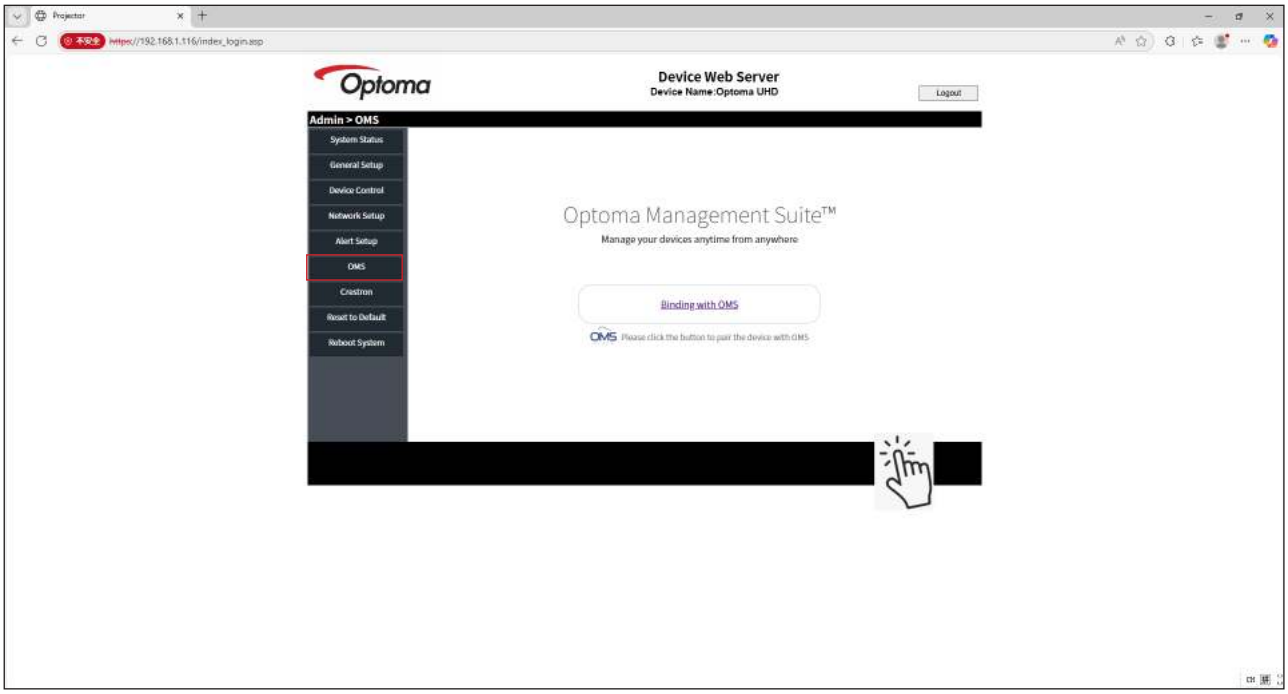

2. A new browser window opens. Select the location of your choice for the device. Then click **OK** to continue.

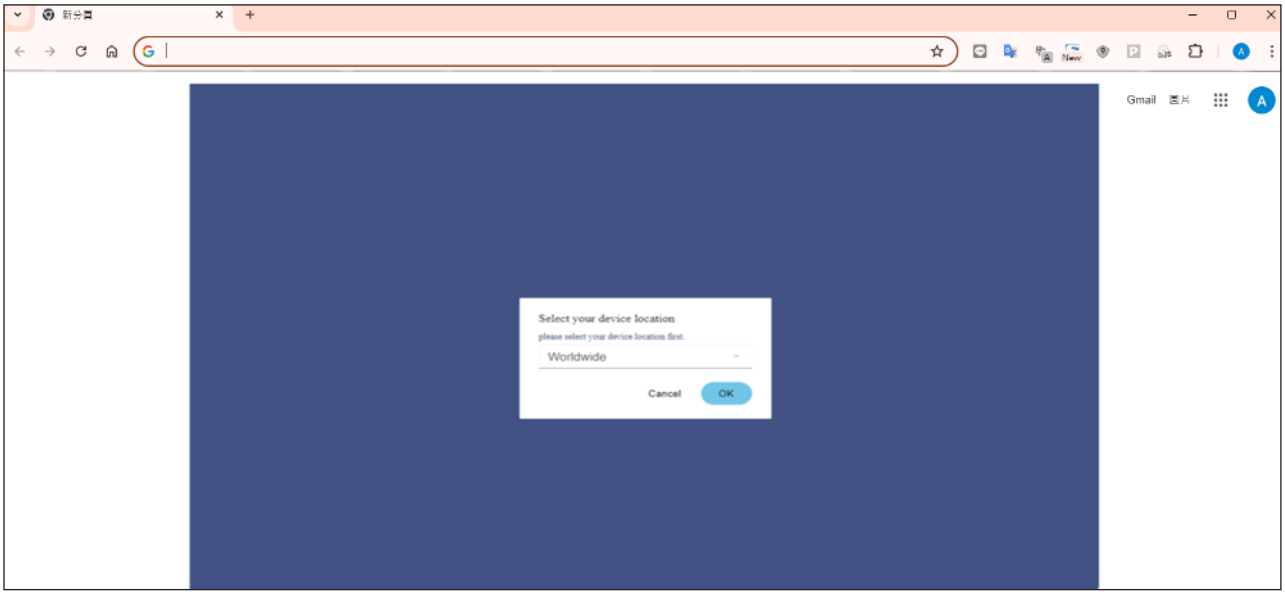

ADDITIONAL INFORMATION

3. Follow the on-screen instructions to bind your device with the OMS system.
   - Scan the QR code. Then sign up and login to the Optoma Management Suite website.
   - Select **Add a new device** and enter the serial number of the device into the OMS system.

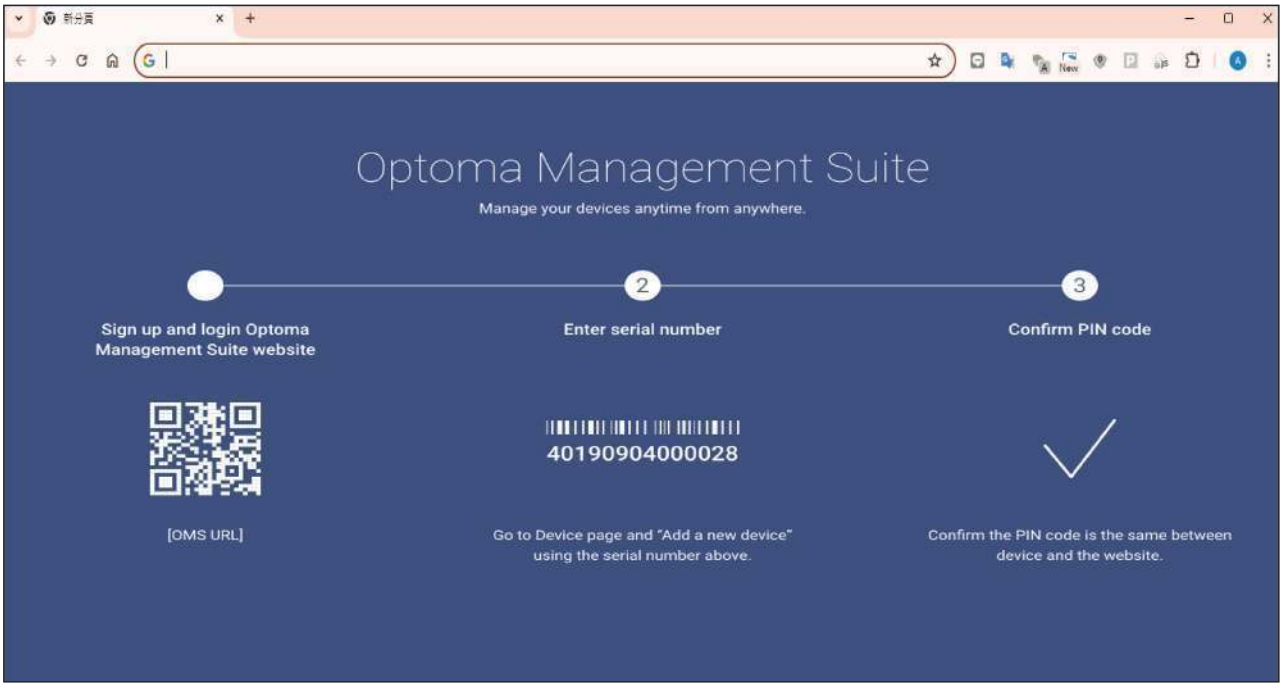

4. After the serial number has been entered into the OMS system, confirm the PIN codes on both screens. If the codes match, select **Confirm** to continue.

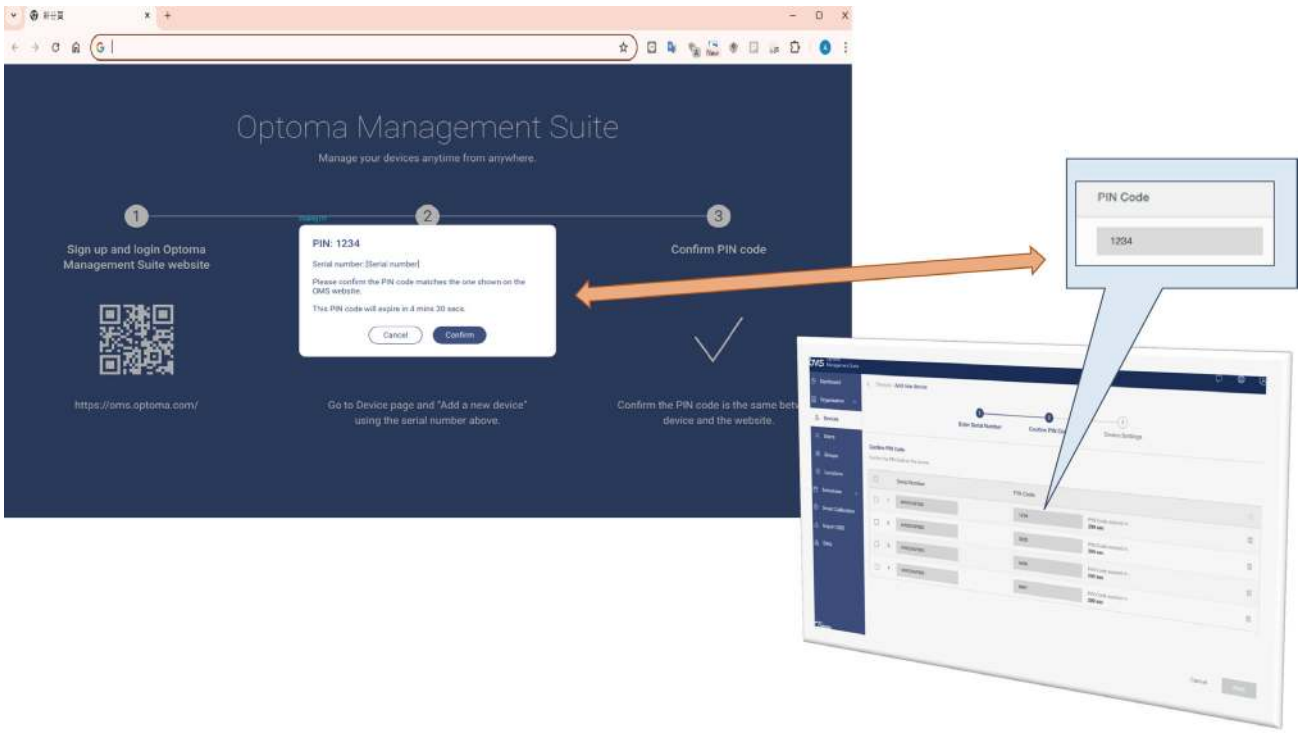

5. The device binding process is complete.

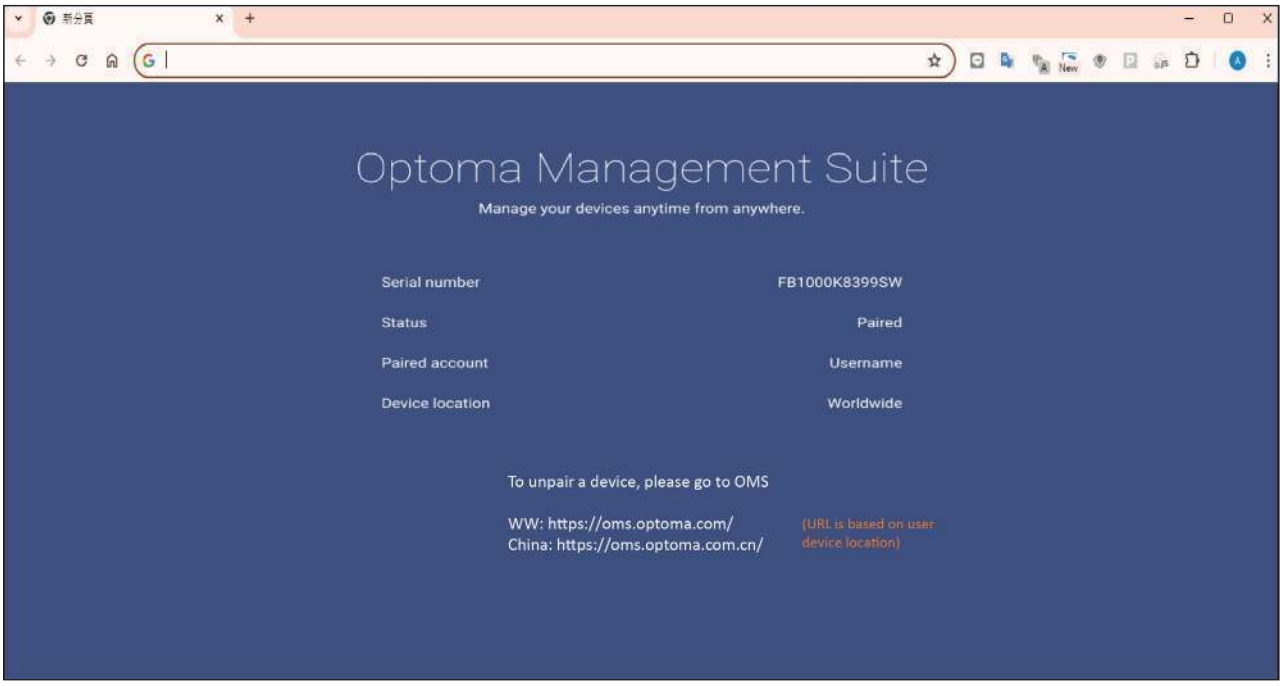

6. From the *Device Web Server* page, select **OMS** to obtain the binding information.

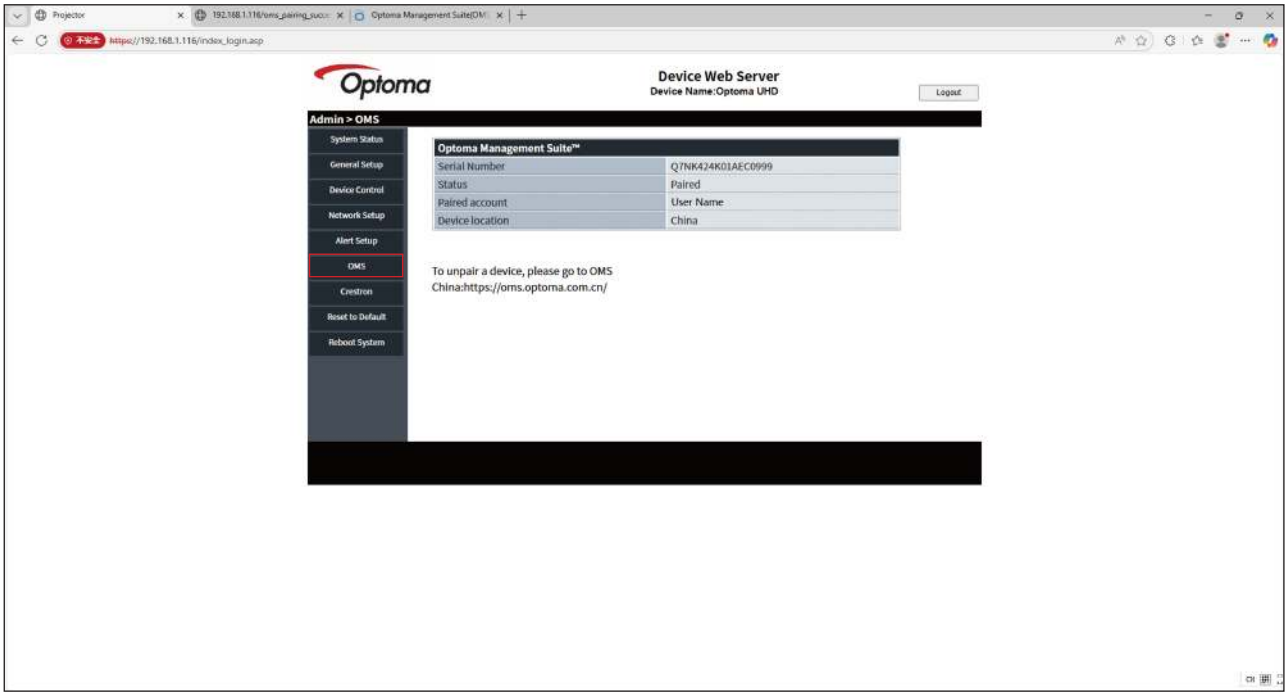

ADDITIONAL INFORMATION

Troubleshooting

If you experience a problem with your projector, please refer to the following information. If a problem persists, please contact your local reseller or service center.

Image problems

No image appears on-screen

- Ensure all the cables and power connections are correctly and securely connected as described in the "Installation" section.
- Ensure the pins of connectors are not crooked or broken.
- Ensure that the "Mute" feature is not turned on.

Image is out of focus

- Turn the focus ring clockwise or counterclockwise until the image is sharp and legible. (Please see page *20)*.
- Make sure the projection screen is between the required distance from the projector. (Please refer to pages *66~68*).

The image is stretched when displaying 16:9 DVD title

- When you play anamorphic DVD or 16:9 DVD, the projector will show the best image in 16: 9 format on projector side.
- If you play 4:3 format DVD title, please change the format as 4:3 in projector OSD.
- Please setup the display format as 16:9 (wide) aspect ratio type on your DVD player.

Image is too small or too large

- Turn the zoom lever clockwise or counterclockwise to increase or decrease the projected image size. (Please see page *20)*.
- Move the projector closer to or further from the screen.
- Press "Menu" on the projector panel, go to "Display → Aspect Ratio". Try the different settings.

Image has slanted sides:

- If possible, reposition the projector so that it is centered on the screen and below the bottom of the screen.

Image is reversed

- Select "Display → Projection Orientation" from the OSD and adjust the projection direction.

ADDITIONAL INFORMATION

Other problems

The projector stops responding to all controls

- If possible, turn off the projector, then unplug the power cord and wait at least 20 seconds before reconnecting power.

Remote control problems

If the remote control does not work

- Check the operating angle of the remote control is pointed within ±15° to the IR receiver on the projector.
- Make sure there are not any obstructions between the remote control and the projector. Move to within 6 m (19.7 ft) of the projector.
- Make sure batteries are inserted correctly.
- Replace batteries if they are exhausted.

ADDITIONAL INFORMATION

Warning indicators

When the warning indicators (see below) light up or flash, the projector will automatically shutdown:

- “Lamp” LED indicator is lit red and if “Power” indicator flashes red.
- “Temp” LED indicator is lit red and if “Power” indicator flashes red. This indicates the projector has overheated. Under normal conditions, the project can be switched back on.
- “Temp” LED indicator flashes red and if “Power” indicator flashes red.

Unplug the power cord from the projector, wait for 30 seconds and try again. If the warning indicator light up or flash, please contact your nearest service center for assistance.

LED lightning messages

Message	Power LED		Temp LED	Lamp LED
	(Red)	(Blue)	(Red)	(Red)
Standby state (Input power cord)	Steady light			
Power on (Warming)		Flashing (0.5 sec off / 0.5 sec on)		
Power on and Lamp lighting		Steady light		
Power off (Cooling)		Flashing (0.5 sec off / 0.5 sec on). Back to red steady light when cooling fan turns off.		
Error (Lamp failure)	Flashing			Steady light
Error (Fan failure)	Flashing		Flashing	
Error (Over temp.)	Flashing		Steady light	

- Power off:

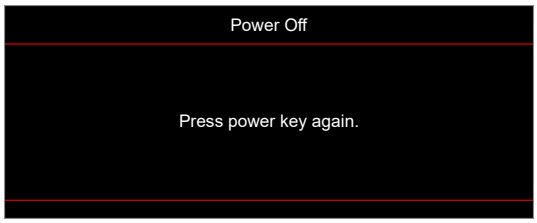

- Temperature warning:

ADDITIONAL INFORMATION

Specifications

Item	Description			
	Zoom range 1.1x	Zoom range 1.3x	Zoom range 1.0x	Zoom range 1.6x
Native Resolution	1920x1080 (w/o actuator)			
Maximum Resolution	• Graphic up to 3840x2160@60Hz • Maximum Resolution: 3840x2160@60Hz (HDMI (2.0)) • Maximum Bandwidth: 600MHz (HDMI (2.0))			
Lens	• Throw ratio: 1.48~1.62 (tolerance ±3%) • F-stop: 2.5~2.67 • Focal length: 21.86~24mm • Zoom range: 1.1x	• Throw ratio: 1.13~1.47 (tolerance ±3%) • F-stop: 2.43~2.78 • Focal length: 16.901~21.6076 mm • Zoom range: 1.3x	• Throw ratio: 0.496 (tolerance ±3%) • F-stop: 2.8 • Focal length: 7.51mm • Zoom range: 1.0x	• Throw ratio: 1.4~2.24 (tolerance ±3%) • F-stop: 2.5~3.26 • Focal length: 20.91~32.62mm • Zoom range: 1.6x
Offset	116%±5%			
Image size	• 30.6”~153”, Optimized @60” @Wide • 28”~139.6”, Optimized @60” @Tele	• 52”~120”, Optimized @60” @Wide • 40”~92.3”, Optimized @60” @Tele	70.8”~102.6”, Optimized @89”	• 45.3”~145.3”, Optimized @60” @Wide • 28.3”~90.7”, Optimized @60” @Tele
Projection distance	• 1~10m (mechanism travel) • 1~5m (Optical travel)	• 1~10m (mechanism travel) • 1.3~3m (Optical travel)	• 1~10m (mechanism travel) • 0.778~1.127m (Optical travel)	• 1~10m (mechanism travel) • 1.4~4.5m (Optical travel)
I/Os	• HDMI 2.0 x2 • VGA-In x1 • USB Type-A x2 • RJ45 x1 • RS232 x1 • DC jack x1 • Audio In x1 • Audio Out x1 • 3D Sync x1 • 12V Trigger x1	• HDMI 2.0 x2 • VGA-In x1 • USB Type-A x2 • RJ45 x1 • RS232 x1 • DC jack x1 • Audio In x1 • Audio Out x1 • 3D Sync x1 • 12V Trigger x1	• HDMI 2.0 x2 • VGA-In x1 • USB Type-A x2 • RJ45 x1 • RS232 x1 • DC jack x1 • Audio In x1 • Audio Out x1 • 3D Sync x1 • 12V Trigger x1	• HDMI 2.0 x2 • VGA-In x1 • USB Type-A x3 • RJ45 x1 • RS232 x1 • DC jack x1 • Audio In x1 • Audio Out x1 • 3D Sync x1 • 12V Trigger x1
Colour	1073.4 Million color			
Scan rate	• Horizontal scan rate: 15~135 KHz • Vertical scan rate: 24~120Hz			
Speaker	15W(+10%/-5%) x1			
Power consumption	• Typical (ECO mode): - 120W ±15%; 409.5BTU/hr ±15% - 118W ±15%; 402.6BTU/hr ±15% • Typical (Bright mode) - 170W ±15%; 580.0BTU/hr ±15% - 168W ±15%; 573.2BTU/hr ±15%			
Input current	9.23A			

ADDITIONAL INFORMATION

Item	Description			
	Zoom range 1.1x	Zoom range 1.3x	Zoom range 1.0x	Zoom range 1.6x
Installation orientations	Front, Rear, Ceiling, Rear-top			
Dimensions (W x D x H)	• 274 x 216 x 108.5 mm (without feet) • 274 x 216 x 114 mm (with feet)			
Weight	2.9 ±0.2 kg	2.9 ±0.2 kg	3 ±0.2 kg	3 ±0.2 kg
Environmental	Operating in 0~40°C (tolerance ±2°C, without condensation)			

Note: *All specifications are subject to change without notice.*

ADDITIONAL INFORMATION

Optoma global offices

For service or support, please contact your local office.

USA
Optoma Technology, Inc.
47697 Westinghouse Drive.
Fremont, Ca 94539

888-289-6786
510-897-8601
services@optoma.com

Canada
Optoma Technology, Inc.
47697 Westinghouse Drive.
Fremont, Ca 94539

888-289-6786
510-897-8601
services@optoma.com

Latin America
Optoma Technology, Inc.
47697 Westinghouse Drive.
Fremont, Ca 94539

888-289-6786
510-897-8601
services@optoma.com

Europe
Unit 1, Network 41, Bourne End Mills
Hemel Hempstead, Herts,
HP1 2UJ, United Kingdom
www.optoma.eu
Service Tel : +44 (0)1923 691865

+44 (0) 1923 691 800
+44 (0) 1923 691 888
service@tsc-europe.com

Benelux BV
Randstad 22-123
1316 BW Almere
The Netherlands
www.optoma.nl

+31 (0) 36 820 0252
+31 (0) 36 548 9052

France
Bâtiment E
81-83 avenue Edouard Vaillant
92100 Boulogne Billancourt, France

+33 1 41 46 12 20
+33 1 41 46 94 35
savoptoma@optoma.fr

Spain
C/ José Hierro,36 Of. 1C
28522 Rivas VaciaMadrid,
Spain

+34 91 499 06 06
+34 91 670 08 32

Deutschland
Am Nordpark 3
41069 Mönchengladbach
Germany

+49 (0) 2161 68643 0
+49 (0) 2161 68643 99
info@optoma.de

Scandinavia
Lerpeveien 25
3040 Drammen
Norway

+47 32 98 89 90
+47 32 98 89 99
info@optoma.no

PO.BOX 9515
3038 Drammen
Norway

Korea
https://www.optoma.com/kr/

Japan
https://www.optoma.com/jp/

Taiwan
https://www.optoma.com/tw/

China
Room 701, 7F, Building 1,
No.1388 Kaixuan Road,
Changning District
Shanghai, 200052, China

+86-21-62947376
+86-21-62947375
www.optoma.com.cn

Australia
https://www.optoma.com/au/