ARCTIC
arctic.de

MORE INFORMATION

MANUALS

LIMITED 6 YEARS WARRANTY

Carbon Neutral
green.arctic.de

All materials are compatible with RoHS requirements

Freezer 36-S

Multi Compatible Tower CPU Cooler

Specifications

General Specifications	
Compatibility	Intel®: LGA1851, LGA1700 AMD®: AM5, AM4
TIM	MX-7 (0.8g)
Warranty	6 Years
Operating Ambient Temperature	0–40 °C
Weight	685 g
Dimensions	126 (L) x 88 (W) x 156 (H) mm
Heatsink Specifications	
Heat Pipes	4 x Ø 6 mm Copper, Direct Touch
Heatsink	54 x 0.4 mm Aluminium Fins
Fan Specifications	
General	P12 Pro 120 (L) x 120 (W) x 25 (H) mm
Fan Speed	600–3000 rpm (PWM-controlled) 0 rpm below 5 % PWM
Bearing	Fluid Dynamic Bearing
Current | Voltage	0.33 A | 12 V DC
Cable Length	200 mm
Connector	4-Pin Fan Plug

4-Pin Fan Plug

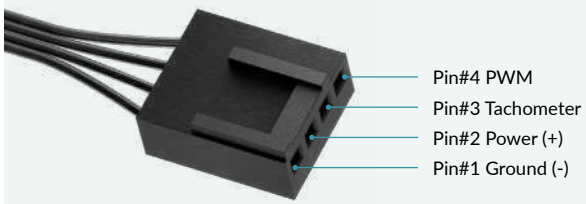

Shipping Information Freezer 36-S

Box Dimension	195 (L) x 170 (W) x 116 (H) mm
Gross Weight	990 g
SKU	ACFRE00194A
EAN	4895265000966
UPC	840033403634

Shipping Information Freezer 36-S (Black)

Box Dimension	195 (L) x 170 (W) x 116 (H) mm
Gross Weight	990 g
SKU	ACFRE00196A
EAN	4895265000980
UPC	840033403658
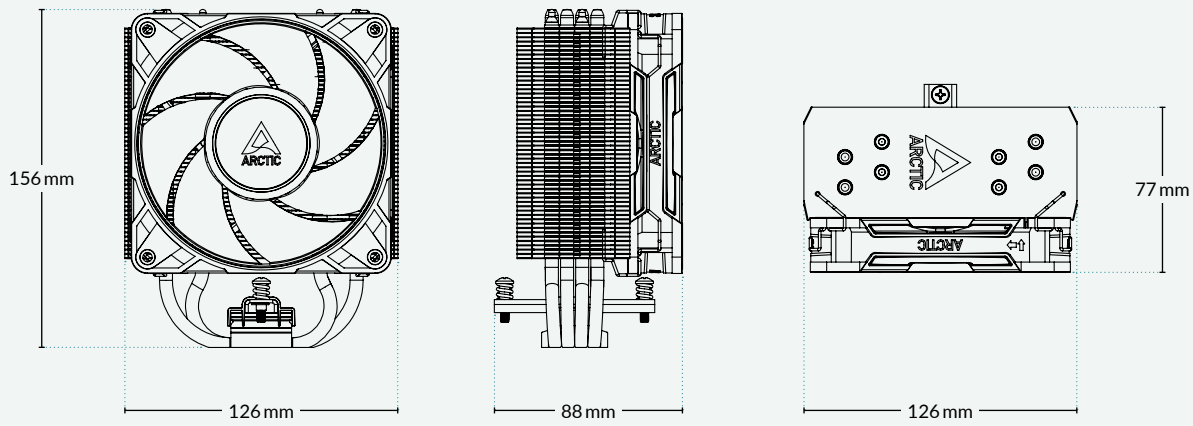
Dimensions