User Guide

HP Color Laser 150 series

www.hp.com/support/colorlaser150

Copyright and License

© Copyright 2019 HP Development Company, L.P.

Reproduction, adaptation, or translation without prior written permission is prohibited, except as allowed under the copyright laws.

The information contained herein is subject to change without notice.

The only warranties for HP products and services are set forth in the express warranty statements accompanying such products and services. Nothing herein should be construed as constituting an additional warranty. HP shall not be liable for technical or editorial errors or omissions contained herein.

- Adobe®, Adobe Photoshop®, Acrobat®, and PostScript® are trademarks of Adobe Systems Incorporated.
- Apple and the Apple logo are trademarks of Apple Inc., registered in the U.S. and other countries.
- OS X is a trademark of Apple Inc., registered in the U.S. and other countries.
- AirPrint is a trademark of Apple Inc., registered in the U.S. and other countries.
- iPad is a trademark of Apple Inc., registered in the U.S. and other countries.
- iPad, iPhone, iPod touch, Mac and Mac OS are trademarks of Apple Inc., registered in the U.S and other countries.
- Microsoft® and Windows® are U.S. registered trademarks of Microsoft Corporation.
- All other brand or product names are trademarks of their respective companies or organizations.

REV. 1.00

Table of Contents

Introduction

Key benefits 6
Features by model 7
Useful to know 10
About this user's guide 11
Safety information 12
Machine overview 18
Control panel overview 21
Turning on the machine 22
Installing the software 23

Learning the Basic Usage

Machine's basic settings 25
Media and tray 26

Printing

Basic Print 53
Canceling a print job 54
Opening printing preferences 55
Using a favorite setting 56
Using help 57
Printing features 58
Using HP Easy Printer Manager 63
Using Printer Status programs 66

Maintenance

Ordering supplies and accessories 69
Available supplies 70
Available maintenance parts 72
Storing the toner cartridge 73
Redistributing toner 75
Replacing the toner cartridge 76
Replacing the toner collection unit 77
Replacing the imaging drum 78
Cleaning the machine 80

Troubleshooting

Tips for avoiding paper jams 83

Clearing paper jams 84
Understanding the LEDs 86
A “Low Toner” or “Very Low Toner” message displays in Supplies information report 88
Paper feeding problems 89
Power and cable connecting problems 90
Solving other problems 91
Solve wireless network problems 100

Appendix

General specifications 104
Print media specifications 105
System requirements 108

Introduction

This chapter provides the information you need to know before using the machine.

- Key benefits 6
- Features by model 7
- Useful to know 10
- About this user’s guide 11
- Safety information 12
- Machine overview 18
- Control panel overview 21
- Turning on the machine 22
- Installing the software 23

Key benefits

Environmentally friendly

- To save paper, you can print multiple pages on a single sheet of paper.
- To save electricity, this machine automatically conserves electricity by substantially reducing power consumption when not in use.
- We recommend using recycled paper for saving energy.

Convenience

If you have Internet access, you can get help, support application, machine drivers, manuals, and order information from the HP website, www.hp.com/support/colorlaser150.

Wide range of functionality and application support

- Supports various paper sizes.
- Print watermark: You can customize your documents with words, such as "**CONFIDENTIAL**".
- Print posters: The text and pictures of each page of your document are magnified and printed across the multiple sheets of paper and can then be taped together to form a poster.

Supports various wireless network setting method

Wireless networking may not be available depending on the model.

- Using the (Wireless)
  - You can easily connect to a wireless network using the (Wireless) button on the machine and the access point (a wireless router).
- Using the USB cable
  - You can connect and set various wireless network settings using a USB cable.
- Using the Wi-Fi Direct
  - You can conveniently print from your mobile device using the Wi-Fi Direct feature.

Features by model

Some features and optional goods may not be available depending on model or country.

Operating System

Operating System	HP Color Laser 150a	HP Color Laser 150nw
Windows	●	●
Mac		
Linux	●	●

(●: Supported, Blank: Not supported)

Software

Software	HP Color Laser 150a	HP Color Laser 150nw
Printer driver	●	●
Printer Status	●	●
HP Embedded Web Server		●

(●: Supported, Blank: Not supported)

Variety feature

Features	HP Color Laser 150a	HP Color Laser 150nw
Hi-Speed USB 2.0	●	●
Network Interface Ethernet 10/100 Base TX wired LAN		●
Network Interface 802.11b/g/n wireless LAN[a]		●
Wi-Fi Protected Setup™ (WPS)		●

a.Depending on your country, wireless LAN card may not be available. For some countries, only 802.11 b/g can be applied. Contact your local HP dealer or the retailer where you bought your machine.

(●: Supported, Blank: Not supported)

Useful to know

Where can I download the machine's driver?

- Visit www.hp.com/support/colorlaser150 to download the latest machine's driver, and install it on your system.

Where can I purchase accessories or supplies?

- Inquire at a HP distributor or your retailer.
- Visit https://store.hp.com/. Select your country/region to view product service information.

The attention LED flashes or remains constantly on.

- Turn the product off and on again.
- Check the meanings of LED indications in this manual and troubleshoot accordingly (see "Understanding the LEDs" on page 86).

A paper jam has occurred.

- Open and close the cover (see "Front view" on page 19).
- Check the instructions on removing jammed paper in this manual and troubleshoot accordingly (see "Clearing paper jams" on page 84).

Printouts are blurry.

- The toner level might be low or uneven. Shake the toner cartridge.
- Try a different print quality setting.
- Replace the toner cartridge.

The machine does not print.

- Open the print queue list and remove the document from the list (see "Canceling a print job" on page 54).
- Remove the driver and install it again (see "Installing the software" on page 23).
- Select your machine as your default machine in your Windows.

About this user’s guide

This user's guide provides information for your basic understanding of the machine as well as detailed steps to explain machine usage.

- Do not discard this manual, and keep it for future reference.
- Read the safety information before using the machine.
- If you have a problem using the machine, refer to the troubleshooting chapter.
- Terms used in this user’s guide are explained in the glossary chapter.
- All illustrations in this user’s guide may differ from your machine depending on its options or model you purchased.
- The screenshots in this user's guide may differ from your machine depending on the machine’s firmware/driver version.
- The procedures in this user’s guide are mainly based on Windows 7.

Conventions

Some terms in this guide are used interchangeably, as below:

- Document is synonymous with original.
- Paper is synonymous with media, or print media.
- Machine refers to printer or MFP.

General icons

Icon	Text	Description
	Caution	Gives users information to protect the machine from possible mechanical damage or malfunction.
	Warning	Used to alert users to the possibility of personal injury.
	Note	Provides additional information or detailed specification of the machine function and feature.

Safety information

These warnings and precautions are included to prevent injury to you and others, and to prevent any potential damage to your machine. Be sure to read and understand all of these instructions before using the machine. After reading this section, keep it in a safe place for future reference.

Important safety symbols

Explanation of all icons and signs used in this chapter

	Warning	Hazards or unsafe practices that may result in severe personal injury or death.
	Caution	Hazards or unsafe practices that may result in minor personal injury or property damage.
	Do not attempt.	

Operating environment

Warning

	Do not use if the power cord is damaged or if the electrical outlet is not grounded. This could result in electric shock or fire.
	Do not place anything on top of the machine (water, small metal or heavy objects, candles, lit cigarettes, etc.). This could result in electric shock or fire.
	• If the machine gets overheated, it releases smoke, makes strange noises, or generates an odd odor, immediately turn off the power switch and unplug the machine. • The user should be able to access the power outlet in case of emergencies that might require the user to pull the plug out. This could result in electric shock or fire.
	Do not bend, or place heavy objects on the power cord. Stepping on or allowing the power cord to be crushed by a heavy object could result in electric shock or fire.

	Do not remove the plug by pulling on the cord; do not handle the plug with wet hands. This could result in electric shock or fire.

Caution

	During an electrical storm or for a period of non-operation, remove the power plug from the electrical outlet. This could result in electric shock or fire.
	Be careful, the paper output area is hot. Burns could occur.
	If the machine has been dropped, or if the cabinet appears damaged, unplug the machine from all interface connections and request assistance from qualified service personnel. Otherwise, this could result in electric shock or fire.
	If the machine does not operate properly after these instructions have been followed, unplug the machine from all interface connections and request assistance from qualified service personnel. Otherwise, this could result in electric shock or fire.
	If the plug does not easily enter the electrical outlet, do not attempt to force it in. Call an electrician to change the electrical outlet, or this could result in electric shock.
	Do not allow pets to chew on the AC power, telephone or PC interface cords. This could result in electric shock or fire and/or injury to your pet.

Operating method

Caution

	Do not forcefully pull the paper out during printing. It can cause damage to the machine.
	Be careful not to put your hand between the machine and paper tray. You may get injured.

	Be careful when replacing paper or removing jammed paper. New paper has sharp edges and can cause painful cuts.
	When printing large quantities, the bottom part of the paper output area may get hot. Do not allow children to touch. Burns can occur.
	When removing jammed paper, do not use tweezers or sharp metal objects. It can damage the machine.
	Do not allow too many papers to stack up in the paper output tray. It can damage the machine.
	Do not block or push objects into the ventilation opening. This could result in elevated component temperatures which can cause damage or fire.
	Use of controls or adjustments or performance of procedures other than those specified herein may result in hazardous radiation exposure.
	This machine's power reception device is the power cord. To switch off the power supply, remove the power cord from the electrical outlet.

Installation / Moving

Warning

	Do not place the machine in an area with dust, humidity, or water leaks. This could result in electric shock or fire.
	Place the machine in the environment where it meets the operating temperature and humidity specification. Do not use the machine when it is below freezing temperature or has recently been moved from a location below freezing temperature. Doing so may damage the machine. Only operate the machine when the internal temperature of the machine is within the operating temperature and humidity specifications. Otherwise, quality problems can occur and cause damage to the machine. See "General specifications" on page 104.

Caution

	Before moving the machine, turn the power off and disconnect all cords. The information below are only suggestions based on the units weight. If you have a medical condition that prevents you from lifting, do not lift the machine. Ask for help, and always use the appropriate amount of people to lift the device safety. Then lift the machine: • If the machine weighs under 20 kg (44.09 lbs), lift with 1 person. • If the machine weighs 20 kg (44.09 lbs) - 40kg (88.18 lbs), lift with 2 people. • If the machine weighs more than 40 kg (88.18 lbs), lift with 4 or more people. The machine could fall, causing injury or machine damage.
	Choose a flat surface with enough space for ventilation to place the machine. Also consider the space required to open the cover and trays. The place should be well-ventilated and be far from direct light, heat, and humidity.
	When using the machine for a long period of time or printing a large number of pages in a non-ventilated space, it could pollute the air and be harmful to your health. Place the machine in a well-ventilated space or open a window to circulate the air periodically.
	Do not place the machine on an unstable surface. The machine could fall, causing injury or machine damage.
	Use only No.26 AWG[a] or larger, telephone line cord, if necessary. Otherwise, it can cause damage to the machine.
	Make sure you plug the power cord into a grounded electrical outlet. Otherwise, this could result in electric shock or fire.
	Use the power cord supplied with your machine for safe operation. If you are using a cord which is longer than 2 meters (6 feet) with a 110V machine, then the gauge should be 16 AWG or larger. Otherwise, it can cause damage to the machine, and could result in electric shock or fire.
	Do not put a cover over the machine or place it in an airtight location, such as a closet. If the machine is not well-ventilated, this could result in fire.
	Do not overload wall outlets and extension cords. This can diminish performance, and could result in electric shock or fire.

	The machine should be connected to the power level which is specified on the label. If you are unsure and want to check the power level you are using, contact the electrical utility company.

a.AWG: American Wire Gauge

Maintenance / Checking

Caution

	Unplug this product from the wall outlet before cleaning the inside of the machine. Do not clean the machine with benzene, paint thinner or alcohol; do not spray water directly into the machine. This could result in electric shock or fire.
	When you are working inside the machine replacing consumables or cleaning the inside, do not operate the machine. You could get injured.
	Keep cleaning consumables away from children. Children could get hurt.
	Do not disassemble, repair or rebuild the machine by yourself. It can damage the machine. Call a certified technician when the machine needs repairing.
	To clean and operate the machine, strictly follow the user's guide provided with the machine. Otherwise, you could damage the machine.
	Keep the power cable and the contact surface of the plug clean from dust or water. Otherwise, this could result in electric shock or fire.
	• Do not remove any covers or guards that are fastened with screws. • Fuser units should only be repaired by a certified service technician. Repair by non-certified technicians could result in fire or electric shock. • The machine should only be repaired by a HP service technician.

Supply usage

Caution

	Do not disassemble the toner cartridge. Toner dust can be dangerous if inhaled or ingested.
	Do not burn any of the consumables such as toner cartridge or fuser unit. This could cause an explosion or uncontrollable fire.
	When storing consumables such as toner cartridges, keep them away from children. Toner dust can be dangerous if inhaled or ingested.
	Using recycled consumables, such as toner, can cause damage to the machine. In case of damage due to the use of recycled consumables, a service fee will be charged.
	For consumables that contain toner dust (toner cartridge, toner collection unit, Imaging drum, etc.) follow the instructions below. • When disposing of the consumables, follow the instructions for disposal. Refer to the reseller for disposal instructions. • Do not wash the consumables. • For a toner collection unit, do not reuse it after emptying the bottle. If you do not follow the instructions above, it may cause machine malfunction and environmental pollution. The warranty does not cover damages caused by a user's carelessness.
	When toner gets on your clothing, do not use hot water to wash it. Hot water sets toner into fabric. Use cold water.
	When changing the toner cartridge or removing jammed paper, be careful not to let toner dust touch your body or clothes. Toner dust can be dangerous if inhaled or ingested.

Machine overview

Components

The actual component may differ from the illustration below. Some components may change depending on the configuration.

	Machine[a]
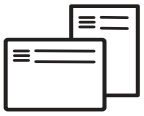	Setup guide and Reference guide
	Power cord
	Misc. accessories[b]

a.This illustration may differ from your machine depending on your model. There are various types of machine.

b.Miscellaneous accessories included with your machine may vary by country of purchase and specific model.

Front view

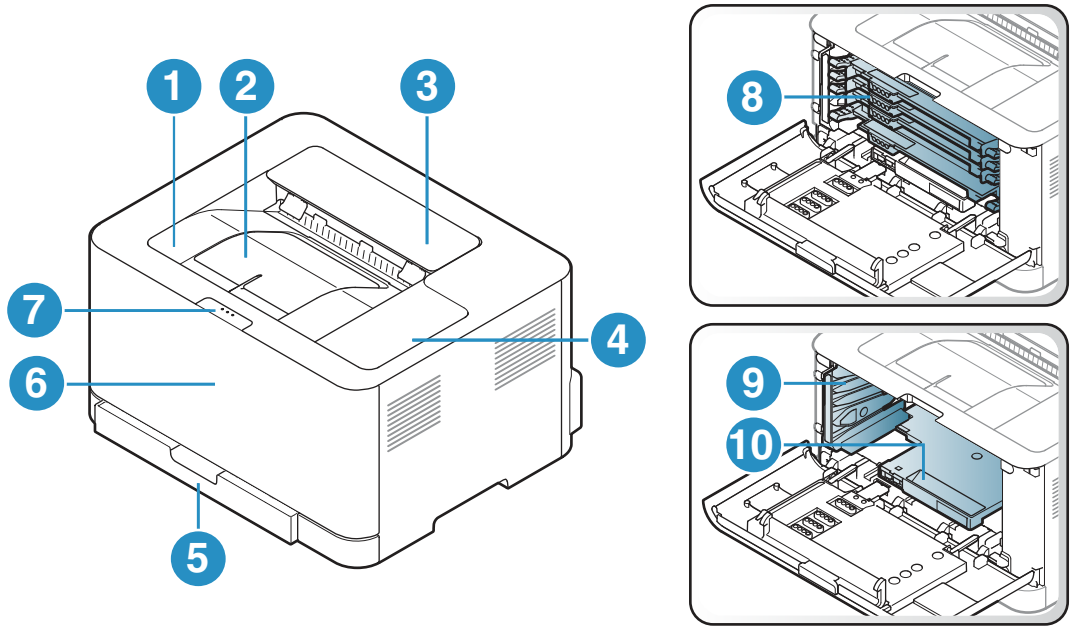

- This illustration may differ from your machine depending on its model.
- Some features and optional goods may not be available depending on model or country (see "Features by model" on page 7).

1	Output tray	6	Front cover
2	Output support	7	Front cover release button
3	Top cover	8	Toner cartridges
4	Control Panel	9	Toner Collection Unit
5	Tray	10	Imaging drum

Rear view

- This illustration may differ from your machine depending on its model.
- Some features and optional goods may not be available depending on model or country (see "Features by model" on page 7).

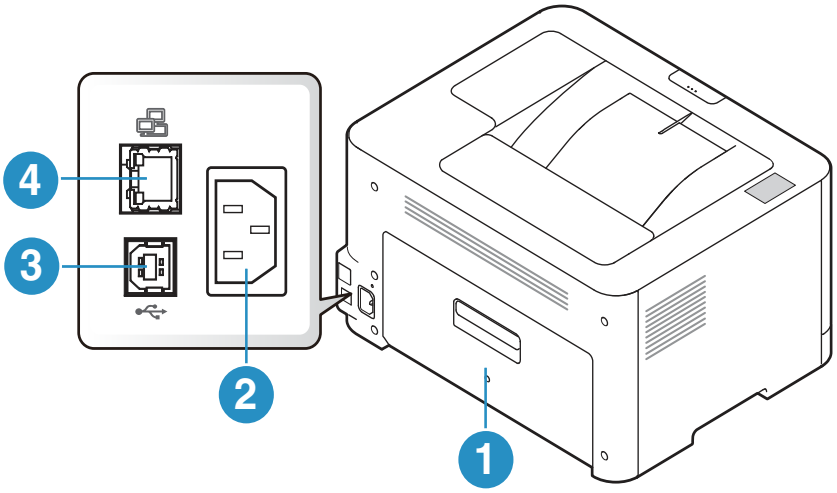

1	Rear cover
2	Power receptacle
3	USB port
4	Network port

Control panel overview

This control panel may differ from your machine depending on its model. There are various types of control panels.

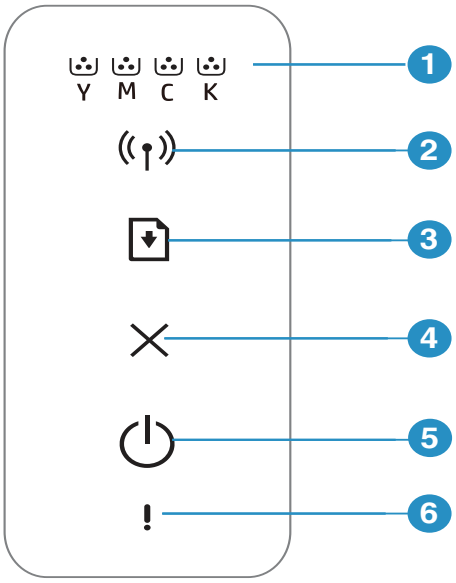

1		Toner LED	Shows the status of the toner (see "Toner LED/ Wireless LED / Power LED" on page 86).
2		**Wireless**	Configures the wireless network connection easily without a computer (see "Wireless network setup" on page 39).
3		**Resume**	• **Configuration sheet** & **Network Configuration sheet** - Press and hold this button for about **10** seconds until the **power** LED blinks slowly, and release. • **Prints supplies info report / error report** - Press and hold this button for about **15** seconds until the blue **power** LED blinks rapidly and release. • **Manual print** - Press this button to print the other side of all pages if you have selected **Double-sided Printing (Manual)** in your driver.
4		**Cancel**	You can stop an operation at any time. • **Cancel print** - Press this button during printing job.
5		**Power**	You can turn the power on or off. You can wake the machine up from the sleep mode with this button.
6		**Attention LED**	Shows the status of your machine (see "Attention LED" on page 86).

Turning on the machine

1 Connect the machine to the electricity supply first.

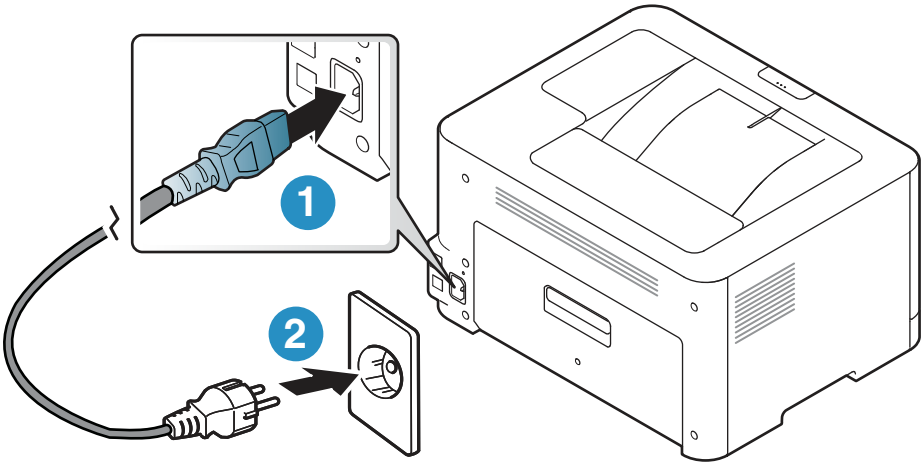

2 press ⏻(**Power**) button on the control panel.

If you want to turn the power off, press ⏻ (**Power**) on the control panel.

Installing the software

After you have set up your machine and connected it to your computer, you must install the printer software. You need to download software packages from the HP website to install the printer software.

Before installing, check whether your computer's OS support the software (see"Operating System" on page 7).

For HP's all-inclusive help for the printer, go to www.hp.com/support/colorlaser150.

Find the following support:

- Install and configure
- Learn and use
- Solve problems
- Download software and firmware updates
- Join support forums
- Find warranty and regulatory information

A locally connected machine is a machine directly attached to your computer using the cable. If your machine is attached to a network, skip the following steps below and go on to installing a network connected machine's driver (see "Installing driver over the network" on page 38).

Only use a USB cable no longer than 3 meters (118 inches).

Learning the Basic Usage

After installation is complete, you may want to set the machine's default settings. Refer to the next section if you would like to set or change values.

- Machine's basic settings 25
- Media and tray 26

Machine’s basic settings

After installation is complete, you may want to set the machine's default settings.

Machine’s default settings

You change the machine’s setting set in the machine from HP Embedded Web Server. If your machine is connected to the network, you can set the machine’s setting from **HP Embedded Web Server** > **Settings** tab > **Machine Settings** (see "Using HP Embedded Web Server" on page 45).

Altitude adjustment

Print quality is affected by atmospheric pressure, which is determined by the height of the machine above sea level. The following information will guide you on how to set your machine for the best print quality.

Before you set the altitude value, determine the altitude where you are.

- **Normal:** 0 ~ 1,000 m (3,280 ft)
- **High 1 :** 1,000 m (3,280 ft) ~ 2,000 m (6,561 ft)
- **High 2:** 2,000 m (6,561 ft) ~ 3,000 m (9,842 ft)
- **High 3:** 3,000 m (9,842 ft) ~ 4,000 m (13,123 ft)
- **High 4:** 4,000 m (13,123 ft) ~ 5,000 m (16,404 ft)

You can set the altitude value from **HP Easy Printer Manager** or **HP Embedded Web Server**.

- If your machine is connected to the local, you can set the machine’s setting from **HP Easy Printer Manager** > **Advanced Setting** > **Device Settings** (see "Using HP Easy Printer Manager" on page 63).
- If your machine is connected to the network, you can set the machine’s setting from **HP Embedded Web Server** > **Settings** tab > **Machine Settings** (see "Using HP Embedded Web Server" on page 45).

Media and tray

This chapter provides information on how to load print media into your machine.

Selecting print media

Always use print media that meets the guidelines for use with your machine.

Guidelines for select the print media

Print media that does not meet the guidelines outlined in this user's guide may cause the following problems:

- Poor print quality
- Increased paper jams
- Premature wear on the machine.

Properties, such as weight, composition, grain, and moisture content, are important factors that affect the machine's performance and the output quality. When you choose print materials, consider the following:

- The type, size, and weight of the print media for your machine are described in print media specifications (see "Print media specifications" on page 105).
- Desired outcome: The print media you choose should be appropriate for your project.
- Brightness: Some print media are whiter than others and produce sharper, more vibrant images.
- Surface smoothness: The smoothness of the print media affects how crisp the printing looks on the paper.

- Some print media may meet all of the guidelines in this user's guide and still not produce satisfactory results. This may be the result of the sheets characteristics, improper handling, unacceptable temperature and humidity levels, or other variables over which cannot be controlled.
- Before purchasing large quantities of print media, ensure that it meets the requirements specified in this user's guide.

- Using print media that does not meet these specifications may cause problems or require repairs. Such repairs are not covered by HP's warranty or service agreements.
- The amount of paper put into the tray may differ according to media type used (see "Print media specifications" on page 105).
- Make sure not to use the inkjet photo paper with this machine. It could cause damage to the machine.
- Using flammable print media can cause a fire.
- Use designated print media (see "Print media specifications" on page 105).

The use of flammable media or foreign materials left in the printer may lead to overheating of the unit and, in rare cases may cause a fire.

The amount of paper put into the tray may differ according to media type used (see "Print media specifications" on page 105).

Tray overview

To change the size, you need to adjust the paper guide.

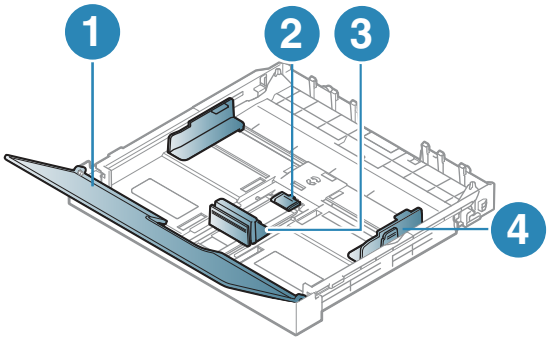

1. Paper cover
2. Guide lock
3. Paper length guide
4. Paper width guide

If you do not adjust the guide, it may cause paper registration, image skew, or jamming of the paper.

Loading paper in the tray

1 Pull out the paper tray (see "Tray overview" on page 27).

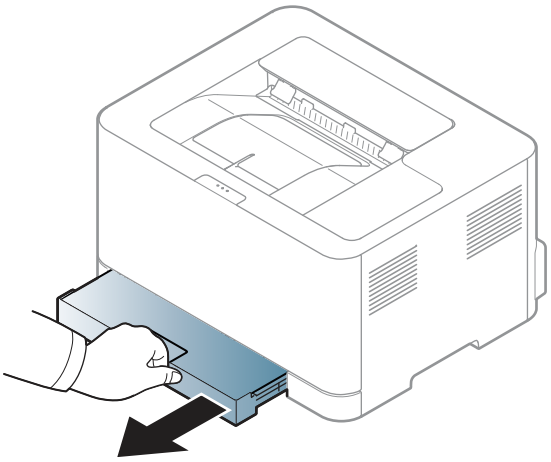

2 Open the paper cover.

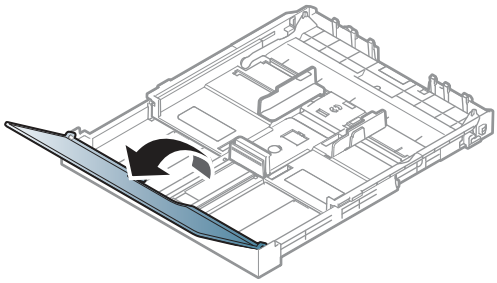

3 Squeeze and the paper width guide and paper length lever to locate them in the correct paper size slot marked at the bottom of the tray to adjust to the size.

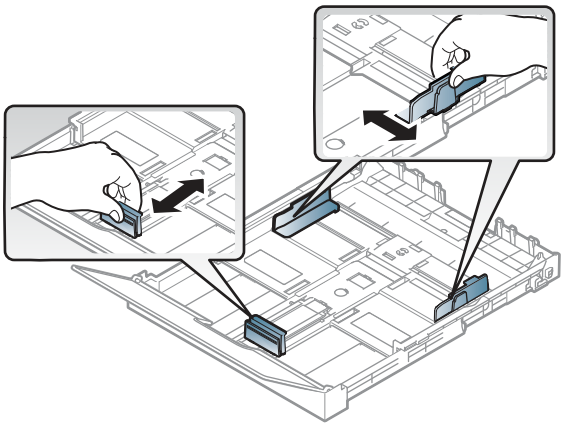

4 Flex or fan the edge of the paper stack to separate the pages before loading papers.

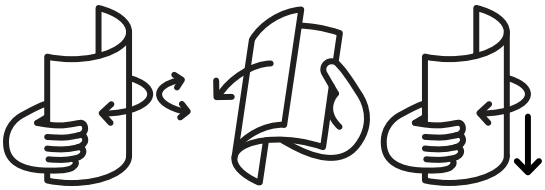

5 Place the paper with the side you want to print facing up.

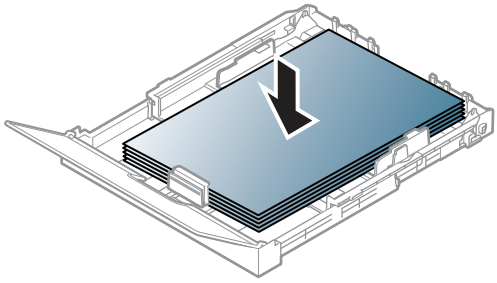

For paper smaller than Letter-sized, press and unlatch the guide lock in the tray, push the tray in manually. Then adjust the paper length guide and paper width guide.

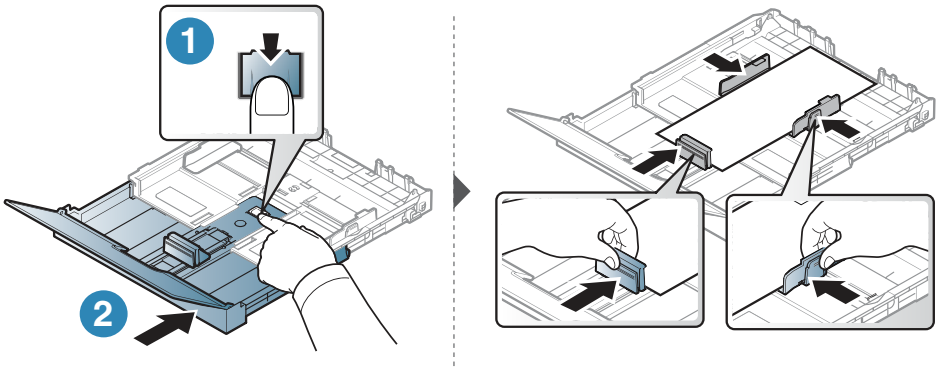

For paper longer than A4-sized(like 'Legal'), press and unlatch the guide lock in the tray, pull the tray out manually. Then adjust the paper length guide and paper width guide.

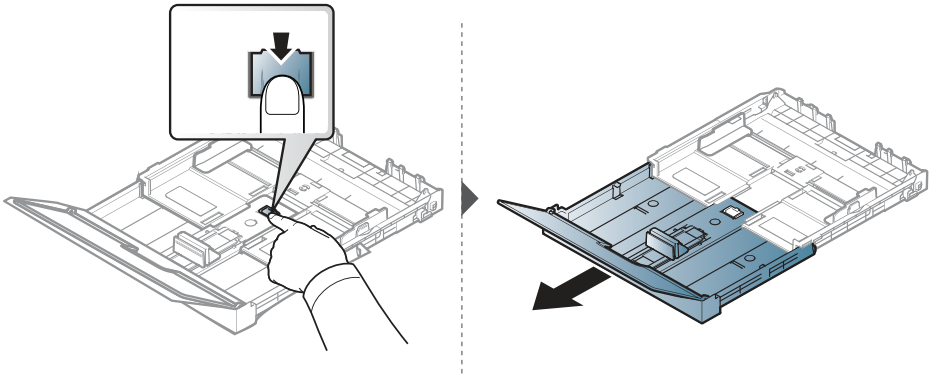

- If you do not adjust the guide, it may cause paper registration, image skew, or jamming of the paper.
- Do not push the paper width guide too far causing the media to warp.
- If you do not adjust the paper width guide, it may cause paper jams.

- Do not use a paper with a leading-edge curl, it may cause a paper jam or the paper can be wrinkled.

6 Squeeze the paper width guide and slide it to the edge of the paper stack without causing it to buckle.

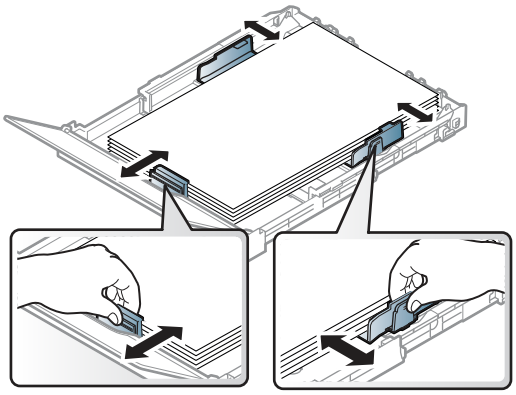

7 Close the paper cover.

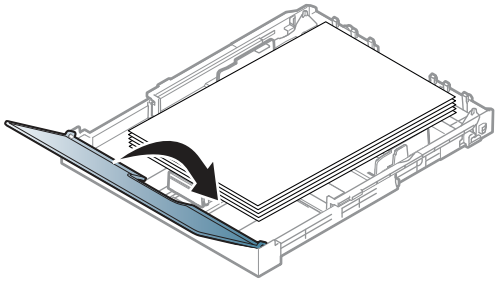

8 Insert the paper tray.

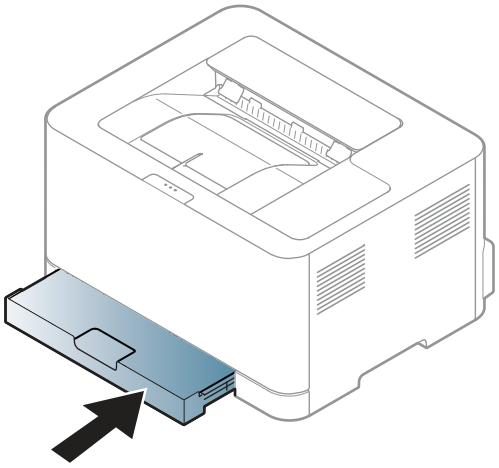

9 When you print a document, set the paper type and size for the tray (see "Setting the paper size and type" on page 34).

The tray is preset to Letter or A4 size, depending on your country. To change the size to A4 or Letter, you must adjust the lever and paper width guide properly.

1 Pull the tray out of the machine. Open the paper cover and remove paper from the tray if necessary.

2 If you want to change the size to Letter, hold the lever at the back of the tray, and rotate the lever clockwise. You can see the lever when you move the paper length guide to the legal-sized paper(LGL).

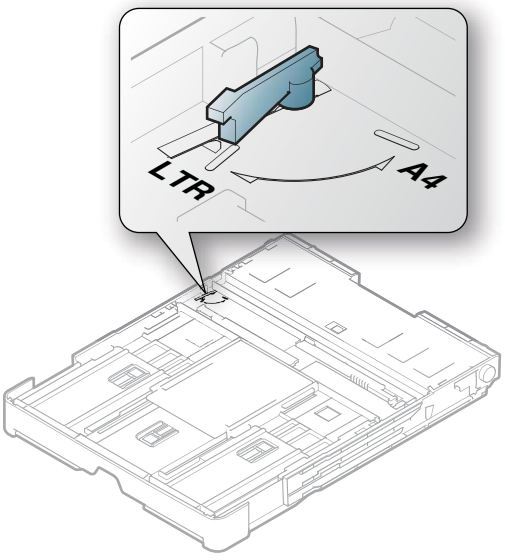

3 Squeeze the paper width guide and slide it to the edge of the lever.

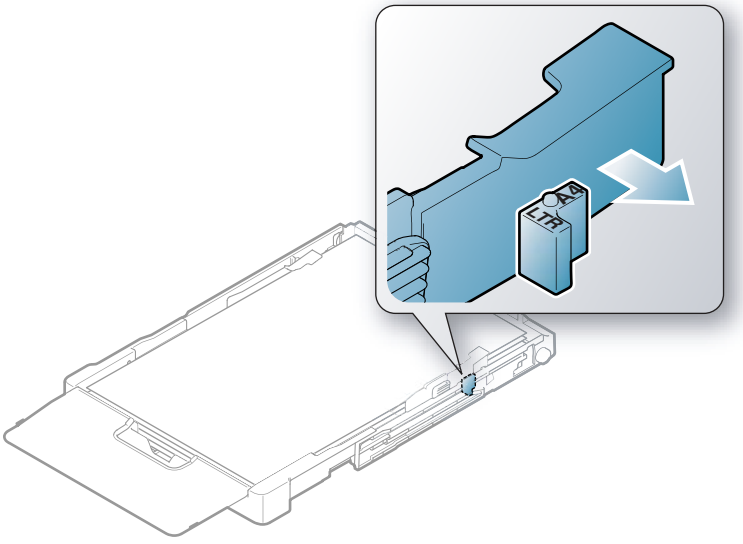

If you want to change the size to A4, first move the paper width guide to left and rotate the lever counterclockwise. If you force the lever, it could damage the tray.

Printing on special media

The table below shows the special media usable in tray.

To change the paper setting set in the machine, from the **Printing preferences** window > **Paper** tab > **Paper Type** (see "Opening printing preferences" on page 55).

When using special media, we recommend you feed one sheet at a time (see "Print media specifications" on page 105).

To see paper weights for each sheet, refer to "Print media specifications" on page 105.

Types	Tray[a]
Plain	●
Heavy 90-120g	●
Light 60-69g	●
Bond	●
Colored	●
X-Hvy 121-163	●
Labels	●
Preprinted	●
Recycled	●
Glossy111-130g	●
Glossy131-175 g	●
Glossy176-220 g	●
HP Matte 120 g	●
HP Matte 150 g	●
HP Matte 200 g	●

a.The paper types available manual feeding in tray.

(●: Supported)

Labels

To avoid damaging the machine, use only labels designed for use in laser printers.

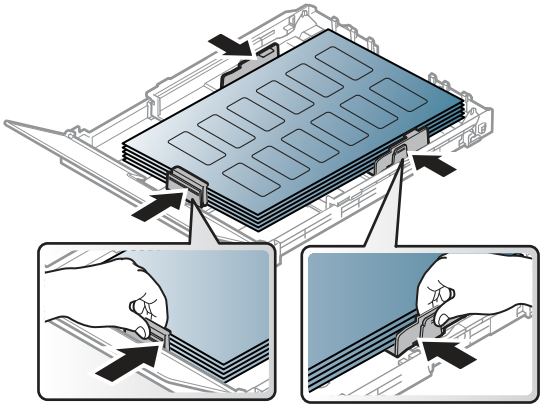

- When selecting labels, consider the following factors:
  - **Adhesives:** Should be stable at your machine's fusing temperature. Check your machine's specifications to view the fusing temperature (about 170°C (338°F)).
  - **Arrangement:** Only use labels with no exposed backing between them. Labels can peel off sheets that have spaces between the labels, causing serious jams.
  - **Curl:** Must lie flat with no more than 5 mm of curl in any direction.
  - **Condition:** Do not use labels with wrinkles, bubbles, or other indications of separation.
- Make sure that there is no exposed adhesive material between labels. Exposed areas can cause labels to peel off during printing, which can cause paper jams. Exposed adhesive can also cause damage to machine components.
- Do not run a sheet of labels through the machine more than once. The adhesive backing is designed for only a single pass through the machine.
- Do not use labels that are separating from the backing sheet or are wrinkled, bubbled, or otherwise damaged.

X-Hvy 121-163/ Custom-sized paper

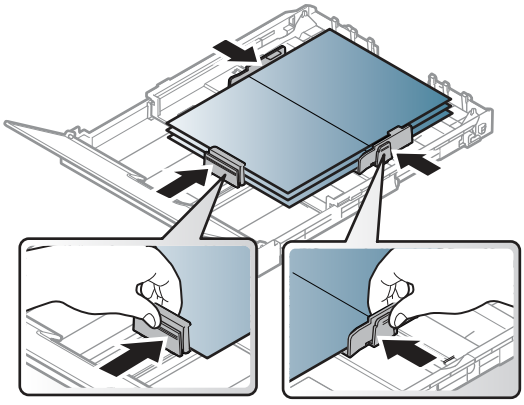

- In the software application, set margins at least 6.4 mm (0.25 inches) away from the edges of the material.

Preprinted paper

When loading preprinted paper, the printed side should be facing up with an uncurled edge at the front. If you experience problems with paper feeding, turn the paper around. Note that print quality is not guaranteed.

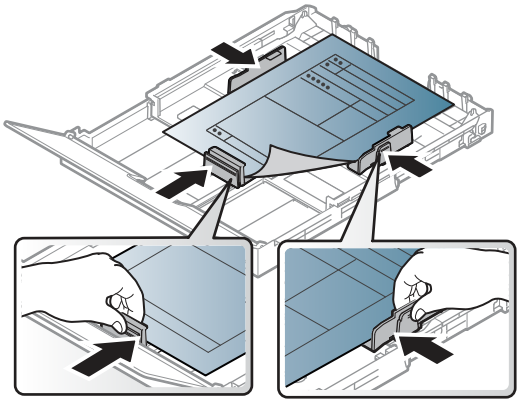

- Must be printed with heat-resistant ink that will not melt, vaporize, or release hazardous emissions when subjected to the machine's fusing temperature for 0.1 second (about 170°C (338°F)).
- Preprinted paper ink must be non-flammable and should not adversely affect machine rollers.
- Before you load preprinted paper, verify that the ink on the paper is dry. During the fusing process, wet ink can come off preprinted paper, reducing print quality.

Setting the paper size and type

After loading paper in the paper tray, set the paper size and type. For computer printing, select the paper size and type in the application program you use on your computer.

To change the paper setting set in the machine, from the **Printing preferences** window > **Paper** tab > **Paper Type** (see "Opening printing preferences" on page 55).

- If you want to use special-sized paper such as billing paper, select **Custom** in the **Paper** tab in the **Printing Preferences** (see "Opening printing preferences" on page 55).
- The paper setting in the machine and driver should match to print without a paper mismatch error. You change the paper setting set in the machine from **HP Easy Printer Manager** or **HP Embedded Web Server**.
  - If your machine is connected to the local, you can set the machine's setting from **HP Easy Printer Manager** > **Advanced Setting** > **Device Settings** (see "Using HP Easy Printer Manager" on page 63).
  - If your machine is connected to the network, you can set the machine's setting from **HP Embedded Web Server** > **Settings** tab > **Machine Settings** (see "Using HP Embedded Web Server" on page 45).

Using a Network-Connected Machine

This chapter gives you step-by-step instructions for setting up a network connected machine and software.

Supported optional devices and features may differ according to your model (see "Features by model" on page 7).

- Wired network setup 36
- Installing driver over the network 38
- Wireless network setup 39
- Using HP Embedded Web Server 45
- HP Smart app 48

Wired network setup

Printing a network configuration report

You can print **Network Configuration Report** from the machine's control panel that will show the current machine's network settings. This will help you to set up a network.

Press the **(Resume)** button for about 10 seconds on the control panel.

Using this **Network Configuration Report**, you can find your machine's MAC address and IP address.

For example:

- MAC Address: 00:15:99:41:A2:78
- IP Address: 169.254.192.192

Setting IP address

First, you have to set up an IP address for network printing and managements. In most cases a new IP address will be automatically assigned by a DHCP (Dynamic Host Configuration Protocol) server located on the network.

When you install the printer driver, do not configure both IPv4 and IPv6. We recommend to configure either IPv4 or IPv6 (see "Installing driver over the network" on page 38).

IPv4 configuration

You can also set the TCP/IPv4 from **Embedded Web Server**. When the **Embedded Web Server** window opens, move the mouse cursor over the **Settings** of the top menu bar and then click **Network Settings** ("Settings tab" on page 46).

IPv6 configuration

IPv6 is supported properly only in Windows Vista or higher.

The machine supports the following IPv6 addresses for network printing and managements.

- **Link-local Address**: Self-configured local IPv6 address (Address starts with FE80).
- **Stateless Address**: Automatically configured IPv6 address by a network router.
- **Stateful Address**: IPv6 address configured by a DHCPv6 server.
- **Manual Address**: Manually configured IPv6 address by a user.

In the IPv6 network environment, follow the next procedure to use the IPv6 address.

Activating IPv6

1 Access a web browser, such as Internet Explorer, from Windows. Enter the machine IP address (http://xxx.xxx.xxx.xxx) in the address field and press the Enter key or click **Go**.

2 If it's your first time logging into **HP Embedded Web Server** you need to log-in as an administrator. Type in the below default **ID** (**admin**). We recommend you to set the default password for security reasons.

3 When the **Embedded Web Server** window opens, move the mouse cursor over the **Settings** of the top menu bar and then click **Network Settings**.

4 Click **TCP/IPv6** on the left pane of the website.

5 Check the **IPv6 Protocol** check box to activate IPv6.

6 Click the **Apply** button.

7 Turn the machine off and turn it on again.

- You can also set the DHCPv6.
- To manually set the IPv6 address:
  Check the **Manual Address** check box. Then, the **Address/Prefix** text box is activated. Enter the rest of the address (e.g.,:3FFE:10:88:194::**AAAA**. "A" is the hexadecimal 0 through 9, A through F).

Installing driver over the network

- Before installing, check whether your computer's OS support the software (see "Operating System" on page 7).
- The machine that does not support the network interface, it will not be able to use this feature (see "Rear view" on page 19).
- You need to download software packages from the HP website to install the printer software. For HP's all-inclusive help for the printer, go to www.hp.com/support/colorlaser150.

Windows

The firewall software might be blocking network communication. Before connecting the device to the network, disable the computer's firewall.

1 Make sure that the machine is connected to the network and powered on. Also, your machine's IP address should have been set (see "Setting IP address" on page 36).

2 Download printer driver software from the HP website (www.hp.com/support/colorlaser150).

3 Turn on the machine.

4 Unzip the driver package and run the driver installer.

5 Follow the instructions in the installation window.

Wireless network setup

Wireless networking may not be available depending on the model (see "Features by model" on page 7).

Wireless networks require higher security, so when an access point is first set up, a network name (SSID), the type of security used, and a Network Password are created for the network. Ask your network administrator about this information before proceeding with the machine installation.

Introducing wireless set up methods

You can set wireless settings either from the machine or the computer. Choose the setting method from the below table.

- Some wireless network installation types may not be available depending on the model or country.
- It is strongly recommended that you set the password on Access Points. If you do not set the password on Access Points, they might be exposed to illegal access from unknown machines including PCs, smart phones and printers. Refer to the Access Point user' guide for password settings.

Set up method	Connecting method	Description & Reference
With Access Point	From the computer	See "Setting up via USB cable" on page 40 for Window.
		See "Access point without a USB cable" on page 41 for Window.
		See "Using a network cable" on page 42.
	From the machine's control panel	See "Using the WPS settings" on page 40.
	From the HP Smart app	See "Connect using the HP Smart app" on page 49.
Wi-Fi Direct setup		See "Setting the Wi-Fi Direct for mobile printing" on page 43.

Restoring the wireless network settings

You can revert the wireless network settings to the default values.

Press and hold the (**Wireless**) button on the control panel for about **20** seconds.

When the **!**(**Attention**) LED and the (**Power**) LED start blinking together, release the (**Wireless**) button.

Using the WPS settings

If your machine and access point (or wireless router) support Wi-Fi Protected Setup™ (WPS), then you can easily configure the wireless network settings through the (**Wireless**) button menu without the need for a computer.

Items to prepare:

- Check if the access point (or wireless router) supports Wi-Fi Protected Setup™ (WPS).
- Check if your machine supports Wi-Fi Protected Setup™ (WPS).

1 Press and hold the (**Wireless**) button on the control panel for at least **3** seconds, and then release the button.
The machine starts connecting to the wireless network.

2 **Within 2 minutes,** press the **WPS (PBC)** button on the access point (or wireless router).
a. The machine is connecting to the access point (or wireless router).
b. When the machine is successfully connected to the wireless network, the LED light stays on.

3 Continue to install the software.

Setup using Windows

Setting up via USB cable

Items to prepare

- Access point
- Network-connected computer
- You need to download software packages from the HP website to install the printer software. For HP's all-inclusive help for the printer, go to www.hp.com/support/colorlaser150.
- A machine installed with a wireless network interface
- USB cable

Creating the infrastructure network

1 Check whether the USB cable is connected to the machine.

2 Turn on your computer, access point, and machine.

3 Download printer driver software from the HP website (www.hp.com/support/colorlaser150).

4 Unzip the driver package and run the driver installer.

5 Review and accept the installation agreements in the installation window. Then, click **Next**.

6 Select **Wireless** on the **Printer Connection Type** screen. Then, click **Next**.

7 On the **Are you setting up your printer for the first time?** screen, select **Yes, I will set up my printer's wireless network.** Then, click **Next**.

If your printer is already connected on the network, select **No, my printer is already connected to my network.**

8 Select **Using a USB cable** on the **Select the Wireless Setup Method** screen. Then, click **Next**.

9 After searching, the window shows the wireless network devices. Select the name (SSID) of the access point you want to use and click **Next**.

10 When the wireless network set up is completed, disconnect the USB cable between the computer and machine. Click **Next**.

11 Select the components to be installed.

12 Follow the instructions in the installation window.

Access point without a USB cable

Items to prepare

- WiFi-enabled PC running Windows 7 or higher and an access point (router)
- You need to download software packages from the HP website to install the printer software. For HP's all-inclusive help for the printer, go to www.hp.com/support/colorlaser150.
- A machine installed with a wireless network interface

While setting the wireless network, the machine uses PC's wireless LAN. You might not be able to connect to the Internet.

Creating the infrastructure network

1 Turn on your computer, access point, and machine.

2 Download printer driver software from the HP website (www.hp.com/support/colorlaser150).

3 Unzip the driver package and run the driver installer.

4 Review and accept the installation agreements in the installation window. Then, click **Next**.

5 Select **Wireless** on the **Printer Connection Type** screen. Then, click **Next**.

6 On the **Are you setting up your printer for the first time?** screen, select **Yes, I will set up my printer's wireless network.** Then, click **Next**.

If your printer is already connected on the network, select **No, my printer is already connected to my network**.

7 Select **Using a direct wireless connection** on the **Select the Wireless Setup Method** screen. Then, click **Next**.

8 When the wireless network set up is completed, click **Next**.

9 Follow the instructions in the installation window.

Using a network cable

See your network administrator, or the person that set up your wireless network, for information about your network configuration.

Your machine is a network compatible machine. To enable your machine to work with your network, you will need to perform some configuration procedures.

Items to prepare

- Access point
- Network-connected computer
- You need to download software packages from the HP website to install the printer software. For HP's all-inclusive help for the printer, go to www.hp.com/support/colorlaser150.
- A machine installed with a wireless network interface
- Network cable

Printing a network configuration report

You can identify the network settings of your machine by printing a network configuration report.

See "Printing a network configuration report" on page 36.

Configuring the machine’s wireless network

Before starting you will need to know the network name (SSID) of your wireless network and the network key if it is encrypted. This information was set when the access point (or wireless router) was installed. If you do not know about your wireless environment, please ask the person who set up your network.

To configure wireless parameters, you can use **HP Embedded Web Server**.

Using HP Embedded Web Server

Before starting wireless parameter configuration, check the cable connection status.

1 Check whether or not the network cable is connected to the machine. If not, connect the machine with a standard network cable.

2 Start a web browser such as Internet Explorer, Safari, or Firefox and enter your machine's new IP address in the browser window.

For example,

3 Click **Login** on the upper right of the **HP Embedded Web Server** website.

4 If it's your first time logging into **HP Embedded Web Server** you need to log-in as an administrator. Type in the below default **ID** (**admin**). We recommend you to set the default password for security reasons.

5 When the **HP Embedded Web Server** window opens, click **Network Settings**.

6 Click **Wi-Fi** > **Wizard**.

7 Select the one **Network Name(SSID)** in the list.

8 Click **Next**.

If the wireless security setting window appears, enter the registered password (network password) and click **Next**.

9 The confirmation window appears, please check your wireless setup. If the setup is right, click **Apply**.

Setting the Wi-Fi Direct for mobile printing

Wi-Fi Direct is a secure and easy-to-use peer-to-peer connection between a Wi-Fi Direct-enabled printer and mobile device.

With Wi-Fi Direct, you can connect your printer to a Wi-Fi Direct network while concurrently connecting to an access point. You can also use a wired network and a Wi-Fi Direct network simultaneously so multiple users can access and print documents both from Wi-Fi Direct and from a wired network.

- You cannot connect your mobile device to the internet through the printer's Wi-Fi Direct.
- The supported protocol list may differ from your model, Wi-Fi Direct networks do NOT support IPv6, network filtering, IPSec, WINS, and SLP services.
- The maximum number of devices that can be connected via Wi-Fi Direct is 4.

Setting up Wi-Fi Direct

If your printer is using a network cable or a wireless access point, you can enable and configure Wi-Fi Direct from HP Embedded Web Server.

1 Access **HP Embedded Web Server** and select **Settings** > **Network Settings** > **Wi-Fi** > **Wi-Fi Direct™**.

2 Enable **Wi-Fi Direct™** and set other options.

Setting up the mobile device

- After setting up Wi-Fi Direct from the printer, refer to the user manual of the mobile device you are using to set its Wi-Fi Direct.
- After setting up Wi-Fi Direct, you need to download the mobile printing application (For example: HP Smart) to print from your smartphone.

- When you have found the printer you want to connect to from your mobile device, select the printer and the printer's LED will blink. Press the Wireless button on the printer and it will be connected to your mobile device. If you don't have Wireless button, press the option you want when the Wi-Fi connection confirmed window appears from the display screen and it will be connected to your mobile device.
- If your mobile device does not support Wi-Fi Direct, you need to enter the "Network Key" of a printer instead of pushing the Wireless button.

Using HP Embedded Web Server

There are several programs available to setup the network settings easily in a network environment. For the network administrator especially, managing several machines on the network is possible.

- Internet Explorer 8.0 or higher is the minimum requirement for HP Embedded Web Server.
- Before using the programs below, set the IP address first.
- Some features and optional goods may not be available depending on model or country (see "Variety feature" on page 9).

HP Embedded Web Server

The web server embedded on your network machine allows you to do the following tasks:

- Check the supplies information and status.
- Customize machine settings.
- Configure the network parameters necessary for the machine to connect to various network environments.

Accessing HP Embedded Web Server

1 Access a web browser, such as Internet Explorer, from Windows.

Enter the machine IP address of your printer (http://xxx.xxx.xxx.xxx) in the address field and press the Enter key or click **Go**.

2 Your machine's embedded website opens.

Logging into HP Embedded Web Server

Before configuring options in HP Embedded Web Server, you need to log-in as an administrator. You can still use HP Embedded Web Server without logging in but you won't have access to **Settings** tab and **Security** tab.

1 Click **Login** on the upper right of the HP Embedded Web Server website.

2 If it's your first time logging into **HP Embedded Web Server** you need to log-in as an administrator. Type in the default **ID** (**admin**). Default password is your printer's PIN number. You can verify the PIN after printing a network configuration report (see "Printing a network configuration report" on page 36).
We recommend you to set the default password for security reasons. You can change your ID and password from **Security** > **System Security** > **System Administrator**.

HP Embedded Web Server overview

Some tabs may not appear depending on your model.

Information tab

This tab gives you general information about your machine. You can check things, such as remaining amount of toner. You can also print reports, such as an error report.

- **Active Alerts:** Shows the alerts that have occurred in the machine and their severity.
- **Supplies:** Shows how many pages are printed and amount of toner left in the cartridge.
- **Usage Counters:** Shows the usage count by print types: simplex and duplex.
- **Current Settings:** Shows the machine's and network's information.
- **Print information:** Prints reports such as system related reports, e-mail address, and font reports.
- **Security Information:** Shows the machine's security information.

Settings tab

This tab allows you to set configurations provided by your machine and network. You need to log-in as an administrator to view this tab.

- **Machine Settings tab:** Sets options provided by your machine.
- **Network Settings tab:** Shows options for the network environment. Sets options such as TCP/IP and network protocols.

Security tab

This tab allows you to set system and network security information. You need to log-in as an administrator to view this tab.

- **System Security:** Sets the system administrator's information and also enables or disables machine features.
- **Network Security:** Sets settings for IPv4/IPv6 filtering.

Maintenance tab

This tab allows you to maintain your machine by upgrading firmware and setting contact information for sending emails. You can also connect to HP website or download drivers by selecting the **Link** menu.

- **Firmware Upgrade:** Upgrade your machine's firmware.
- **Contact Information:** Shows the contact information.
- **Link:** Shows links to useful sites where you can download or check information.

Setting the system administrator's information

Some menus may not appear in the display depending on options or models. If so, it is not applicable to your machine.

1 Start a web browser, such as Internet Explorer, from Windows.

Enter the machine IP address (http://xxx.xxx.xxx.xxx) in the address field and press the Enter key or click **Go**.

2 Your machine's embedded website opens.

3 From the **Security** tab, select **System Security** > **System Administrator**

4 Enter the name of the administrator, phone number and location.

5 Click **Apply**.

HP Smart app

HP Smart helps you to set up, scan, print, share, and manage your HP printer. You can share documents and images through email, text messages, and popular cloud and social media services (such as iCloud, Google Drive, Dropbox, and Facebook). You can also set up new HP printers, as well as monitor and order supplies.

The HP Smart app might not be available in all languages. Some features might not be available with all printer models.

- **To install the HP Smart app :** The HP Smart app is supported on iOS, Android, and Windows 10 devices. To install the app on your device, go to 123.hp.com and follow the onscreen instructions to access your device's app store.
- **To open the HP Smart app on a Windows 10 computer :** After installing the HP Smart app, from the device desktop, click **Start**, and then select **HP Smart** from the app list.
- **Connect to printer :** Make sure that the printer is turned on and is connected to the same network as your device. Then HP Smart will automatically detect the printer.
- **Get more information about the HP Smart app :** For basic instructions on how to print, scan, and troubleshoot using HP Smart.
  - See "Print using the HP Smart app" on page 50.
  - See "Scan using the HP Smart app" on page 51.
  - See "Get help from the HP Smart app" on page 51.

  For more information about using HP Smart for printing, scanning, accessing printer features, and troubleshooting issues, go to:
  - **iOS/Android:** www.hp.com/go/hpsmart-help
  - **Windows:** www.hp.com/go/hpsmartwin-help

Connect using the HP Smart app

You can use the HP Smart app to set up the printer on your wireless network. The HP Smart app is supported on iOS, Android, and Windows devices.

1. Make sure your computer or mobile device is connected to your wireless network and you know the password of your wireless network.

2. Check if the printer is in the Auto Wireless Connect (AWC) setup mode.

   If this is the first time you set up the printer, the printer is ready for setup after the printer is powered on. It keeps searching for the HP Smart app to connect within **2** hours, and then stops searching.

   To put the control panel to the Auto Wireless Connect (AWC) setup mode, press and hold the (**Wireless**) button for at least **20** seconds until the (**Attention**) and the (**Power**) LED start blinking together.

3. Open the HP Smart app, and then do one of the following:

   - **Windows:** On the home screen, click or tap **Find Printer**. If the printer is not found, click or tap **Set up a new printer**. Follow the onscreen instructions to add the printer to your network.
   - **iOS/Android:** On the home screen, tap the Plus icon and then select the printer. If the printer is not in the list, tap **Add a new printer**. Follow the onscreen instructions to add the printer to your network.

Change the default printer setting the HP Smart app

You can set the printer setting from HP Smart app.

1. Open the HP Smart app.
2. Tap the Plus icon if you need to change to a different printer, or add a new printer.
3. Tap **Printer Settings**.
4. Select the option you want, and then change the setting.

Print using the HP Smart app

This section provides basic instructions for using the HP Smart app to print from your Android, iOS, or Windows 10 device.

To print from an Android or iOS device

1. Open the HP Smart app.
2. Tap the Plus icon if you need to change to a different printer, or add a new printer.
3. Tap a printing option.
4. Select the photo or document you want to print.
5. Tap **Print**.

To print from a Windows 10 device

1. Load paper in the tray (see "Loading paper in the tray" on page 28).
2. Open HP Smart.
3. On the HP Smart Home screen, make sure your printer is selected.

   If you want to select a different printer, click or tap the Printer icon on the toolbar at the left side of the screen, and then select **Select a Different Printer** to view all available printers.

4. At the bottom of the Home screen, click or tap **Print**.
5. Select **Print Photo**, locate a photo you want to print, and then click or tap **Select Photos** to Print.

   Select **Print Document**, locate a PDF document you want to print, and then click or tap **Print**.
6. Select the appropriate options.
7. Click or tap **Print** to begin printing.

Scan using the HP Smart app

You can use the HP Smart app to scan documents or photos using your device camera. HP Smart includes editing tools that allow you to adjust the scanned image before saving or sharing. You can print, save your scans locally or in cloud storage, and share them via email, SMS, Facebook, Instagram, etc.

To scan from an Android or iOS device

1. Open the HP Smart app.
2. Tap the Plus icon if you need to change to a different printer, or add a new printer.
3. Select a scan option, and then tap **Camera**. The built-in camera will open. Scan your photo or document using the camera.
4. When you have finished adjusting the scanned document or photo, save, share, or print it.

To scan from a Windows 10 device

To scan a document or photo using the device camera

If your device has a camera, you can use the HP Smart app to scan a printed document or photo with the device camera. You can then use HP Smart to edit, save, print or share the image.

1. Open HP Smart.
2. Select **Scan** > **Camera**.
3. Put a document or photo in front of the camera, it take an image. If necessary, change the scan option by pressing the **Apply**.
4. Select the file type you want
5. Click or tap the **Save** or **Share** icon.

To edit a previously scanned document or photo

HP Smart provides editing tools, such as crop or rotate, so that you can use to adjust a previously scanned document or photo on your device.

1. Open HP Smart.
2. Select **Scan** > **Import**.
3. Select the document or photo that you want to adjust, and then click or tap **Open**. If necessary, change the scan option by pressing the **Apply**.
4. Select the file type you want
5. Click or tap the **Save** or **Share** icon.

Get help from the HP Smart app

The HP Smart app provides alerts for printer issues (jams and other problems), links to help content, and options to contact support for additional assistance.

Printing

This chapter provides information about the overall print options. This section is mainly based on Windows 7.

You need to download software packages from the HP website to install the printer software. For HP's all-inclusive help for the printer, go to **www.hp.com/support**> select your country and region > find your product.

- Basic Print 53
- Canceling a print job 54
- Opening printing preferences 55
- Using a favorite setting 56
- Using help 57
- Printing features 58
- Using HP Easy Printer Manager 63
- Using Printer Status programs 66

Basic Print

Before printing, check whether your computer's OS support the software (see "Operating System" on page 7).

The following **Printing Preferences** window is for Notepad in Windows 7. Your **Printing Preferences** window may differ, depending on your operating system or the application you are using.

1 Open the document you want to print.

2 Select **Print** from the **File** menu.

3 Select your machine from the **Select Printer** list.

4 The basic print settings including the number of copies and print range are selected within the **Print** window.

To take advantage of the advanced printing features, click **Properties** or **Preferences** from the **Print** window (see "Opening printing preferences" on page 55).

5 To start the print job, click **OK** or **Print** in the **Print** window.

Canceling a print job

If the print job is waiting in the print queue or print spooler, cancel the job as follows:

- You can access this window by simply double-clicking the machine icon ( ) in the Windows task bar.
- You can also cancel the current job by pressing (**Cancel**) on the control panel.

Opening printing preferences

- The **Printing Preferences** window that appears in this user's guide may differ depending on the machine in use.
- When you select an option in **Printing Preferences**, you may see a warning mark ⊗ or ⚠. An ⚠ mark means you can select that certain option but it is not recommended, and an ⊗ mark means you cannot select that option due to the machine's setting or environment.

1 Open the document you want to print.

2 Select **Print** from the file menu. The **Print** window appears.

3 Select your machine from the **Select Printer**.

4 Click **Properties** or **Preferences**. Click or tap the tabs in the print driver to configure the available options.

- In Windows 10, 8.1, and 8, these applications will have a different layout with different features from what is described below for desktop applications. To access the print feature from a **Start** screen app, complete the following steps:
  - **Windows 10:** Select **Print**, and then select the printer.
  - **Windows 8.1 or 8:** Select **Devices**, select **Print**, and then select the printer.
- You can check the machine's current status pressing the **Printer Status** button (see "Using Printer Status programs" on page 66).

Using a favorite setting

The **Favorites** option, which is visible on each preferences tab except for the **HP** tab, allows you to save the current preferences for future use.

To save a **Favorites** item, follow these steps:

1. Change the settings as needed on each tab.
2. Enter a name for the item in the **Favorites** input box.
3. Click **Save**.
4. Enter name and description, and then select the desired icon.
5. Click **OK**. When you save **Favorites**, all current driver settings are saved.

To use a saved setting, select it in the **Favorites** tab. The machine is now set to print according to the settings you have selected. To delete saved settings, select it in the **Favorites** tab and click **Delete**.

Using help

Click the option you want to know on the **Printing Preferences** window and press **F1** on your keyboard.

Printing features

- This feature may not be available depending on model or optional goods (see "Features by model" on page 7).
- You need to download software packages from the HP website to install the printer software. For HP's all-inclusive help for the printer, go to www.hp.com/support/colorlaser150.

Understanding special printer features

You can use advanced printing features when using your machine.

To take advantage of the printer features provided by your printer driver, click **Properties** or **Preferences** in the application's **Print** window to change the print settings. The machine name that appears in the printer properties window may differ depending on the machine in use.

- Some menus may not appear on the display depending on options or models. If so, it is not applicable to your machine.
- Select the **Help** menu or click the ? button from the window or press **F1** on your keyboard and click on any option you want to know about (see "Using help" on page 57).

Item	Description
Multiple Pages per Side 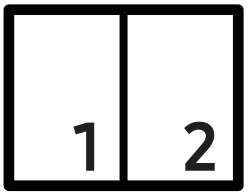	Selects the number of pages to print on a single sheet of paper. To print more than one page per sheet, the pages will be reduced in size and arranged in the order you specify. You can print up to 16 pages on one sheet.
Poster Printing 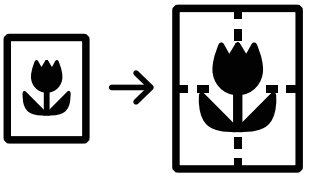	Prints a single-page document onto 4 (Poster 2x2), 9 (Poster 3x3), or 16 (Poster 4x4) sheets of paper, for the purpose of pasting the sheets together to form one poster-size document. Select the **Poster Overlap** value. Specify **Poster Overlap** in millimeters or inches by selecting the radio button on the upper right of **Basic** tab to make it easier to paste the sheets together. 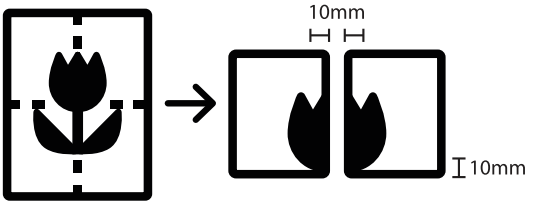

Item	Description
Booklet Printing 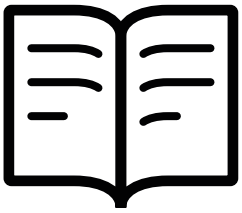	Prints your document on both sides of a sheet of paper and arranges the pages so that the paper can be folded in half after printing to produce a booklet. • The **Booklet Printing** option is not available for all paper sizes. Select the available paper **Size** option under the **Paper** tab to see what paper sizes are available. • If you select an unavailable paper size, this option can be automatically canceled. Select only available paper (paper without ⚠ or ⊗ mark).
Double-sided Printing (Manual)	Print on both sides of a sheet of paper (duplex). Before printing, decide how you want your document oriented. • If your machine does not have a duplex unit, you should complete the printing job manually. The machine prints every other page of the document first. After that, a message appears on your computer. • **Skip Blank Pages** feature does not work when you select the duplex option. • **None:** Disables this feature. • **Long Edge:** This option is the conventional layout used in bookbinding. 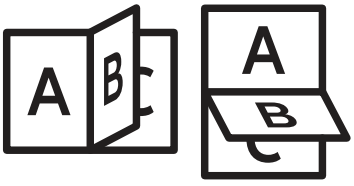 • **Short Edge:** This option is the conventional layout used in calendars. 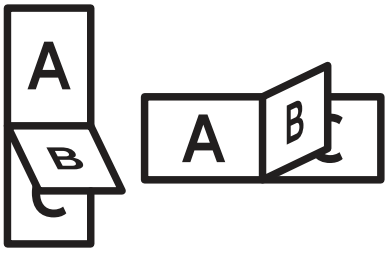
Paper Options 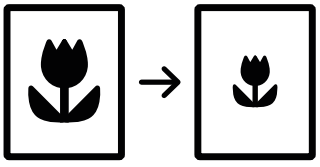	Changes the size of a document to appear larger or smaller on the printed page by entering in a percentage by which to enlarge or decrease the document.

Item	Description
Watermark 	The watermark option allows you to print text over an existing document. For example, you use it when you want to have large gray letters reading “**DRAFT**” or “**CONFIDENTIAL**” printed diagonally across the first page or all pages of a document.
Watermark (Creating a watermark)	a. To change the print settings from your software application, access **Printing Preferences** (see "Opening printing preferences" on page 55). b. From the **Advanced** tab, select **Edit...** from the **Watermark** drop-down list. c. Enter a text message in the **Watermark Message** box. You can enter up to 256 characters. When the **First Page Only** box is checked, the watermark prints on the first page only. d. Select watermark options. You can select the font name, style, size, and shade from the **Font Attributes** section, as well as set the angle of the watermark from the **Watermark Alignment and Angle** section. e. Click **Add** to add a new watermark to the **Current Watermarks** list. f. When you finish editing, click **OK** or **Print** until you exit the **Print** window.
Watermark (Editing a watermark)	a. To change the print settings from your software application, access **Printing Preferences** (see "Opening printing preferences" on page 55). b. Click the **Advanced** tab, select **Edit...** from the **Watermark** drop-down list. c. Select the watermark you want to edit from the **Current Watermarks** list and change the watermark message and options. d. Click **Update** to save the changes. e. Click **OK** or **Print** until you exit the **Print** window.
Watermark (Deleting a watermark)	a. To change the print settings from your software application, access **Printing Preferences**. b. Click the **Advanced** tab, select **Edit...** from the **Watermark** drop-down list. c. Select the watermark you want to delete from the **Current Watermarks** list and click **Delete**. d. Click **OK** or **Print** until you exit the **Print** window.

Item	Description
Overlay 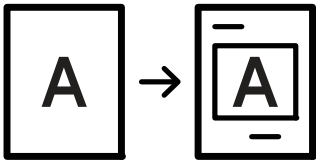	An overlay is text and/or images stored in the computer hard disk drive (HDD) as a special file format that can be printed on any document. Overlays are often used to take the place of letterhead paper. Rather than using preprinted letterhead, you can create an overlay containing exactly the same information that is currently on your letterhead. To print a letter with your company's letterhead, you do not need to load preprinted letterhead paper in the machine: just print the letterhead overlay on your document. To use a page overlay, you must create a new page overlay containing your logo or image. • The overlay document size must be the same as the document you print with the overlay. Do not create an overlay with a watermark. • The resolution of the overlay document must be the same as that of the document you will print with the overlay.
Overlay (Creating an overlay)	a. Create or open a document containing text or an image for use in a new page overlay. Position the items exactly as you wish them to appear when printed as an overlay. b. To save the document as an overlay, access **Printing Preferences**. c. Click the **Advanced** tab, and select **Create** from the **Overlay** drop-down list. d. In the **Save As** window, type a name up to eight characters in the **File name** box. Select the destination path, if necessary (The default is C:\Formover). e. Click **Save**. f. Click **OK** or **Print** until you exit the **Print** window. When a confirming message window appears, click **Yes**. g. The file is not printed. Instead, it is stored on your computer hard disk drive.

Item	Description
Overlay (Using a page overlay)	a. Create or open the document you want to print. b. To change the print settings from your software application, access **Printing Preferences**. c. Click the **Advanced** tab. d. Select the **Print Overlay** from the **Overlay** drop-down list. e. If the overlay file you want does not appear in the **Overlay File 1** or **Overlay File 2** drop-down list, select **Load** from the **Overlay List**. Select the overlay file you want to use. If you have stored the overlay file you want to use in an external source, you can also load the file when you access the **Load** window. After you select the file, click **Open**. The file appears in the **Overlay List** box and is available for printing. Select the overlay from the **Overlay List** box. f. If necessary, check **Confirm Page Overlay When Printing** box. If this box is checked, a message window appears each time you submit a document for printing, asking you to confirm your wish to print an overlay on your document. If this box is not checked and an overlay has been selected, the overlay automatically prints with your document. g. Click **OK** or **Print** until you exit the **Print** window. The selected overlay prints on your document.
Overlay (Deleting a page overlay)	a. In the **Printing Preferences** window, click the **Advanced** tab. b. Select **Edit** in the **Text** drop down list. c. Select the overlay you want to delete from the **Overlay List** box. d. Click **Delete**. e. When a confirming message window appears, click **Yes**. f. Click **OK** or **Print** until you exit the **Print** window. You can delete page overlays that you no longer use.

Using HP Easy Printer Manager

For Windows, Internet Explorer 6.0 or higher is the minimum requirement for HP Easy Printer Manager.

HP Easy Printer Manager is an application that combines HP machine settings into one location. HP Easy Printer Manager combines device settings as well as printing environments, settings/actions and launching. All of these features provide a gateway to conveniently use your HP machine. HP Easy Printer Manager provides two different user interfaces for the user to choose from: the basic user interface and the advanced user interface. Switching between the two interfaces is easy: just click a button.

Understanding HP Easy Printer Manager

To open the program:

For Windows,

Select **Start** > **Programs** or **All Programs** > **HP Printers** > **HP Easy Printer Manager**.

- For Windows 8
  From the **Charms**, select **Search** > **Apps** > **HP Printers** > **HP Printer Manager**.
- For Windows 10 / Windows Server 2016
  From task bar, type in **HP Printers** in **Search** input area. Press the enter key and then select **HP Printer Manager**.
  OR
  From the **Start**( ) icon, select **All apps** > **HP Printers** > **HP Printer Manager**.

The screenshot may differ depending on operating system, model, or options.

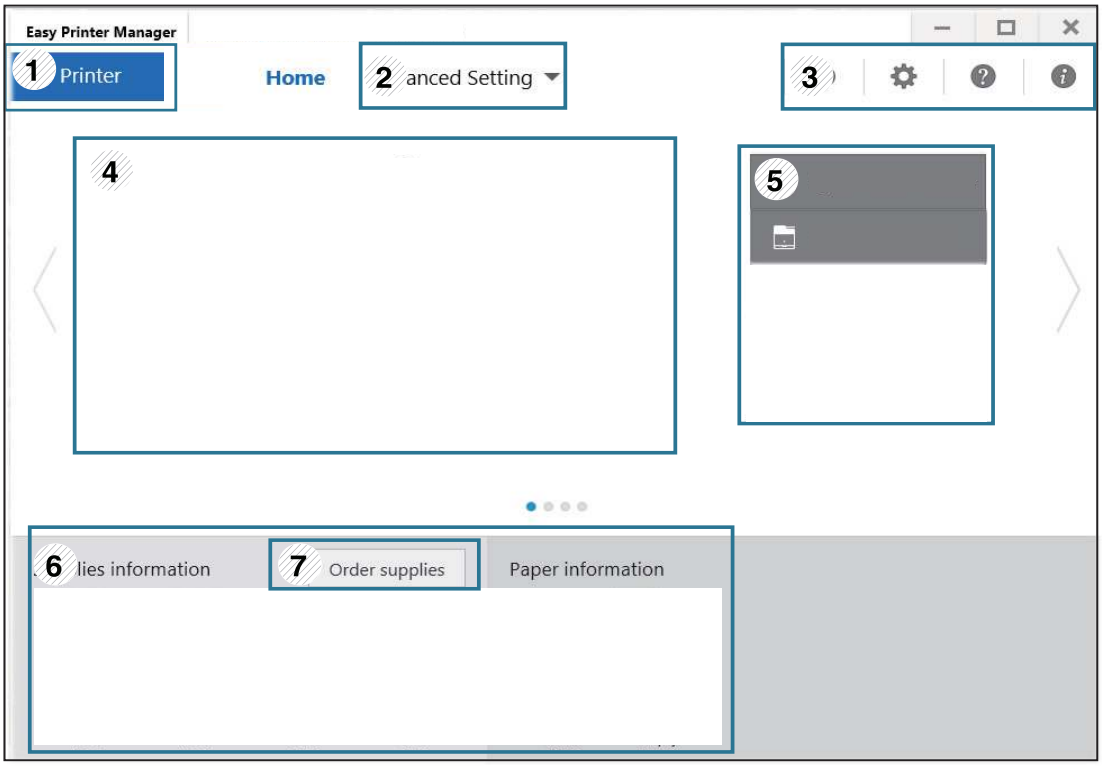

1	Printer list	The Printer List displays printers installed on your computer and network printers added by network discovery.
2	Advanced Setting	The advanced user interface is intended to be used by the person responsible for managing the network and machines. Some menus may not appear in the display depending on options or models. If so, it is not applicable to your machine. • **Device Settings:** You can configure various machine settings such as machine setup, paper, layout, emulation, network, and print information. If you connect your machine to a network, the **HP Embedded Web Server** icon is enabled. • **Alert Settings:** This menu includes settings related to error alerting. - **Printer Alert:** Provides settings related to when alerts will be received. - **Email Alert:** Provides options relating to receiving alerts via email. - **Alert History:** Provides a history of device and toner related alerts.
3	Application information	Includes links for changing to the refresh, preference setting, help, and about.
4	Printer information	This area gives you general information about your machine. You can check information, such as the machine's model name, IP address (or Port name), and machine status.

5	**Quick links**	Displays **Quick links** to machine specific functions. This section also includes links to applications in the advanced settings.
6	**Contents area**	Displays information about the selected machine, remaining toner level, and paper. The information will vary based on the machine selected. Some machines do not have this feature.
7	**Order supplies**	Click on the **Order** button from the supply ordering window. You can order replacement toner cartridge(s) from online.

Select the **Help** menu from the window and click on any option you want to know about.

Using Printer Status programs

The Printer Status is a program that monitors and informs you of the machine status.

- The Printer Status window and its contents shown in this user's guide may differ depending on the machine or operating system in use.
- Check the operating system(s) that are compatible with your machine (see "System requirements" on page 108).
- Available for Windows OS users only.

Printer Status overview

If an error occurs while operating, you can check the error from the Printer Status. Printer Status is installed automatically when you install the machine software.

You can also launch Printer Status manually. Go to the **Printing Preferences**, click the tab except for the **HP** tab > **Printer Status** button. The **Favorites** option, which is visible on each preferences tab except for the **HP** tab

These icons appear on the Windows task bar:

Icon	Mean	Description
	Normal	The machine is in ready mode and experiencing no errors or warnings.
	Warning	The machine is in a state where an error might occur in the future. For example, it might be in toner low status, which may lead to toner empty status.
	Error	The machine has at least one error.

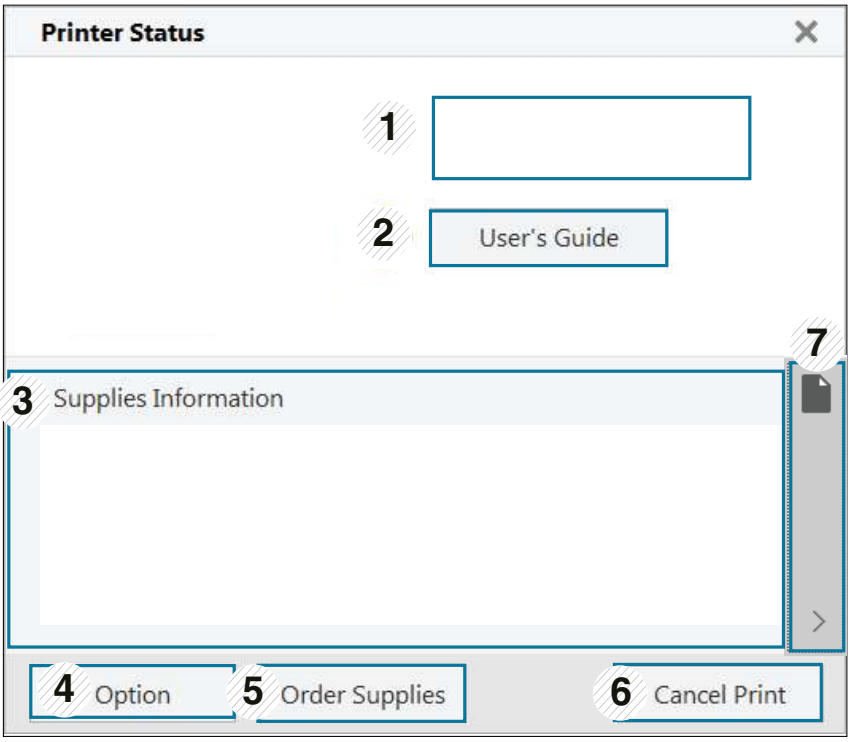

1	**Device Information**	You can see the device status, current printer model name, connected port name in this area.
2	**User's Guide**	User's Guide is disabled. You can download User's Guide in www.hp.com/support/colorlaser150.
3	**Supplies Information**	You can view the percentage of toner remaining in each toner cartridge. The machine and the number of toner cartridge(s) shown in the above window may differ depending on the machine in use. Some machines do not have this feature.
4	**Option**	You can set printing job alert related settings.
5	**Order Supplies**	You can order replacement toner cartridge(s) from online.
6	**Cancel Print** or **Close**	• **Cancel Print :** If print job is waiting in the print queue or printer, cancel all user's print jobs in the print queue or the printer. • **Close :** Depending on the status of the machine or the supported functions, the **Close** button may appear to close the status window.
7	**Toner/Paper Information**	This button areas for paper and toner info will be available based on the device.

Maintenance

This chapter provides information about purchasing supplies, accessories and maintenance parts available for your machine.

- Ordering supplies and accessories 69
- Available supplies 70
- Available maintenance parts 72
- Storing the toner cartridge 73
- Redistributing toner 75
- Replacing the toner cartridge 76
- Replacing the toner collection unit 77
- Replacing the imaging drum 78
- Cleaning the machine 80

Ordering supplies and accessories

Available accessories may differ from country to country. Contact your sales representatives to obtain the list of available supplies, and maintenance parts.

To order HP-authorized supplies, accessories, and maintenance parts, contact your local HP dealer or the retailer where you purchased your machine. You can also visit https://store.hp.com/, and then select your country/region to obtain the contact information for service.

Available supplies

When supplies reach the end of their life spans, you can order the following types of supplies for your machine:

Item	Product name	Cartridge number	Product number	Region[a]
Toner cartridge	HP 116A Original Laser Toner Cartridge	116A Black	W2060A	For use only in North America, Latin America
		116A Cyan	W2061A	
		116A Yellow	W2062A	
		116A Magenta	W2063A	
	HP 117A Original Laser Toner Cartridge	117A Black	W2070A	For use only in Europe, Russia, CIS, Mid East and Africa
		117A Cyan	W2071A	
		117A Yellow	W2072A	
		117A Magenta	W2073A	
	HP 118A Original Laser Toner Cartridge	118A Black	W2080A	For use only in China
		118A Cyan	W2081A	
		118A Yellow	W2082A	
		118A Magenta	W2083A	
	HP 119A Original Laser Toner Cartridge	119A Black	W2090A	For use only in Asia Pacific excluding China
		119A Cyan	W2091A	
		119A Yellow	W2092A	
		119A Magenta	W2093A	
Imaging Drum	HP 120A Original Laser Imaging Drum	120A	W1120A	For use in all countries excluding China
	HP 132A Original Laser Imaging Drum	132A	W1132A	For use only in China
Toner Collection Unit	HP Laser Toner Collection Unit		5KZ38A	For use in all countries excluding China
			5LX86A	For use only in China

a.When purchasing new toner cartridges or other supplies, these must be purchased in the same country as the machine you are using. Otherwise, new toner cartridges or other supplies will be incompatible with your machine due to different configurations of toner cartridges and other supplies according to the specific country conditions.

Depending on the options, percentage of image area, and job mode used, the toner cartridge's lifespan may differ.

HP does not recommend using non-genuine HP toner cartridge such as refilled or remanufactured toner. HP cannot guarantee non-genuine HP toner cartridge's quality. Service or repair required as a result of using non-genuine HP toner cartridges will not be covered under the machine’s warranty.

Available maintenance parts

You need to replace the maintenance parts at specific intervals to keep the machine in the best condition and avoid print quality and paper feeding problems resulting from the worn-out parts. Maintenance parts are mostly rollers, belts and pads. However, the replacement period and parts may differ depending on the model. Replacing maintenance parts can be performed only by an authorized service provider, dealer, or the retailer where you bought the machine. To purchase maintenance parts, contact the retailer where you bought the machine. The replacement period for the maintenance parts is informed by the "HP Printer Status" program. Or on the UI (User Interface) if your machine supports a display screen. The replacement period varies based on the operating system used, computing performance, application software, connecting method, paper type, paper size, and job complexity.

Storing the toner cartridge

Toner cartridges contain components that are sensitive to light, temperature and humidity. HP suggests users follow these recommendations to ensure optimal performance, highest quality, and longest life from your new HP toner cartridge.

Store this cartridge in the same environment in which the printer will be used. This should be in controlled temperature and humidity conditions. The toner cartridge should remain in its original and unopened package until installation – if original packaging is not available, cover the top opening of the cartridge with paper and store in a dark cabinet.

Opening the cartridge package prior to use dramatically shortens its useful shelf and operating life. Do not store on the floor. If the toner cartridge is removed from the printer, follow the instructions below to store the toner cartridge properly.

- Store the cartridge inside the protective bag from the original package.
- Store lying flat (not standing on end) with the same side facing up as if it were installed in the machine.
- Do not store consumables in any of the following conditions:
  - Temperature greater than 40°C (104°F)
  - Humidity range less than 20% and greater than 80%
  - An environment with extreme changes in humidity or temperature
  - Direct sunlight or room light
  - Dusty places
  - A car for a long period of time
  - An environment where corrosive gases are present
  - An environment with salty air

Handling instructions

- Do not touch the surface of the photoconductive drum in the cartridge.
- Do not expose the cartridge to unnecessary vibrations or shock.
- Never manually rotate the drum, especially in the reverse direction; this can cause internal damage and toner spillage.

Toner cartridge usage

HP does not recommend or approve the use of non-HP brand toner cartridges in your printer including generic, store brand, refilled, or remanufactured toner cartridges.

HP's printer warranty does not cover damage to the machine caused by the use of a refilled, remanufactured, or non-HP brand toner cartridges.

Estimated cartridge life

Estimated cartridge life depends on the amount of toner that print jobs require. The actual print yield may vary depending on the print density of the pages you print on, operating environment, percentage of image area, printing interval, media type and/or media size. For example, if you print a lot of graphics, the consumption of the toner is higher and you may need to change the cartridge more often.

Redistributing toner

You can temporarily improve print quality by redistributing the remaining toner in the cartridge. In some cases, white streaks or light printing will still occur even after you have redistributed the toner.

- Illustrations on this user's guide may differ from your machine depending on its options or models. Check your machine type (see "Front view" on page 19).

- Before opening the front cover, close the output support first.
- Do not use sharp objects such as a knife or scissors to open the toner cartridge package.
- If toner gets on your clothing, wipe it off with a dry cloth and wash clothing in cold water. Hot water sets toner into fabric.
- Printing even after the toner empty status can cause serious damage to your machine.

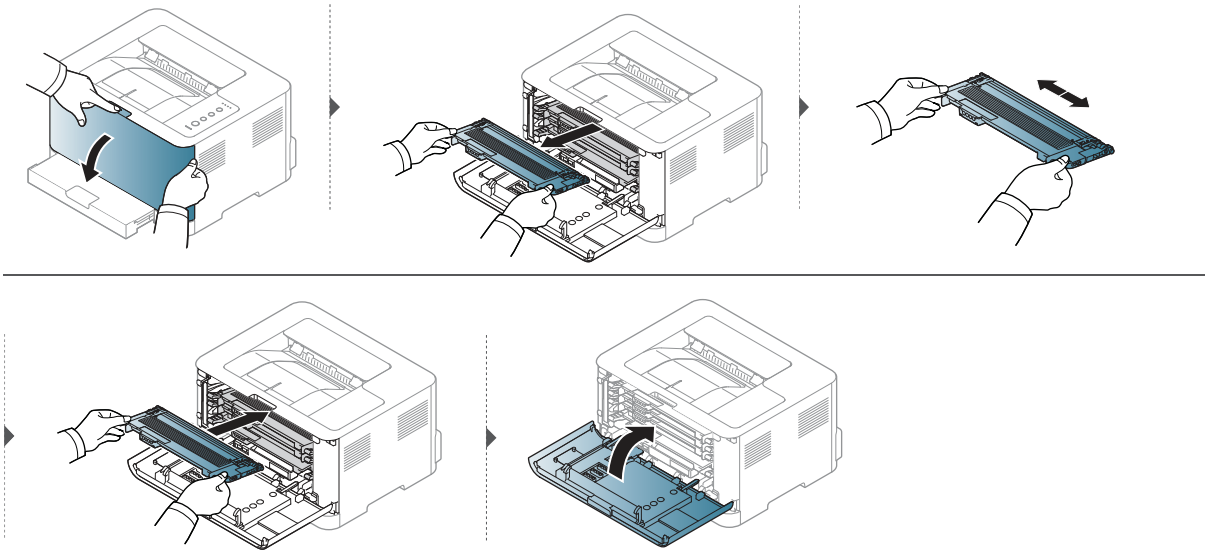

Replacing the toner cartridge

When toner cartridge needs to be replaced, check the type of the toner cartridge for your machine (see "Available supplies" on page 70).

- Before opening the front cover, close the output support first.
- Shake the toner cartridge thoroughly, it will increase the initial print quality.

- Do not use sharp objects such as a knife or scissors to open the toner cartridge package.
- If toner gets on your clothing, wipe it off with a dry cloth and wash clothing in cold water. Hot water sets toner into fabric.
- Printing even after the toner empty status can cause serious damage to your machine.

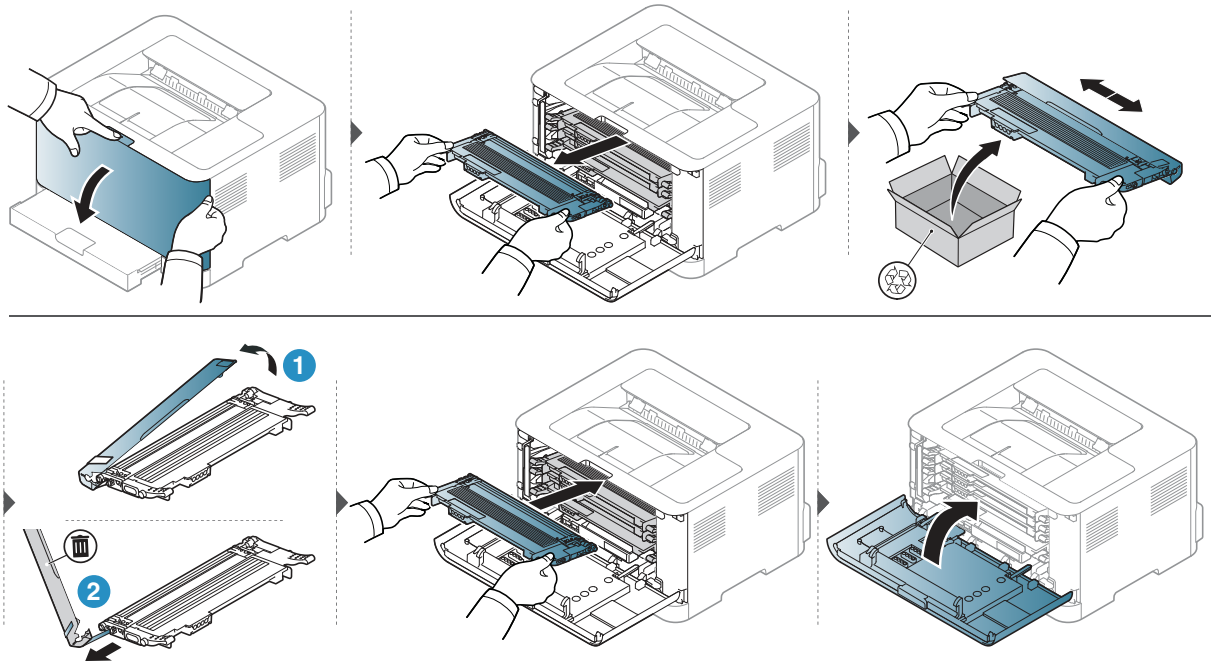

Replacing the toner collection unit

When the life span of the toner collection unit has expired, the toner collection unit needs to be replaced. Otherwise your printer stops printing.

- Toner particles can be released inside the machine but it does not mean the machine is damaged. Contact a service representative when print quality problems occur.
- When you pull out the toner collection unit out of the machine, move the toner collection unit carefully not to drop it from your hands.
- Make sure that you lay the toner collection unit on a flat surface so that the toner does not spill.

Do not tilt or turn over the toner collection unit.

The order information is provided for optional accessories (see "Available supplies" on page 70).

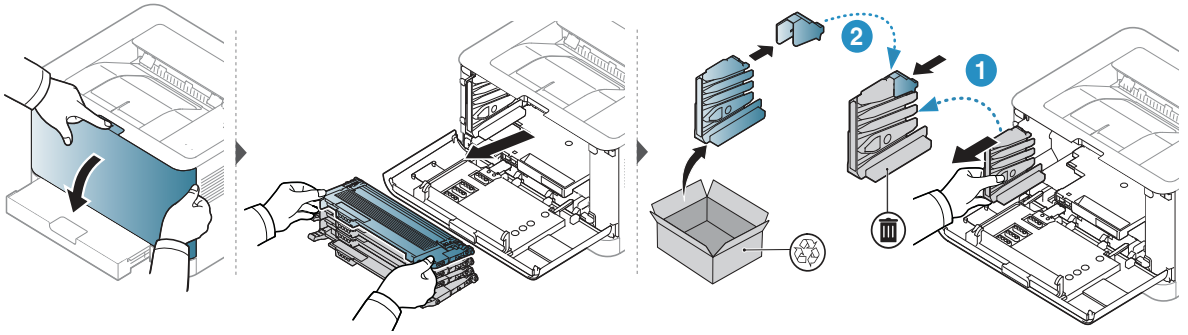

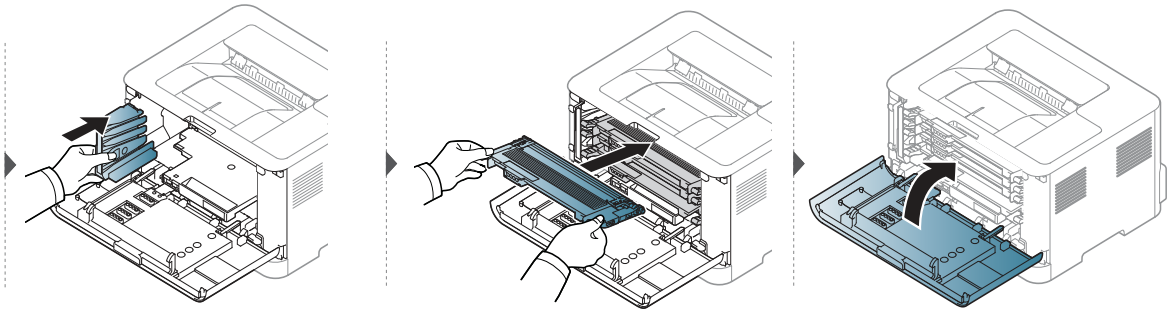

Replacing the imaging drum

When the life span of the imaging drum has expired, the imaging drum needs to be placed. Otherwise, your machine stops printing.

When the imaging unit has reached its end of life, the machine will stop printing. In this case, you can choose to stop or continue printing from the HP Embedded Web Server (**Settings** > **Machine Settings** > **System** > **Setup** > **Supplies Management** > **Imaging Unit Stop**) or HP Easy Printer Manager (**Device Settings** > **System** > **Supplies Management** > **Imaging Unit Stop**). Turning off this option and continuing to print may damage the device's system.

The imaging drum installed in this product is covered by the product warranty. Replacement imaging drums have a one-year limited warranty from the date of installation. The imaging drum installation date displays on the supplies info report.

HP's Premium Protection Warranty applies only to the print cartridges for the product.

- Don't use sharp objects such as a knife or scissors to open the imaging drum package. You could damage the surface of the imaging drum.
- Be careful not to scratch the surface of the imaging drum.
- To prevent damage, do not expose the imaging drum to light for more than a few minutes. Cover it with a piece of paper to protect it if necessary.
- Before closing the front cover, make sure all toner cartridges are installed properly.

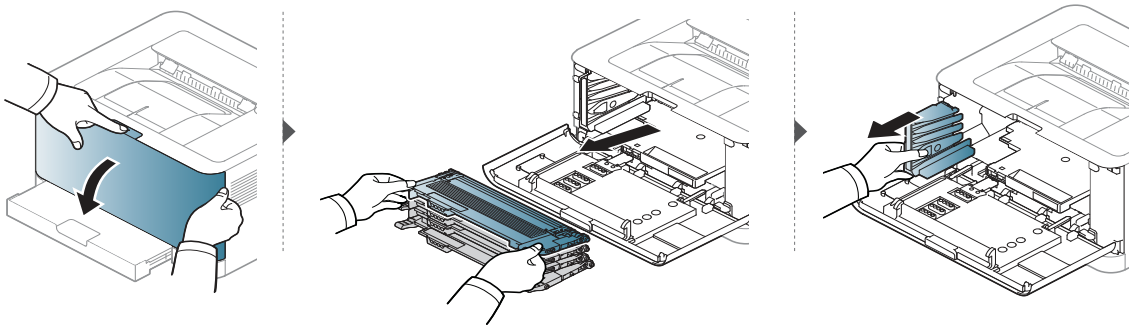

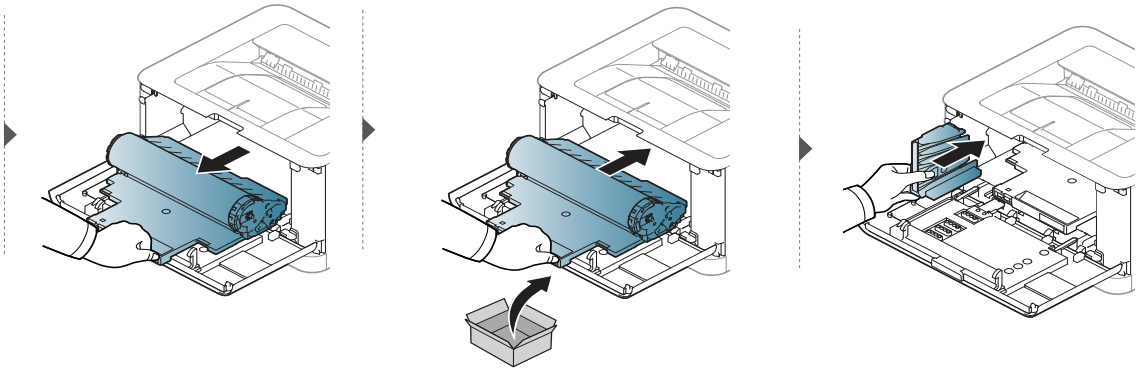

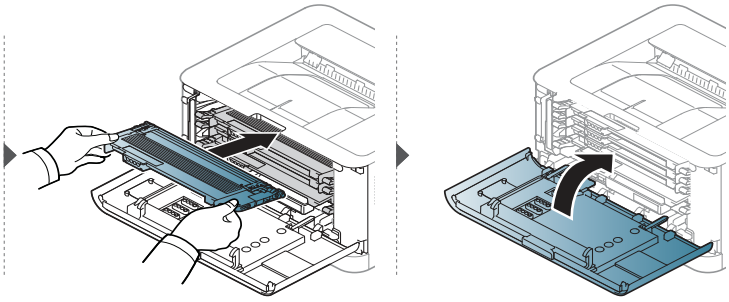

Cleaning the machine

If printing quality problems occur or if you use your machine in a dusty environment, you need to clean your machine regularly to keep it in the best printing condition and use your machine longer.

- Cleaning the cabinet of the machine with cleaning materials containing large amounts of alcohol, solvents, or other strong substances can discolor or distort the cabinet.
- If your machine or the surrounding area is contaminated with toner, we recommend you use a cloth or tissue dampened with water to clean it. If you use a vacuum cleaner, toner blows in the air and might be harmful to you.
- During the printing process, paper, toner, and dust particles can accumulate inside the machine. This buildup can cause print quality problems, such as toner specks or smearing. Cleaning the inside of the machine clears and reduces these problems.

Cleaning the outside or the display screen

Clean the machine cabinet or the display screen with a soft, lint-free cloth. Dampen the cloth slightly with water, but be careful not to let any water drip onto or into the machine.

Cleaning the inside

During the printing process, paper, toner, and dust particles can accumulate inside the machine. This buildup can cause print quality problems, such as toner specks or smearing. Cleaning the inside of the machine clears and reduces these problems.

- Use a dry lint-free cloth to clean the machine.
- If your machine has a power switch, turn the power switch off before cleaning the machine.
- Before opening the front cover, close the output support first.

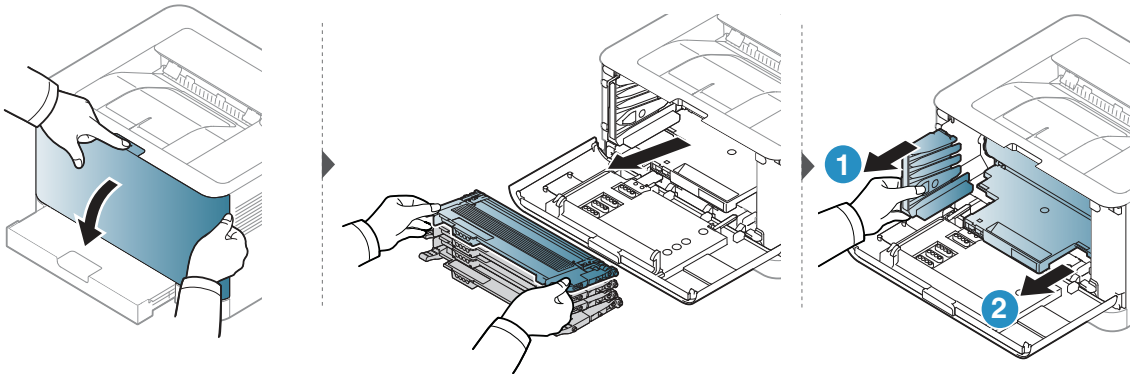
1
2

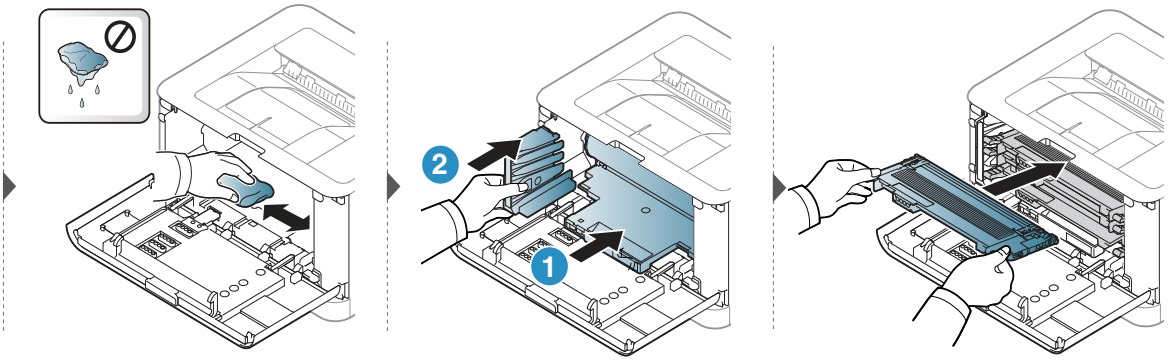
2
1

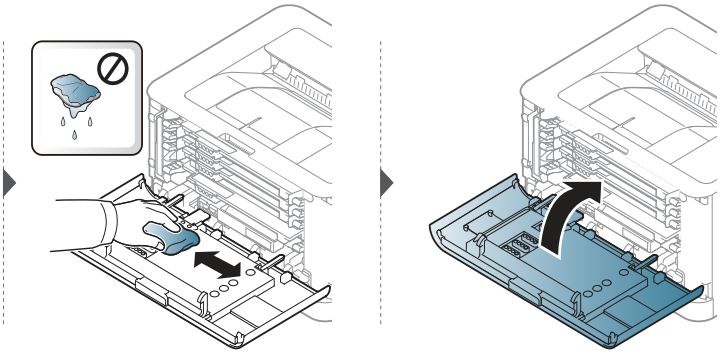

Troubleshooting

This chapter gives helpful information for what to do if you encounter an error.

This chapter gives helpful information for what to do if you encounter an error. If your machine has a display screen, check the message on the display screen first to solve the error.

- Tips for avoiding paper jams 83
- Clearing paper jams 84
- Understanding the LEDs 86
- A “Low Toner” or “Very Low Toner” message displays in Supplies information report 88
- Paper feeding problems 89
- Power and cable connecting problems 90
- Solving other problems 91
- Solve wireless network problems 100

Tips for avoiding paper jams

By selecting the correct media types, most paper jams can be avoided. To avoid paper jams, refer to the following guidelines:

- Ensure that the adjustable guides are positioned correctly (see "Tray overview" on page 27).
- Do not overload the tray. Ensure that the paper level is below the paper capacity mark on the inside of the tray.
- Do not remove paper from the tray while your machine is printing.
- Flex, fan, and straighten paper before loading.
- Do not use creased, damp, or highly curled paper.
- Do not mix paper types in a tray.
- Use only recommended print media (see "Print media specifications" on page 105).
- Do not use a paper with a leading-edge curl or wave, it may cause a paper jam or the paper can be wrinkled. Turn the stack of paper over in the tray.

Clearing paper jams

To avoid tearing the paper, pull the jammed paper out slowly and gently.

In tray

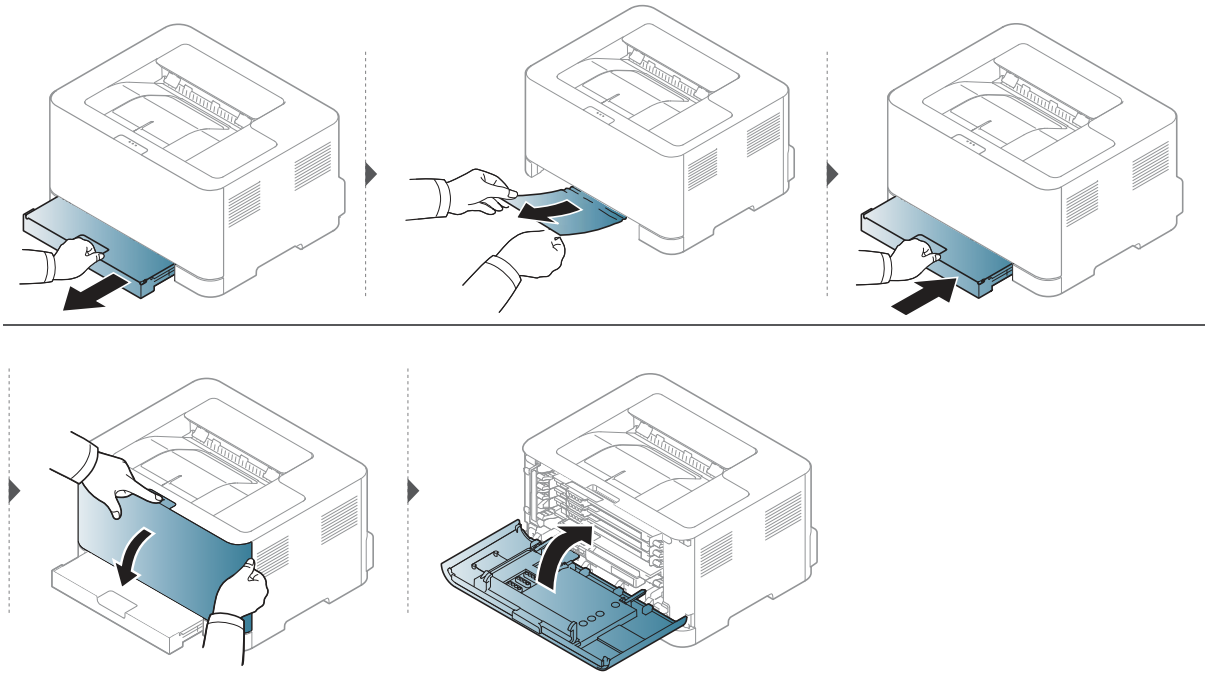

Inside the machine

The fuser area is hot. Take care when removing paper from the machine.

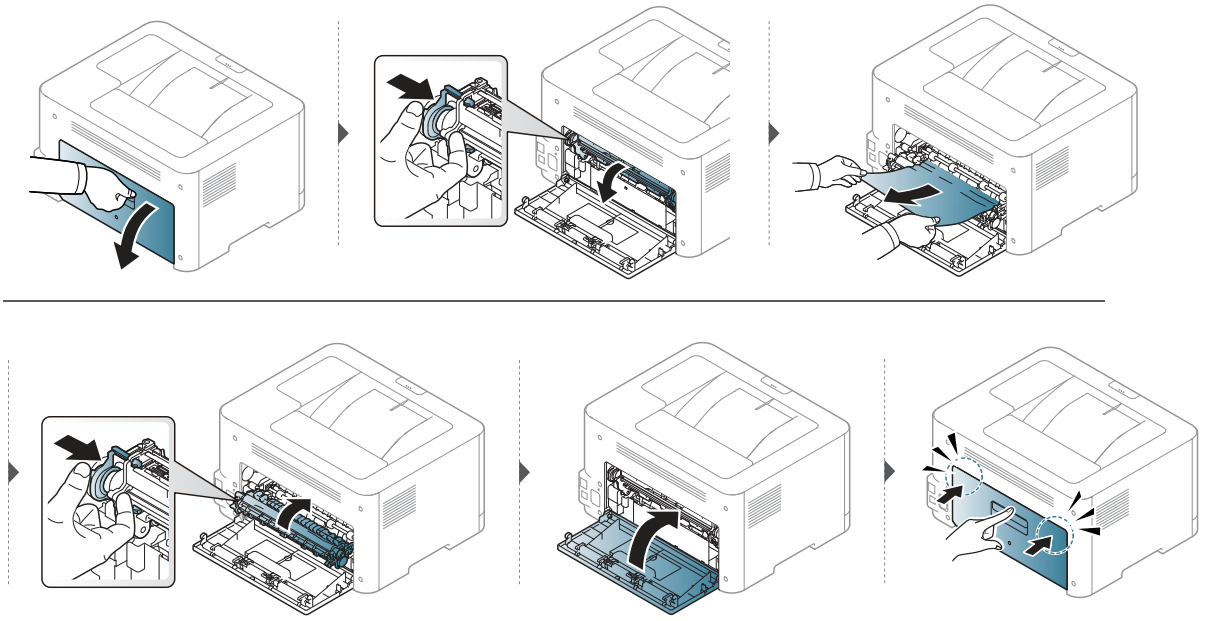

In exit area

The fuser area is hot. Take care when removing paper from the machine.

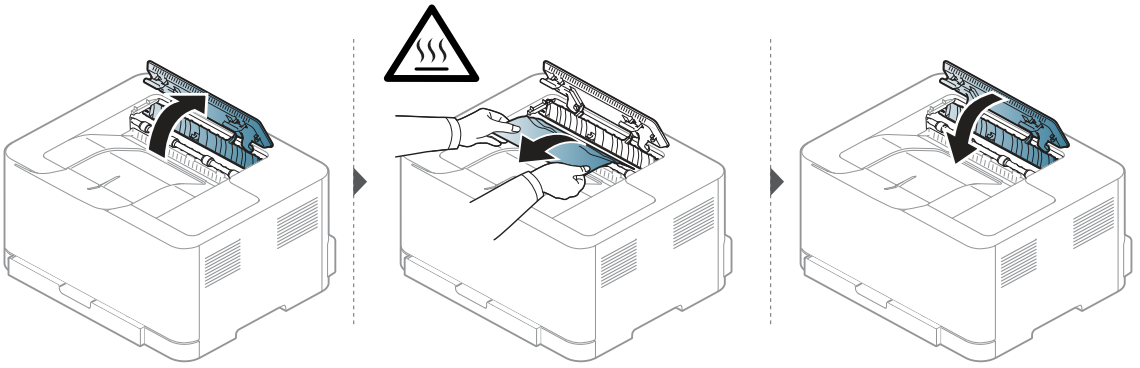

Understanding the LEDs

The color of the LED indicates the machine's behavior.

- Some LEDs may not be available depending on model or country.
- You also can resolve the error with the guideline from the computer's HP Printing Status program window.
- If the problem persists, call a service representative.

Attention LED

The color of the attention LED indicates the machine's current status.

Status			Description
! (Attention LED)	Off		The machine is off-line or normal status.
	Orange	On	The machine has stopped due to a major error.
		Blinking	The machine requires users attention: • A paper jam has occurred (see "Clearing paper jams" on page 84). • The cover is opened. Close the cover. • There is no paper in the tray when receiving or printing data. Load paper in the tray ("Loading paper in the tray" on page 28).

Toner LED/ Wireless LED / Power LED

Status			Description
(Toner LED)	Orange	Off	• All toner cartridges are at normal capacity. • Small amount of toner is left in the cartridge. The estimated cartridge life of toner is close. Prepare a new cartridge for replacement. You may temporarily increase the printing quality by redistributing the toner (see "Redistributing toner" on page 75).
		On[a]	A toner cartridge has almost reached its estimated cartridge life[b]. It is recommended to replace the toner cartridge (see "Replacing the toner cartridge" on page 76).
		Blinking	The toner cartridge is not installed or the wrong toner cartridge is installed.

Status			Description
(Wireless LED)[c]	Blue	Off	The machine is disconnected from a wireless network.
		On	The machine is connected to a wireless network (see "Wireless network setup" on page 39).
		Blinking	The machine is connecting to a wireless network.
(Power LED)	White	Off	The machine's power is off.
		On	The machine's power is on.
		Blinking	• When the machine is in power save mode, the power LED slowly blinks. • When the machine is printing data, the power LED blinks. • The machine prints configuration sheet & network configuration sheet. - Press and hold (Resume) button for about 10 seconds until the power LED blinks slowly, and release. • The machine prints supplies info report / error report. - Press and hold (Resume) button for about 15 seconds until the power LED blinks rapidly, and release.

a.The toner LED blinking for about 10 seconds and then the toner LED turns on.
b.Estimated cartridge life means the expected or estimated toner cartridge life, which indicates the average capacity of print-outs and is designed pursuant to ISO/IEC 19798. The number of pages may be affected by operating environment, printing interval, graphics, media type and media size. Some amount of toner may remain in the cartridge even when orange LED is on and the printer stops printing.
c.Wireless model only (see "Features by model" on page 7).

A “Low Toner” or “Very Low Toner” message displays in Supplies information report

Low Toner: The printer indicates when a toner cartridge level is low. Actual cartridge life remaining may vary. Consider having a replacement available to install when print quality is no longer acceptable. The cartridge does not need to be replaced now.

Very Low Toner: The printer indicates when the Toner cartridge level is very low. Actual cartridge life remaining may vary. Consider having a replacement available to install when print quality is no longer acceptable. The cartridge does not need to be replaced now unless the print quality is no longer acceptable.

Once an HP toner cartridge has reached Low Toner at default **HP Embedded Web Server (EWS)** setting, HP’s Premium Protection Warranty on that toner cartridge has ended.

To the machine prints supplies information report:

Press and hold **(Resume)** button for about **15** seconds until the power LED blinks rapidly, and release. The machine begins printing.

Paper feeding problems

Condition	Suggested solutions
Paper jams during printing.	Clear the paper jam.
Paper sticks together.	• Check the maximum paper capacity of the tray. • Make sure that you are using the correct type of paper. • Remove paper from the tray and flex or fan the paper. • Humid conditions may cause some paper to stick together.
Multiple sheets of paper do not feed.	Different types of paper may be stacked in the tray. Load paper of only one type, size, and weight.
Paper does not feed into the machine.	• Remove any obstructions from inside the machine. • Paper has not been loaded correctly. Remove paper from the tray and reload it correctly. • There is too much paper in the tray. Remove excess paper from the tray. • The paper is too thick. Use only paper that meets the specifications required by the machine.
The paper keeps jamming.	• There is too much paper in the tray. Remove excess paper from the tray. If you are printing on special materials, feed manually in the tray. • An incorrect type of paper is being used. Use only paper that meets the specifications required by the machine. • There may be debris inside the machine. Open the top cover and remove any debris.

Power and cable connecting problems

Reboot the power. If the problem persists, please call for service.

Condition	Suggested solutions
The machine is not receiving power, or the connection cable between the computer and the machine is not connected properly.	• Connect the machine to the electricity supply first and press the ⏻ (**Power**) button on the control panel. • Disconnect the machine's cable and reconnect it.

Solving other problems

Printing problems

Condition	Possible cause	Suggested solutions
The machine does not print.	The machine is not receiving power.	Check the power cord connections. Check the power switch and the power source.
	The machine is not selected as the default machine.	Select your machine as your default machine in Windows.
	Check the machine for the following: • The top cover is not closed. Close the top cover. • Paper is jammed. Clear the paper jam (see "Clearing paper jams" on page 84). • No paper is loaded. Load paper (see"Loading paper in the tray" on page 28). • The toner cartridge is not installed. Install the toner cartridge (see "Replacing the toner cartridge" on page 76). • Make sure the protect cover and sheets are removed from the toner cartridge (see "Replacing the toner cartridge" on page 76). If a system error occurs, contact your service representative.	
	The connection cable between the computer and the machine is not connected properly.	Disconnect the machine cable and reconnect it (see "Rear view" on page 19).
	The connection cable between the computer and the machine is defective.	If possible, attach the cable to another computer that is working properly and print a job. You can also try using a different machine cable.
	The port setting is incorrect.	Check the Windows printer settings to make sure that the print job is sent to the correct port. If the computer has more than one port, make sure that the machine is attached to the correct one.
	The machine may be configured incorrectly.	Check the **Printing Preferences** to ensure that all of the print settings are correct.

Condition	Possible cause	Suggested solutions
The machine does not print.	The printer driver may be incorrectly installed.	Uninstall and reinstall the machine's driver.
	The machine is malfunctioning.	Check the display message on the control panel to see if the machine is indicating a system error. Contact a service representative.
	The document size is so big that the hard disk space of the computer is insufficient to access the print job.	Get more hard disk space and print the document again.
	The output tray is full.	Once the paper is removed from the output tray, the machine resumes printing.
The machine selects print materials from the wrong paper source.	The paper option that was selected in the **Printing Preferences** may be incorrect.	For many software applications, the paper source selection is found under the **Paper** tab within the **Printing Preferences** (see "Opening printing preferences" on page 55). Select the correct paper source. See the printer driver help screen (see "Using help" on page 57).
A print job is extremely slow.	The job may be very complex.	Reduce the complexity of the page or try adjusting the print quality settings.
Half the page is blank.	The page orientation setting may be incorrect.	Change the page orientation in your application (see "Opening printing preferences" on page 55). See the printer driver help screen (see "Using help" on page 57).
	The paper size and the paper size settings do not match.	Ensure that the paper size in the printer driver settings matches the paper in the tray. Or, ensure that the paper size in the printer driver settings matches the paper selection in the software application settings you use (see "Opening printing preferences" on page 55).

Condition	Possible cause	Suggested solutions
The machine prints, but the text is wrong, garbled, or incomplete.	The machine cable is loose or defective.	Disconnect the machine cable and reconnect. Try a print job that you have already printed successfully. If possible, attach the cable and the machine to another computer that you know works and try a print job. Finally, try a new machine cable.
	The wrong printer driver was selected.	Check the application's printer selection menu to ensure that your machine is selected.
	The software application is malfunctioning.	Try printing a job from another application.
	The operating system is malfunctioning.	Exit Windows and reboot the computer. Turn the machine off and back on again.
Pages print, but they are blank.	The toner cartridge is defective or out of toner.	Redistribute the toner, if necessary. If necessary, replace the toner cartridge. • See "Redistributing toner" on page 75. • See "Replacing the toner cartridge" on page 76.
	The file may have blank pages.	Check the file to ensure that it does not contain blank pages.
	Some parts, such as the controller or the board, may be defective.	Contact a service representative.
The machine does not print PDF files correctly. Some parts of graphics, text, or illustrations are missing.	Incompatibility between the PDF file and the Acrobat products.	Printing the PDF file as an image may enable the file to print. Turn on **Print As Image** from the Acrobat printing options. It will take longer to print when you print a PDF file as an image.
The print quality of photos is not good. Images are not clear.	The resolution of the photo is very low.	Reduce the photo size. If you increase the photo size in the software application, the resolution will be reduced.
Before printing, the machine emits vapor near the output tray.	Using damp/wet paper can cause vapor [white smoke] during printing.	This is not a problem, just keep printing. If you are bothered by the smoke [vapor], then replace the paper with fresh paper from an unopened ream.

Condition	Possible cause	Suggested solutions
The machine does not print special-sized paper, such as billing paper.	Paper size and paper size setting do not match.	Set the correct paper size in the **Custom** in **Paper** tab in **Printing Preferences** (see "Opening printing preferences" on page 55).
The printed billing paper is curled.	The paper type setting does not match.	Change the printer option and try again. Go to **Printing Preferences**, click **Paper** tab, and set type to **Heavy 90-120g** (see "Opening printing preferences" on page 55).

Printing quality problems

If the inside of the machine is dirty or paper has been loaded improperly, there might be a reduction in print quality. See the table below to clear the problem.

Condition	Suggested Solutions
Light or faded print 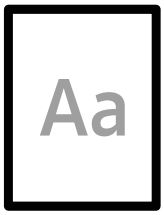	• If a vertical white streak or faded area appears on the page, the toner supply is low. Install a new toner cartridge (see "Replacing the toner cartridge" on page 76). • If a vertical white streak or faded area still appears on the page even though the machine has enough toner supply, open and close the front door 3 ~ 4 times (see "Machine overview" on page 18). • The paper may not meet paper specifications; for example, the paper may be too moist or rough. • If the entire page is light, the print resolution setting is too low or the toner save mode is on. Adjust the print resolution and turn the toner save mode off. See the help screen of the printer driver. • A combination of faded or smeared defects may indicate that the toner cartridge needs cleaning. Clean the inside of your machine (see "Cleaning the machine" on page 80). • The surface of the LSU part inside the machine may be dirty. Clean the inside of your machine (see "Cleaning the machine" on page 80). If these steps do not correct the problem, contact a service representative.
The top half of the paper is printed lighter than the rest of the paper 	The toner might not adhere properly to this type of paper. • Change the printer option and try again. Go to **Printing Preferences**, click the **Paper** tab, and set the paper type to **Recycled** (see "Opening printing preferences" on page 55).

Condition	Suggested Solutions
Toner specks 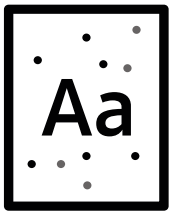	• The paper may not meet specifications; for example, the paper may be too moist or rough. • The transfer roller may be dirty. Clean the inside of your machine (see "Cleaning the machine" on page 80). • The paper path may need cleaning. Contact a service representative (see "Cleaning the machine" on page 80).
Dropouts 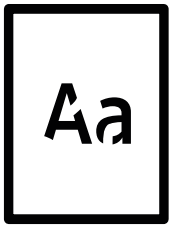	If faded areas, generally rounded, occur randomly on the page: • A single sheet of paper may be defective. Try reprinting the job. • The moisture content of the paper is uneven or the paper has moist spots on its surface. Try a different brand of paper. • The paper lot is bad. The manufacturing processes can cause some areas to reject toner. Try a different kind or brand of paper. • Change the printer option and try again. Go to **Printing Preferences**, click the **Paper** tab, and set type to **Heavy 90-120g** (see "Opening printing preferences" on page 55). If these steps do not correct the problem, contact a service representative.
White Spots 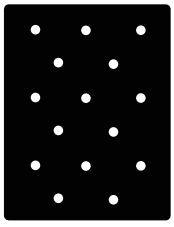	If white spots appear on the page: • The paper is too rough and a lot of dirt from paper falls to the inner components within the machine, so the transfer roller may be dirty. Clean the inside of your machine (see "Cleaning the machine" on page 80). • The paper path may need cleaning. Clean the inside of your machine (see "Cleaning the machine" on page 80). If these steps do not correct the problem, contact a service representative.
Vertical lines 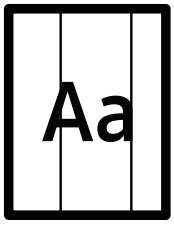	If black vertical streaks appear on the page: • The surface (drum part) of the imaging drum inside the machine has probably been scratched. Remove the toner cartridge and install a new one (see "Replacing the imaging drum" on page 78). If white vertical streaks appear on the page: • The surface of the LSU part inside the machine may be dirty. Clean the inside of your machine (see "Cleaning the machine" on page 80). If these steps do not correct the problem, contact a service representative.
Black background 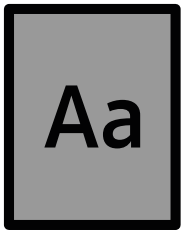	If the amount of background shading becomes unacceptable: • Change to a lighter weight paper. • Check the environmental conditions: very dry conditions or a high level of humidity (higher than 80% RH) can increase the amount of background shading. • Remove the old imaging drum and install a new one (see "Replacing the imaging drum" on page 78). • Thoroughly redistribute the toner (see "Redistributing toner" on page 75).

Condition	Suggested Solutions
Toner smear	• Clean the inside of the machine (see "Replacing the toner cartridge" on page 76). • Check the paper type and quality. • Remove the old imaging drum and install a new one (see "Replacing the imaging drum" on page 78).
Vertical repetitive defects	If marks repeatedly appear on the printed side of the page at even intervals: • The imaging drum may be damaged. If you still have the same problem, remove the imaging drum and, install a new one (see "Replacing the imaging drum" on page 78). • Parts of the machine may have toner on them. If the defects occur on the back of the page, the problem will likely correct itself after a few more pages. • The fusing assembly may be damaged. Contact a service representative.
Background scatter	Background scatter results from bits of toner randomly distributed on the printed page. • The paper may be too damp. Try printing with a different batch of paper. Do not open packages of paper until necessary so that the paper does not absorb too much moisture. • If background scatter covers the entire surface area of a printed page, adjust the print resolution through your software application or in **Printing Preferences** (see "Opening printing preferences" on page 55). Ensure the correct paper type is selected. For example: If **Heavy 90-120g** is selected, but **Plain Paper** actually used, an overcharging can occur causing this copy quality problem. • If you are using a new toner cartridge, redistribute the toner first (see "Redistributing toner" on page 75).
Toner particles are around bold characters or pictures	The toner might not adhere properly to this type of paper. • Change the printer option and try again. Go to **Printing Preferences**, click the **Paper** tab, and set the paper type to **Recycled** (see "Opening printing preferences" on page 55). • Ensure the correct paper type is selected. For example: If **Heavy 90-120g** is selected, but **Plain Paper** actually used, an overcharging can occur causing this copy quality problem.

Condition	Suggested Solutions
Misformed characters 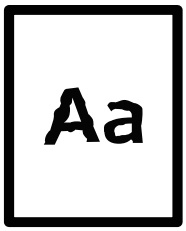	• If characters are improperly formed and producing hollow images, the paper stock may be too slick. Try different paper.
Page skew 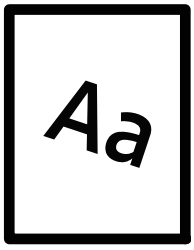	• Ensure that the paper is loaded properly. • Check the paper type and quality. • Ensure that the guides are not too tight or too loose against the paper stack.
Curl or wave 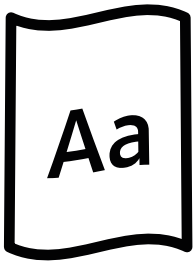	• Ensure that the paper is loaded properly. • Check the paper type and quality. Both high temperature and humidity can cause paper curl. • Turn the stack of paper over in the tray. Also try rotating the paper 180° in the tray.
Wrinkles or creases 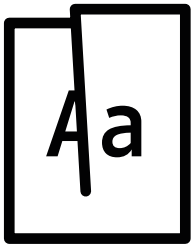	• Ensure that the paper is loaded properly. • Check the paper type and quality. • Turn the stack of paper over in the tray. Also try rotating the paper 180° in the tray.
Back of printouts are dirty 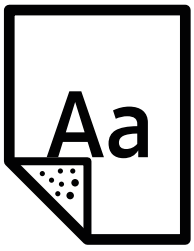	• Check for leaking toner. Clean the inside of the machine (see "Cleaning the machine" on page 80).

Condition	Suggested Solutions
Solid color or black pages	• The imaging drum may not be installed properly. Remove the imaging drum and reinsert it. • The imaging drum may be defective. Remove the imaging drum and install a new one (see "Replacing the imaging drum" on page 78). • The machine may require repairing. Contact a service representative.
Loose toner 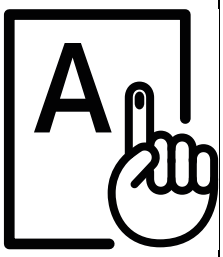	• Clean the inside of the machine (see "Cleaning the machine" on page 80). • Check the paper type and quality. • Remove the imaging drum and then, install a new one (see "Replacing the imaging drum" on page 78). If the problem persists, the machine may require repair. Contact a service representative.
Character voids 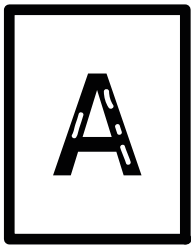	Character voids are white areas within parts of characters that should be solid black: • You may be printing on the wrong surface of the paper. Remove the paper and turn it around. • The paper may not meet paper specifications.
Horizontal stripes 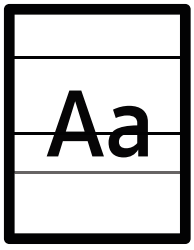	If horizontally aligned black streaks or smears appear: • The imaging drum may be installed improperly. Remove the imaging drum and reinsert it. • The imaging drum may be defective. Remove the imaging drum and install a new one (see "Replacing the imaging drum" on page 78). If the problem persists, the machine may require repairing. Contact a service representative.
Curl 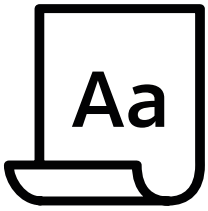	If the printed paper is curled or paper does not feed into the machine: • Turn the stack of paper over in the tray. Also try rotating the paper 180° in the tray. • Change the printer's paper option and try again. Go to **Printing Preferences**, click the **Paper** tab, and set type to **Light 60-69g** (see "Opening printing preferences" on page 55).

Condition	Suggested Solutions
• An unknown image repetitively appears on a few sheets • Loose toner • Light print or contaminatio n occurs	Your machine is probably being used at an altitude of 1,000 m (3,281 ft) or above. The high altitude may affect the print quality, such as loose toner or light imaging. Change the altitude setting for your machine (See "Altitude adjustment" on page 25).

Operating system problems

Common Windows problems

Condition	Suggested solutions
“File in Use” message appears during installation.	Exit all software applications. Remove all software from the startup group, then restart Windows. Reinstall the printer driver.
“General Protection Fault”, “Exception OE”, “Spool 32”, or “Illegal Operation” messages appear.	Close all other applications, reboot Windows and try printing again.
“Fail To Print”, “A printer timeout error occurred” message appear.	These messages may appear during printing. Just keep waiting until the machine finishes printing. If the message appears in ready mode or after printing has completed, check the connection and/or whether an error has occurred.
Machine information is not displayed when you click the device in the **Devices and Printers**.	Check the **Printer properties**. Click the **Ports** tab. (**Control Panel** > **Devices and Printers** > Right-click on your printer icon and select **Printer properties**) If the port is set to File or LPT, uncheck them and select TCP/IP, USB, or WSD.

Refer to the Microsoft Windows User’s Guide that came with your computer for further information on Windows error messages.

Solve wireless network problems

Use the troubleshooting information to help resolve issues.

To determine whether Wi-Fi Direct printing is enabled on your printer, print a configuration page from the printer control panel.

Wireless connectivity checklist

- Verify that the printer and the wireless router are turned on and have power. Also make sure that the wireless radio in the printer is turned on.
- Verify that the service set identifier (SSID) is correct. Print a configuration page to determine the SSID (see "Printing a network configuration report" on page 36).
- With secured networks, verify that the security information is correct. If the security information is incorrect, run the wireless setup again.
- If the wireless network is working correctly, try accessing other computers on the wireless network. If the network has Internet access, try connecting to the Internet over a wireless connection.
- Verify that the encryption method (AES or TKIP) is the same for the printer as it is for the wireless access point (on networks using WPA security).
- Verify that the printer is within the range of the wireless network. For most networks, the printer must be within 30 m (100 ft) of the wireless access point (wireless router).
- Verify that obstacles do not block the wireless signal. Remove any large metal objects between the access point and the printer. Make sure poles, walls, or support columns containing metal or concrete do not separate the printer and wireless access point.
- Verify that the printer is located away from electronic devices that might interfere with the wireless signal. Many devices can interfere with the wireless signal including motors, cordless phones, security system cameras, other wireless networks, and some Bluetooth devices. Verify that the print driver is installed on the computer.
- Verify that you have selected the correct printer port.
- Verify that the computer and printer connect to the same wireless network.
- For OS X, verify that the wireless router supports Bonjour.

The printer does not print after the wireless configuration completes

1. Make sure that the printer is turned on and in the ready state.
2. Turn off any third-party firewalls on your computer.
3. Make sure that the wireless network is working correctly.
4. Make sure that your computer is working correctly. If necessary, restart the computer.
5. Verify that you can open the printer HP Embedded Web Server from a computer on the network.

The printer does not print, and the computer has a third-party firewall installed

1. Update the firewall with the most recent update available from the manufacturer.
2. If programs request firewall access when you install the printer or try to print, make sure you allow the programs to run.
3. Temporarily turn off the firewall, and then install the wireless printer on the computer. Enable the firewall when you have completed the wireless installation.

The wireless connection does not work after moving the wireless router or printer

1. Make sure that the router or printer connects to the same network that your computer connects to.
2. Print a configuration page.
3. Compare the service set identifier (SSID) on the configuration page to the SSID in the printer configuration for the computer.
4. If the service set identifier (SSID) are not the same, the devices are not connecting to the same network. Reconfigure the wireless setup for the printer.

Cannot connect more computers to the wireless printer

1. Make sure that the other computers are within the wireless range and that no obstacles block the signal. For most networks, the wireless range is within 30 m (100 ft) of the wireless access point.
2. Make sure that the printer is turned on and in the ready state.
3. Make sure there are not more than 5 concurrent Wi-Fi Direct users.
4. Turn off any third-party firewalls on your computer.
5. Make sure that the wireless network is working correctly.
6. Make sure that your computer is working correctly. If necessary, restart the computer.

The wireless printer loses communication when connected to a VPN

- Typically, you cannot connect to a VPN and other networks at the same time.

The network does not appear in the wireless networks list

- Make sure the wireless router is turned on and has power.
- The network might be hidden. However, you can still connect to a hidden network.

The wireless network is not functioning

1. To verify if the network has lost communication, try connecting other devices to the network.
2. Test network communication by pinging the network.
   a. Open a command-line prompt on your computer.
      - For Windows, click **Start**, click **Run**, type cmd, an then press **Enter**.
      - For OS X, go to **Applications**, then **Utilities**, and open **Terminal**.

b. Type ping followed by the router IP address.

c. If the window displays round-trip times, the network is working.

3. Make sure that the router or printer connects to the same network that the computer connects to.

   a. Print a configuration page (see "Printing a network configuration report" on page 36).

   b. Compare the service set identifier (SSID) on the configuration report to the SSID in the printer configuration for the computer.

   c. If the numbers are not the same, the devices are not connecting to the same network. Reconfigure the wireless setup for the printer.

Perform a wireless network diagnostic test

From the printer control panel, you can run a diagnostic test that provides information about the wireless network settings (see "Printing a network configuration report" on page 36).

Appendix

This chapter provides product specifications and information concerning applicable regulations.

- General specifications 104
- Print media specifications 105
- System requirements 108

General specifications

General specifications

These specifications are subject to change without notice. To see additional specifications and information about changes to the specifications, please visit www.hp.com/support/colorlaser150.

Items		Description
Dimension[a] (Width x Length x Height)		382 x 309 x 211.5 mm (15.0 x 12.2 x 8.3 inches)
Weight [a] (Machine with consumables)		10.04 kg (22.13 lbs)
Temperature	Operation	10 to 32°C (50 to 86.9°F)
	Storage (packed)	-20 to 40°C (-4 to 104°F)
Humidity	Operation	20 to 80% RH
	Storage (packed)	10 to 90% RH
Power rating[b]	110 volt models	AC 110 - 127 V
	220 volt models	AC 220 - 240 V

a.Dimensions and weight are measured without other accessories.
b.See the rating label on the machine for the correct voltage (V), frequency (hertz) and type of current (A) for your machine.

Print media specifications

Type	Size	Dimensions	Print media weight/Capacity[a]
			Tray
Plain	Letter	216 x 279 mm (8.5 x 11 inches)	60 to 85 g/m^2 (16 to 23 lbs bond) • 150 sheets of 75 g/m^2 (20 lbs bond) • Maximum stack height : 15.5mm (0.6 inches)
	A4	210 x 297 mm (8.27 x 11.69 inches)	
	Legal	216 x 356 mm (8.5 x 14 inches)	
	Oficio 216 x340mm	216 x 343 mm (8.5 x 13 inches)	
	Oficio 8.5x13	216 x 330 mm (8.5 x 13 inches)	
	B5(JIS)	182 x 257 mm (7.17 x 10.12 inches)	
	Executive	184 x 267 mm (7.25 x 10.5 inches)	
	A5	149 x 210 mm (5.85 x 8.27 inches)	
	A6	105 x 149 mm (4.13 x 5.85 inches)	
Heavy 90-120g	Refer to the Plain paper section	Refer to the Plain paper section	86 to 120 g/m^2 (23 to 32lbs bond) • 5 sheets
Light 60-69g	Refer to the Plain paper section	Refer to the Plain paper section	60 to 70 g/m^2 (16 to 19 lbs bond) • 150 sheets of 60 g/m^2 (16 lbs bond) • Maximum stack height : 15.5mm (0.6 inches)

Type	Size	Dimensions	Print media weight/Capacity[a]
			Tray
Colored, Preprinted,	**Refer to the Plain paper section**	Refer to the Plain paper section	60 to 85 g/m^2 (16 to 24 lbs bond) • 150 sheets of 75 g/m^2 (20 lbs bond) • Maximum stack height : 15.5mm (0.6 inches)
Recycled	**Refer to the Plain paper section**	Refer to the Plain paper section	60 to 85 g/m^2 (16 to 24 lbs bond) • 5 sheets of 75 g/m^2 (20 lbs bond) • Maximum stack height : 15.5mm (0.6 inches)
Labels[b]	**Refer to the Plain paper section**	Refer to the Plain paper section	120 to 150 g/m^2 (32 to 40 lbs bond) • 5 sheets
X-Hvy 121-163	**Letter, Legal, Oficio 216 x340mm, Oficio 8.5 x13, A4, B5(JIS), Executive, A5, A5 LEF, 4x6**	Refer to the Plain paper section	121 to 163 g/m^2 (32 to 43 lbs bond) • 5 sheets
Bond	**Refer to the Plain paper section**	Refer to the Plain paper section	105 to 120 g/m^2 (28 to 32 lbs bond) • 10 sheets
Glossy111-130 g	**Letter, A4, 4x6**	Refer to the Plain paper section	111 to 130 g/m^2 (30 to 58 lbs bond) • 1 sheets
Glossy131-175 g	**Letter, A4, 4x6**	Refer to the Plain paper section	131 to 175 g/m^2 (30 to 58 lbs bond) • 1 sheets
Glossy176-220 g	**Letter, A4, 4x6**	Refer to the Plain paper section	176 to 220 g/m^2 (30 to 58 lbs bond) • 1 sheets
HP Matte 120 g	**Letter, A4, 4x6**	Refer to the Plain paper section	120 g/m^2 (30 to 58 lbs bond) • 1 sheets
HP Matte 150 g	**Letter, A4, 4x6**	Refer to the Plain paper section	150 g/m^2 (30 to 58 lbs bond) • 1 sheets
HP Matte 200 g	**Letter, A4, 4x6**	Refer to the Plain paper section	200 g/m^2 (30 to 58 lbs bond) • 1 sheets

Type	Size	Dimensions	Print media weight/Capacity[a]
			Tray
Minimum size (custom)		76 x 148.5 mm (3.0 x 5.85 inches)	60 to 120 g/m^2 (16 to 32 lbs bond)
Maximum size (custom)		216x 356 mm (8.5 x 14 inches)	

a.Maximum capacity may differ depending on media weight, thickness, and environmental conditions.
b.The smoothness of the labels used in this machine is 100 to 250 (sheffield). This means the numeric level of smoothness.

If media weight is over 120 g/m^2 (32 lbs bond), load a paper into the tray one by one.

System requirements

Microsoft® Windows®

Printer software are occasionally updated due to release of new operating system and etc. If needed, download the latest version from the HP website (www.hp.com/support/colorlaser150).

Windows 7, 32-bit and 64-bit	The HP printer-specific print driver is installed for this operating system as part of the software installation.	
Windows 8, 32-bit and 64-bit	The HP printer-specific print driver is installed for this operating system as part of the software installation.	
Windows 8.1, 32-bit and 64-bit	The HP V4 printer-specific print driver is installed for this operating system as part of the software installation.	
Windows 10, 32-bit and 64-bit	The HP V4 printer-specific print driver is installed for this operating system as part of the software installation.	
Windows Server 2008 R2, 64-bit	The HP PCLm.S printer-specific print driver is available for download from the printer-support website. Download the driver, and then use the Microsoft Add Printer tool to install it.	Microsoft retired mainstream support for Windows Server 2008 in January 2015. HP will continue to provide best effort support for the discontinued Server 2008 operating system.
Windows Server 2008 R2, SP1, 64-bit	The HP printer-specific print driver is installed for this operating system as part of the software installation.	
Windows Server 2012	The HP printer-specific print driver is installed for this operating system as part of the software installation.	
Windows Server 2012 R2	The HP printer-specific print driver is installed for this operating system as part of the software installation.	
Windows Server 2016, 64-bit	The HP printer-specific print driver is installed for this operating system as part of the software installation.	

Mac OS

Direct printing using Apple's AirPrint is supported for iOS and from Mac computers running OS X 10.7 Lion and newer. Use AirPrint to print directly to the printer from an iPad, iPhone (3GS or later), or iPod touch (third generation or later) in the mobile applications (Mail, Photos, Safari, iBooks, Select third-party applications)

- The USB-only models without wired or Wi-Fi network functionality do not support Mac OS.
- To use AirPrint, the printer must be connected to the same network (sub-net) as the Apple device.
- Before using AirPrint with a USB connection, verify the version number. AirPrint versions 1.3 and earlier do not support USB connections.

Glossary

The following glossary helps you get familiar with the product by understanding the terminologies commonly used with printing as well as mentioned in this user's guide.

802.11

802.11 is a set of standards for wireless local area network (WLAN) communication, developed by the IEEE LAN/MAN Standards Committee (IEEE 802).

802.11b/g/n

802.11b/g/n can share same hardware and use the 2.4 GHz band. 802.11b supports bandwidth up to 11 Mbps, 802.11n supports bandwidth up to 150 Mbps. 802.11b/g/n devices may occasionally suffer interference from microwave ovens, cordless telephones, and Bluetooth devices.

Access point

Access Point or Wireless Access Point (AP or WAP) is a device that connects wireless communication devices together on wireless local area networks (WLAN), and acts as a central transmitter and receiver of WLAN radio signals.

ADF

An Automatic Document Feeder (ADF) is a scanning unit that will automatically feed an original sheet of paper so that the machine can scan some amount of the paper at once.

AppleTalk

AppleTalk is a proprietary suite of protocols developed by Apple, Inc for computer networking. It was included in the original Mac (1984) and is now deprecated by Apple in favor of TCP/IP networking.

BIT Depth

A computer graphics term describing the number of bits used to represent the color of a single pixel in a bitmapped image. Higher color depth gives a broader range of distinct colors. As the number of bits increases, the number of possible colors becomes impractically large for a color map. 1-bit color is commonly called as monochrome or black and white.

BMP

A bitmapped graphics format used internally by the Microsoft Windows graphics subsystem (GDI), and used commonly as a simple graphics file format on that platform.

BOOTP

Bootstrap Protocol. A network protocol used by a network client to obtain its IP address automatically. This is usually done in the bootstrap process of computers or operating systems running on them. The BOOTP servers assign the IP address from a pool of addresses to each client. BOOTP enables 'diskless workstation' computers to obtain an IP address prior to loading any advanced operating system.

CCD

Charge Coupled Device (CCD) is a hardware which enables the scan job. CCD Locking mechanism is also used to hold the CCD module to prevent any damage when you move the machine.

Collation

Collation is a process of printing a multiple-copy job in sets. When collation is selected, the device prints an entire set before printing additional copies.

Control Panel

A control panel is a flat, typically vertical, area where control or monitoring instruments are displayed. They are typically found in front of the machine.

Coverage

It is the printing term used for a toner usage measurement on printing. For example, 5% coverage means that an A4 sided paper has about 5% image or text on it. So, if the paper or original has complicated images or lots of text on it, the coverage will be higher and at the same time, a toner usage will be as much as the coverage.

CSV

Comma Separated Values (CSV). A type of file format, CSV is used to exchange data between disparate applications. The file format, as it is used in Microsoft Excel, has become a de facto standard throughout the industry, even among non-Microsoft platforms.

DADF

A Duplex Automatic Document Feeder (DADF) is a scanning unit that will automatically feed and turn over an original sheet of paper so that the machine can scan on both sides of the paper.

Default

The value or setting that is in effect when taking a printer out of its box state, reset, or initialized.

DHCP

A Dynamic Host Configuration Protocol (DHCP) is a client-server networking protocol. A DHCP server provides configuration parameters specific to the DHCP client host requesting, generally, information required by the client host to participate on an IP network. DHCP also provides a mechanism for allocation of IP addresses to client hosts.

DIMM

Dual Inline Memory Module (DIMM), a small circuit board that holds memory. DIMM stores all the data within the machine like printing data, received fax data.

DLNA

The Digital Living Network Alliance (DLNA) is a standard that allows devices on a home network to share information with each other across the network.

DNS

The Domain Name Server (DNS) is a system that stores information associated with domain names in a distributed database on networks, such as the Internet.

Dot Matrix Printer

A dot matrix printer refers to a type of computer printer with a print head that runs back and forth on the page and prints by impact, striking an ink-soaked cloth ribbon against the paper, much like a typewriter.

DPI

Dots Per Inch (DPI) is a measurement of resolution that is used for scanning and printing. Generally, higher DPI results in a higher resolution, more visible detail in the image, and a larger file size.

DRPD

Distinctive Ring Pattern Detection. Distinctive Ring is a telephone company service which enables a user to use a single telephone line to answer several different telephone numbers.

Duplex

A mechanism that will turn over a sheet of paper so that the machine can print (or scan) on both sides of the paper. A printer equipped with a Duplex Unit can print on both sides of paper during one print cycle.

Duty Cycle

Duty cycle is the page quantity which does not affect printer performance for a month. Generally the printer has the lifespan limitation such as pages per year. The lifespan means the average capacity of print-outs, usually within the warranty period. For example, if the duty cycle is 48,000 pages per month assuming 20 working days, a printer limits 2,400 pages a day.

ECM

Error Correction Mode (ECM) is an optional transmission mode built into Class 1 fax machines or fax modems. It automatically detects and corrects errors in the fax transmission process that are sometimes caused by telephone line noise.

Emulation

Emulation is a technique of one machine obtaining the same results as another.
An emulator duplicates the functions of one system with a different system, so that the second system behaves like the first system. Emulation focuses on exact reproduction of external behavior, which is in contrast to

simulation, which concerns an abstract model of the system being simulated, often considering its internal state.

Ethernet

Ethernet is a frame-based computer networking technology for local area networks (LANs). It defines wiring and signaling for the physical layer, and frame formats and protocols for the media access control (MAC)/data link layer of the OSI model. Ethernet is mostly standardized as IEEE 802.3. It has become the most widespread LAN technology in use during the 1990s to the present.

EtherTalk

A suite of protocols developed by Apple Computer for computer networking. It was included in the original Mac (1984) and is now deprecated by Apple in favor of TCP/IP networking.

FDI

Foreign Device Interface (FDI) is a card installed inside the machine to allow a third party device such as a coin operated device or a card reader. Those devices allow the pay-for-print service on your machine.

FTP

A File Transfer Protocol (FTP) is a commonly used protocol for exchanging files over any network that supports the TCP/IP protocol (such as the Internet or an intranet).

Fuser Unit

The part of a laser printer that fuses the toner onto the print media. It consists of a heat roller and a pressure roller. After toner is transferred onto the paper, the fuser unit applies heat and pressure to ensure that the toner stays on the paper permanently, which is why paper is warm when it comes out of a laser printer.

Gateway

A connection between computer networks, or between a computer network and a telephone line. It is very popular, as it is a computer or a network that allows access to another computer or network.

Grayscale

A shades of gray that represents light and dark portions of an image when color images are converted to grayscale; colors are represented by various shades of gray.

Halftone

An image type that simulates grayscale by varying the number of dots. Highly colored areas consist of a large number of dots, while lighter areas consist of a smaller number of dots.

HDD

Hard Disk Drive (HDD), commonly referred to as a hard drive or hard disk, is a non-volatile storage device which stores digitally-encoded data on rapidly rotating platters with magnetic surfaces.

IEEE

The Institute of Electrical and Electronics Engineers (IEEE) is an international non-profit, professional organization for the advancement of technology related to electricity.

IEEE 1284

The 1284 parallel port standard was developed by the Institute of Electrical and Electronics Engineers (IEEE). The term "1284-B" refers to a specific connector type on the end of the parallel cable that attaches to the peripheral (for example, a printer).

Intranet

A private network that uses Internet Protocols, network connectivity, and possibly the public telecommunication system to securely share part of an organization's information or operations with its employees. Sometimes the term refers only to the most visible service, the internal website.

IP address

An Internet Protocol (IP) address is a unique number that devices use in order to identify and communicate with each other on a network utilizing the Internet Protocol standard.

IPM

The Images Per Minute (IPM) is a way of measuring the speed of a printer. An IPM rate indicates the number of single-sided sheets a printer can complete within one minute.

IPP

The Internet Printing Protocol (IPP) defines a standard protocol for printing as well as managing print jobs, media size, resolution, and so forth. IPP can be used locally or over the Internet to hundreds of printers, and also supports access control, authentication, and encryption, making it a much more capable and secure printing solution than older ones.

IPX/SPX

IPX/SPX stands for Internet Packet Exchange/Sequenced Packet Exchange. It is a networking protocol used by the Novell NetWare operating systems. IPX and SPX both provide connection services similar to TCP/IP, with the IPX protocol having similarities to IP, and SPX having similarities to TCP. IPX/SPX was primarily designed for local area networks (LANs), and is a very efficient protocol for this purpose (typically its performance exceeds that of TCP/IP on a LAN).

ISO

The International Organization for Standardization (ISO) is an international standard-setting body composed of representatives from national standards bodies. It produces world-wide industrial and commercial standards.

ITU-T

The International Telecommunication Union is an international organization established to standardize and regulate international radio and telecommunications. Its main tasks include standardization, allocation of the radio spectrum, and organizing interconnection arrangements between different countries to allow international phone calls. A -T out of ITU-T indicates telecommunication.

ITU-T No. 1 chart

Standardized test chart published by ITU-T for document facsimile transmissions.

JBIG

Joint Bi-level Image Experts Group (JBIG) is an image compression standard with no loss of accuracy or quality, which was designed for compression of binary images, particularly for faxes, but can also be used on other images.

JPEG

Joint Photographic Experts Group (JPEG) is a most commonly used standard method of lossy compression for photographic images. It is the format used for storing and transmitting photographs on the World Wide Web.

LDAP

The Lightweight Directory Access Protocol (LDAP) is a networking protocol for querying and modifying directory services running over TCP/IP.

LED

A Light-Emitting Diode (LED) is a semiconductor device that indicates the status of a machine.

MAC address

Media Access Control (MAC) address is a unique identifier associated with a network adapter. MAC address is a unique 48-bit identifier usually written as 12 hexadecimal characters grouped in pairs (e. g., 00-00-0c-34-11-4e). This address is usually hard-coded into a Network Interface Card (NIC) by its manufacturer, and used as an aid for routers trying to locate machines on large networks.

MFP

Multi Function Peripheral (MFP) is an office machine that includes the following functionality in one physical body, so as to have a printer, a copier, a fax, a scanner and etc.

MH

Modified Huffman (MH) is a compression method for decreasing the amount of data that needs to be transmitted between the fax machines to transfer the image recommended by ITU-T T.4. MH is a codebook-based run-length encoding scheme optimized to efficiently compress white space. As most faxes consist mostly of white space, this minimizes the transmission time of most faxes.

MMR

Modified Modified READ (MMR) is a compression method recommended by ITU-T T.6.

Modem

A device that modulates a carrier signal to encode digital information, and also demodulates such a carrier signal to decode transmitted information.

MR

Modified Read (MR) is a compression method recommended by ITU-T T.4. MR encodes the first scanned line using MH. The next line is compared to the first, the differences determined, and then the differences are encoded and transmitted.

NetWare

A network operating system developed by Novell, Inc. It initially used cooperative multitasking to run various services on a PC, and the network protocols were based on the archetypal Xerox XNS stack. Today NetWare supports TCP/IP as well as IPX/SPX.

OPC

Organic Photo Conductor (OPC) is a mechanism that makes a virtual image for print using a laser beam emitted from a laser printer, and it is usually green or rust colored and has a cylinder shape.
An imaging drum containing a drum slowly wears the drum surface by its usage in the printer, and it should be replaced appropriately since it gets worn from contact with the cartridge development brush, cleaning mechanism, and paper.

Originals

The first example of something, such as a document, photograph or text, etc, which is copied, reproduced or translated to produce others, but which is not itself copied or derived from something else.

OSI

Open Systems Interconnection (OSI) is a model developed by the International Organization for Standardization (ISO) for communications. OSI offers a standard, modular approach to network design that divides the required set of complex functions into manageable, self-contained, functional layers. The layers are, from top to bottom, Application, Presentation, Session, Transport, Network, Data Link and Physical.

PABX

A private automatic branch exchange (PABX) is an automatic telephone switching system within a private enterprise.

PCL

Printer Command Language (PCL) is a Page Description Language (PDL) developed by HP as a printer protocol and has become an industry standard. Originally developed for early inkjet printers, PCL has been released in varying levels for thermal, dot matrix printer, and laser printers.

PDF

Portable Document Format (PDF) is a proprietary file format developed by Adobe Systems for representing two dimensional documents in a device independent and resolution independent format.

PostScript

PostScript (PS) is a page description language and programming language used primarily in the electronic and desktop publishing areas. - that is run in an interpreter to generate an image.

Printer Driver

A program used to send commands and transfer data from the computer to the printer.

Print Media

The media like paper, labels, and transparencies which can be used in a printer, a scanner, a fax or, a copier.

PPM

Pages Per Minute (PPM) is a method of measurement for determining how fast a printer works, meaning the number of pages a printer can produce in one minute.

PRN file

An interface for a device driver, this allows software to interact with the device driver using standard input/output system calls, which simplifies many tasks.

Protocol

A convention or standard that controls or enables the connection, communication, and data transfer between two computing endpoints.

PS

See PostScript.

PSTN

The Public-Switched Telephone Network (PSTN) is the network of the world's public circuit-switched telephone networks which, on industrial premises, is usually routed through the switchboard.

RADIUS

Remote Authentication Dial In User Service (RADIUS) is a protocol for remote user authentication and accounting. RADIUS enables centralized management of authentication data such as usernames and passwords using an AAA (authentication, authorization, and accounting) concept to manage network access.

Resolution

The sharpness of an image, measured in Dots Per Inch (DPI). The higher the dpi, the greater the resolution.

SMB

Server Message Block (SMB) is a network protocol mainly applied to share files, printers, serial ports, and miscellaneous communications between nodes on a network. It also provides an authenticated Inter-process communication mechanism.

SMTP

Simple Mail Transfer Protocol (SMTP) is the standard for e-mail transmissions across the Internet. SMTP is a relatively simple, text-based protocol, where one or more recipients of a message are specified, and then the

message text is transferred. It is a client-server protocol, where the client transmits an email message to the server.

SSID

Service Set Identifier (SSID) is a name of a wireless local area network (WLAN). All wireless devices in a WLAN use the same SSID in order to communicate with each other. The SSIDs are case-sensitive and have a maximum length of 32 characters.

Subnet Mask

The subnet mask is used in conjunction with the network address to determine which part of the address is the network address and which part is the host address.

TCP/IP

The Transmission Control Protocol (TCP) and the Internet Protocol (IP); the set of communications protocols that implement the protocol stack on which the Internet and most commercial networks run.

TCR

Transmission Confirmation Report (TCR) provides details of each transmission such as job status, transmission result and number of pages sent. This report can be set to print after each job or only after failed transmissions.

TIFF

Tagged Image File Format (TIFF) is a variable-resolution bitmapped image format. TIFF describes image data that typically come from scanners. TIFF images make use of tags, keywords defining the characteristics of the image that is included in the file. This flexible and platform-independent format can be used for pictures that have been made by various image processing applications.

Toner Cartridge

A kind of bottle or container used in a machine like a printer which contains toner. Toner is a powder used in laser printers and photocopiers, which forms the text and images on the printed paper. Toner can be fused by a combination of heat/pressure from the fuser, causing it to bind to the fibers in the paper.

TWAIN

An industry standard for scanners and software. By using a TWAIN-compliant scanner with a TWAIN-compliant program, a scan can be initiated from within the program. It is an image capture API for Microsoft Windows and Apple Mac operating systems.

UNC Path

Uniform Naming Convention (UNC) is a standard way to access network shares in Window NT and other Microsoft products. The format of a UNC path is: \\<servername>\<sharename>\<Additional directory>

URL

Uniform Resource Locator (URL) is the global address of documents and resources on the Internet. The first part of the address indicates what protocol to use, the second part specifies the IP address or the domain name where the resource is located.

USB

Universal Serial Bus (USB) is a standard that was developed by the USB Implementers Forum, Inc., to connect computers and peripherals. Unlike the parallel port, USB is designed to concurrently connect a single computer USB port to multiple peripherals.

Watermark

A watermark is a recognizable image or pattern in paper that appears lighter when viewed by transmitted light. Watermarks were first introduced in Bologna, Italy in 1282; they have been used by papermakers to identify their product, and also on postage stamps, currency, and other government documents to discourage counterfeiting.

WEP

Wired Equivalent Privacy (WEP) is a security protocol specified in IEEE 802.11 to provide the same level of security as that of a wired LAN. WEP provides security by encrypting data over radio so that it is protected as it is transmitted from one end point to another.

WIA

Windows Imaging Architecture (WIA) is an imaging architecture that is originally introduced in Windows Me and Windows XP. A scan can be initiated from within these operating systems by using a WIA-compliant scanner.

WPA

Wi-Fi Protected Access (WPA) is a class of systems to secure wireless (Wi-Fi) computer networks, which was created to improve upon the security features of WEP.

WPA-PSK

WPA-PSK (WPA Pre-Shared Key) is special mode of WPA for small business or home users. A shared key, or password, is configured in the wireless access point (WAP) and any wireless laptop or desktop devices. WPA-PSK generates a unique key for each session between a wireless client and the associated WAP for more advanced security.

WPS

The Wi-Fi Protected Setup (WPS) is a standard for establishing a wireless home network. If your wireless access point supports WPS, you can configure the wireless network connection easily without a computer.

XPS

XML Paper Specification (XPS) is a specification for a Page Description Language (PDL) and a new document format, which has benefits for portable document and electronic document, developed by Microsoft. It is an XML-based specification, based on a new print path and a vector-based device-independent document format.

Index

C

cleaning
  inside 80
  outside 80
cleaning a machine 80
control panel 21
convention 11

D

driver installation 23

F

favorites settings, for printing 56
features 6
  print media feature 105
front view 19

G

general icons 11
glossary 110

H

HP Embedded Web Server 45
  general information 45

I

information
  HP Smart app 48
installation
  HP Smart app 48

J

jam
  clearing paper 84
  tips for avoiding paper jams 83

L

LED
  machine status 86
Linux
  driver installation 23
loading
  paper in the tray1 28
  special media 32

M

Mac
  driver installation 23
maintenance parts 72

N

network
  driver installation

Windows 38
IPv6 configuration 36
wired network setup 36
wireless network setup 39

O

overlay printing
create 61
delete 62
print 62

P

placing a machine
adjusting the altitude 25
print
HP Smart app 48
supplies information 88
print media
guidelines 26
labels 33
output support 105
preprinted paper 34
special media 32
X-Hvy 121-163 33
Printer Status 66
printer status
general information 66
printing
printing a document
Windows 53
special printer features 58
printing feature 58
problem
operating system problems 99
problems
paper feeding problems 89
power problems 90
printing problems 91
printing quality problems 94

R

rear view 19

S

safety
information 12
symbols 12
Smart app 48
specifications 104
print media 105
stop button 21
supplies
available supplies 70
estimated toner cartridge life 74
ordering 70
replacing toner cartridge 76
supplies information 88

T

toner cartridge
estimated life 74
handling instructions 73
non-HP and refilled 73
redistributing toner 75
replacing the cartridge 76
storing 73
tray
adjusting the width and length 27
changing the tray size 27
troubleshooting

wireless 100

U

understanding the attention LED 86
using help 57

W

watermark
create 60
delete 60
edit 60
Windows
common Windows problems 99
driver installation 23
driver installation for network connected 38
system requirements 108
wireless network
network cable 42