Deco X50-PoE
Multi-Scenario poE Mesh Wi-Fi

Wi-Fi 6

Compatible with amazon alexa

HomeShield

User Guide

AX3000 Whole Home Mesh Wi-Fi 6 System with PoE

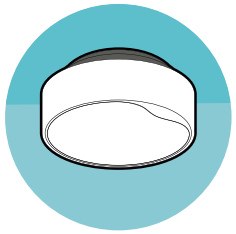

Ceiling Mount

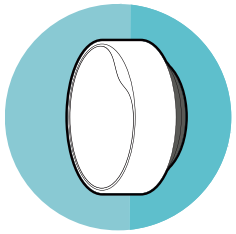

Wall Mount

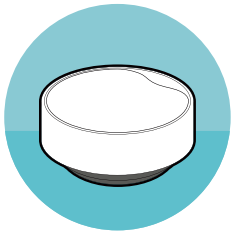

Tabletop

tp-link

1910013250 REV1.0.0 © 2022 TP-Link

Contents

About This Guide 1

Appearance 2

Power Up Your Deco 3

Set Up Your Deco Network 4

Mount Your Deco 7

Troubleshooting 11

Authentication 12

About This Guide

This guide provides a brief introduction to Whole Home Deco Mesh Wi-Fi 6 System with PoE and regulatory information.
Features available in Deco may vary by model and software version. Deco availability may also vary by region or ISP. All images, steps, and descriptions in this guide are only examples and may not reflect your actual Deco experience.

Conventions

In this guide, the following conventions are used:

Convention	Description
Deco	Stands for Deco Whole Home Mesh Wi-Fi System/ Unit.
Underline	Hyperlinks are in teal and underlined. You can click to redirect to a website or a specific section.
Teal	Key information appears in teal, including management page text such as menus, items, buttons and so on.
Note:	Ignoring this type of note might result in a malfunction or damage to the device.
Tips:	Indicates important information that helps you make better use of your device.

More Info

- Specific product information can be found on the product page at https://www.tp-link.com.
- A Technical Community is provided for you to discuss our products at https://community.tp-link.com.
- Our Technical Support contact information can be found at the Help center of the Deco app and the Contact Technical Support page at https://www.tp-link.com/support.

Speed/Coverage/Device Quantity Disclaimer

Maximum wireless signal rates are the physical rates derived from IEEE Standard 802.11 specifications. Actual wireless data throughput and wireless coverage, and quantity of connected devices are not guaranteed and will vary as a result of network conditions, client limitations, and environmental factors, including building materials, obstacles, volume and density of traffic, and client location.

MU-MIMO Disclaimer

Use of MU-MIMO requires clients to also support MU-MIMO.

IoT Compatibility Disclaimer

IoT compatibility refers only to smart devices that can be controlled via the Deco app. Other wireless devices can still connect to Deco for normal Wi-Fi use.

Seamless Roaming Disclaimer

Clients need to support 802.11k/v/r and may require additional set up. Performance may vary depending on the client device.

HomeShield Disclaimer

HomeShield includes the Free Basic Plan. Fees apply for the Pro Plan. Visit tp-link.com/homeshield for more information.

Appearance

Each Deco has an LED that changes color according to its status, one Gigabit PoE port, an advanced 2.5 Gbps PoE port, a power slot, and a reset button.

See the explanation below:

Tip: The product label can be found at the bottom of the product.

Pulse Yellow:
Deco is resetting.

Solid Yellow:
Deco is starting up.

Pulse Blue:
Deco is ready for setup.

Solid Blue:
Deco is setting up.

Pulse Green:
Deco is upgrading firmware.

Solid Green:
Deco is all set up and connected.

Pulse Red:
The satellite Deco is disconnected from the main Deco.

Solid Red:
Deco has an issue.

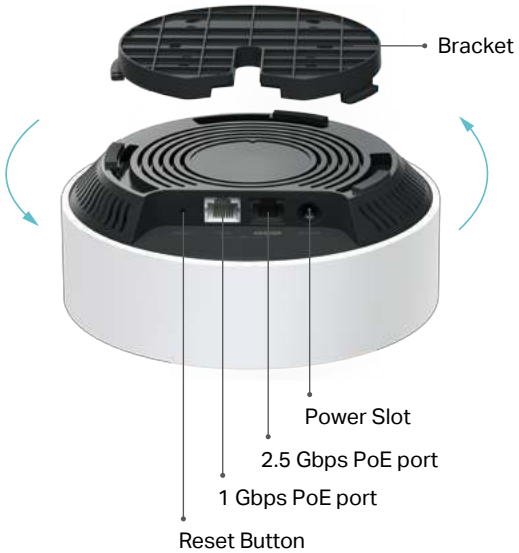

Power Supply:
Deco can be powered via a power adapter or a PSE device (such as a PoE switch).

Multi-Gig Internet Connection:
1× 2.5 Gbps port and 1× Gigabit port make full use of gigabit speeds from your local ISP. WAN/LAN support meets all your internet demands.

Reset:
Press for 1 second and release to reset Deco to factory default settings. The light changing from pulsing yellow to solid yellow indicates a successful reset.

Mounting Options

Ceiling Mount Wall Mount Tabletop

Power Up Your Deco

Deco can be powered via a power adapter or a PSE device (such as a PoE switch) which complies with Power Source Class 2 (PS2) or Limited Power Source (LPS) and Electrical Energy Source Class 1(ES1) of IEC 62368-1.

Setup Video can be found at https://www.tp-link.com/support/download/deco-x50-poe/

Option1: Via PoE Switch (Compliant with 802.3at)

Connect an Ethernet cable from the PoE switch (compliant with 802.3at) to the Deco's Ethernet port. The power should not be less than18 W.

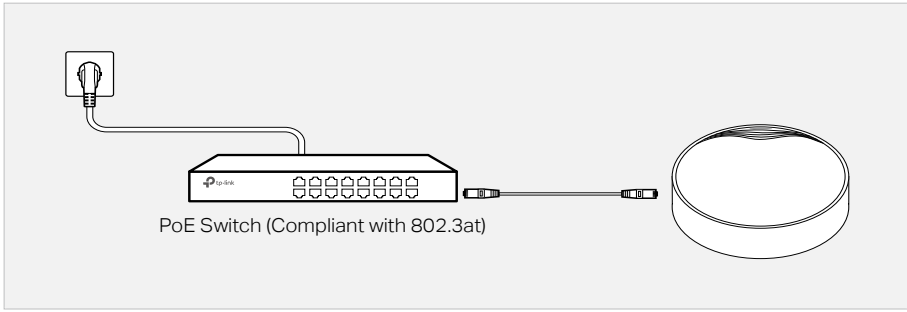

Option2: Via Power Adapter

Plug one end of the provided power adapter into the power port of the Deco and the other end to a standard electrical wall outlet.

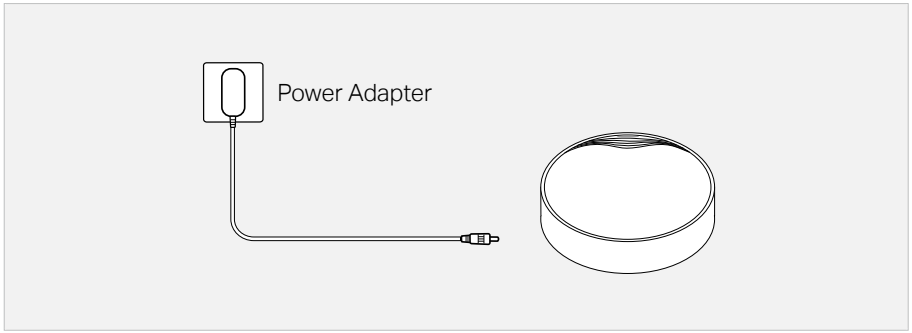

Set Up Your Deco Network

First let's start by setting up the Deco network. Get the TP-Link Deco app for iOS or Android, then follow the app to walk through the setup.

Setup Video can be found at https://www.tp-link.com/support/download/deco-x50-poe/

1. Get the Deco app

Download and install the Deco app from Google Play or App Store, or by scanning the QR code below.

or

GET IT ON Google Play

Download on the App Store

2. Log in with TP-Link ID

Open the app and log in with your TP-Link ID. If you don't have a TP-Link ID, create one first.

Tip: If you forgot your login password, tap Forgot Password. The app will help you reset your password.

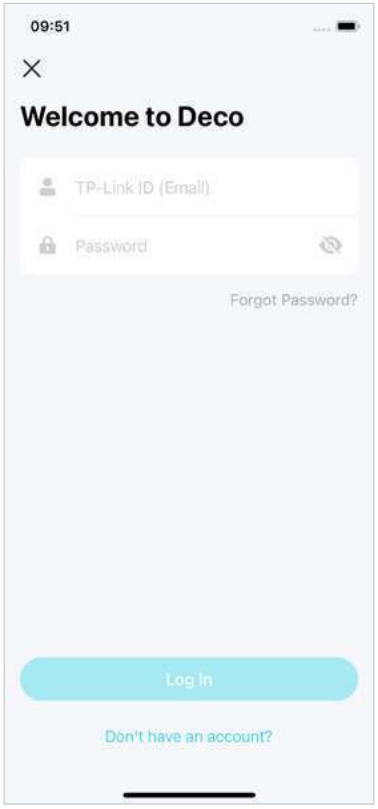

3. Select your Deco model

Search for and select your Deco model. If you have more than one Deco model, tap the question below the search box to check how to maximize the overall network.

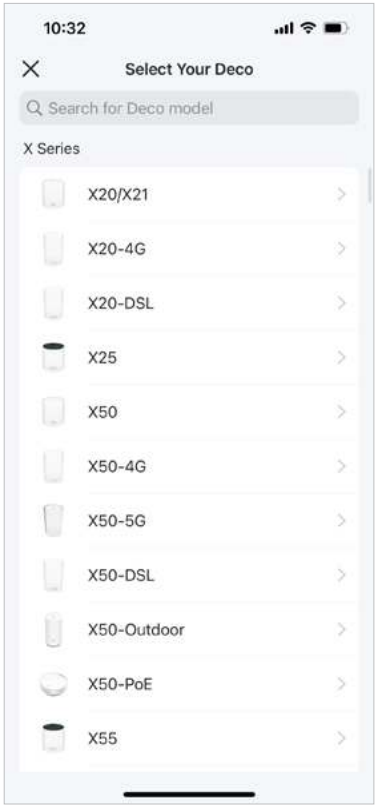

4. Plug in your Deco

Power off your modem, connect your Deco to the modem, then power them both on.

If you don't have a modem, connect your Deco directly to the Ethernet outlet.

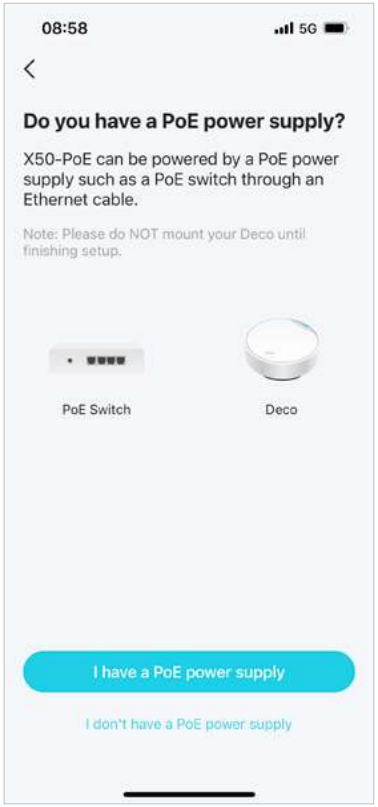

5. Specify your Deco's location

Select or custom a location for your Deco. The location will be used as the name of your Deco.

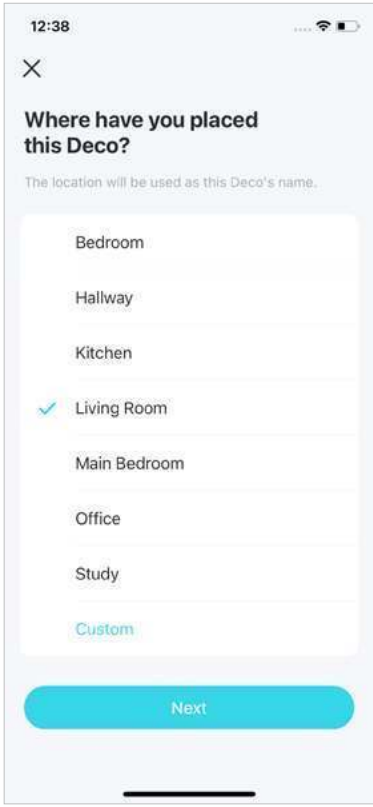

6. Connect your Deco to the internet

Select the internet connection type and enter the information. If you are not sure, contact your internet service provider.

7. Create your Deco Wi-Fi

Create the network name and password for your Deco and connect to it.

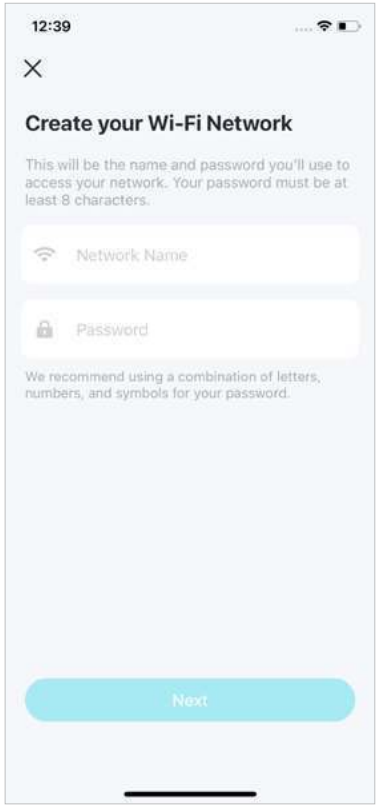

8. Setup complete

Your Deco network is now up. You can connect your devices to the Deco network.

If you have more decos, tap Add another Deco to add them to your network.

Mount Your Deco

Deco can be mounted to the wall, the ceiling, or on a junction box, using the screws in the package. Choose the appropriate mounting methods.

Mounting Video can be found at https://www.tp-link.com/support/download/deco-x50-poe/

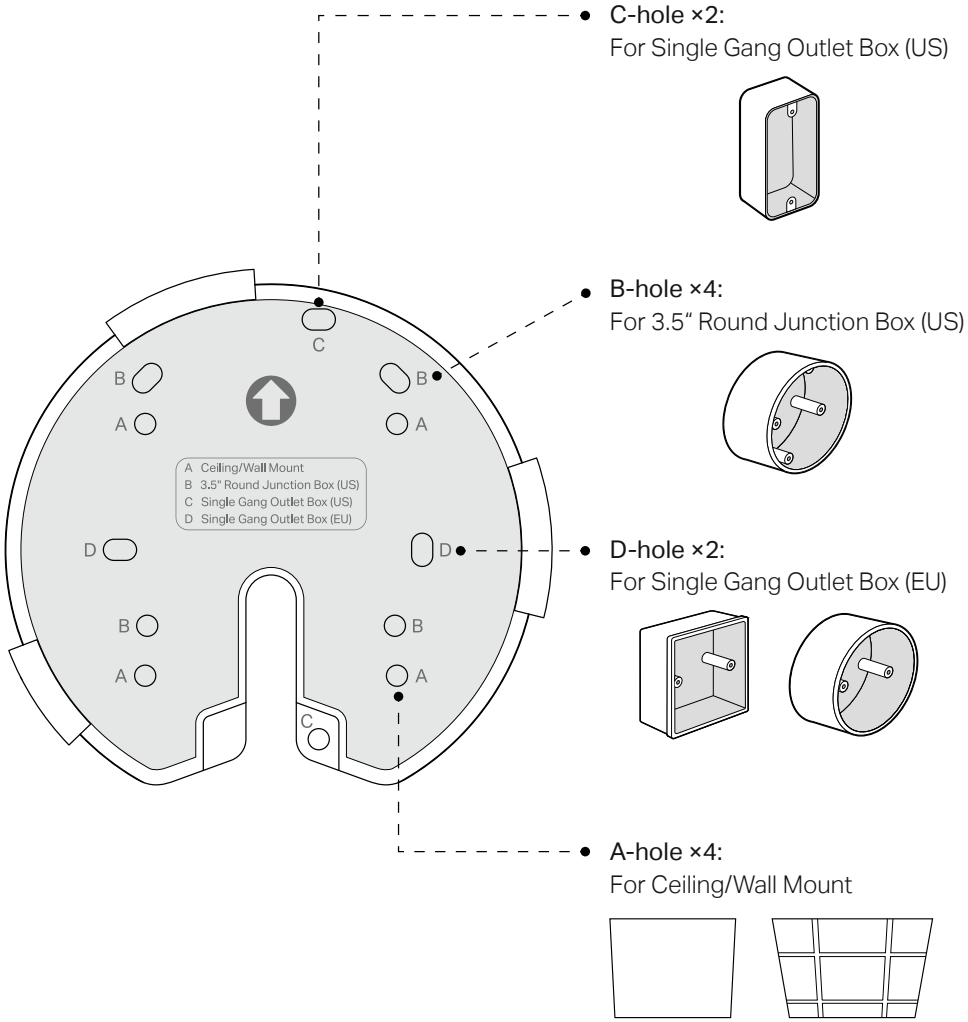

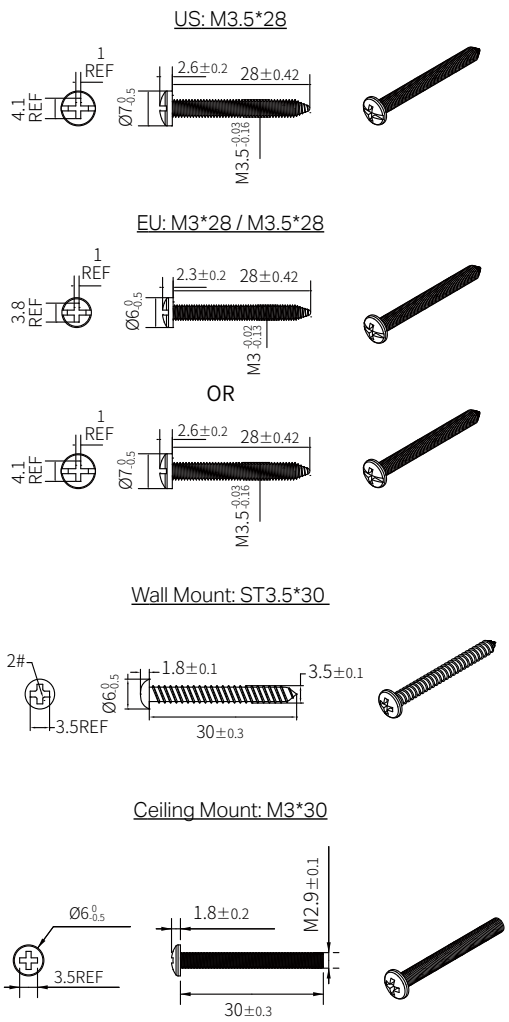

Option 1: On the Wall/Ceiling

The Deco can be mounted to the wall or the ceiling with the screws in the package.

Plastic Wall Anchors *4

Self-tapping Screws *4

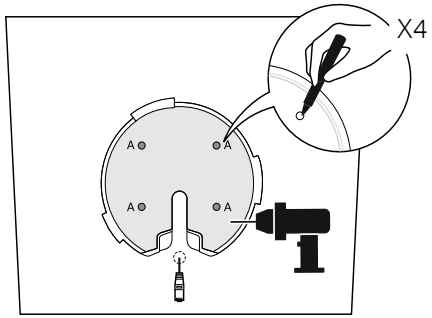

1.
If your Ethernet cable feeds through the wall, position the mounting bracket above the cable hole.

Mark four positions for the screw holes and drill four 6 mm (15/64 in) diameter holes at the marked positions.

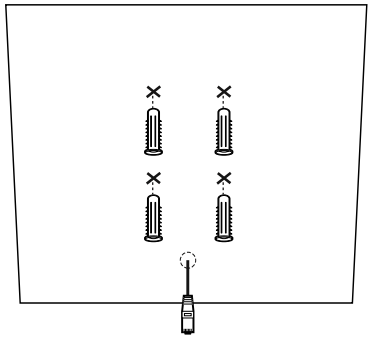

2.
Insert the plastic wall anchors into the 6 mm diameter holes.

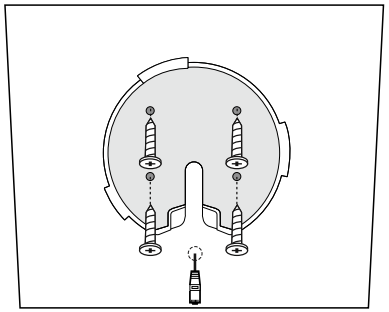

3.
Secure the mounting bracket to the wall by driving the self-tapping screws into the anchors.

Make sure the mounting bracket lies flat against the surface.

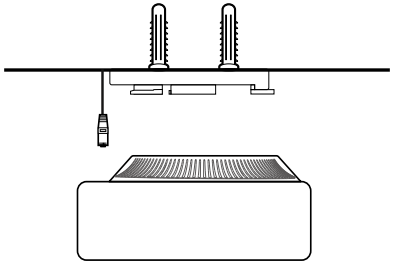

4.
Connect the Ethernet cable to the Ethernet port on the Deco.

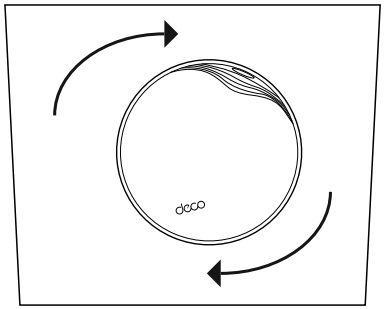

5.
Orient the Deco LED according to the image, attach the Deco to the mounting bracket, then rotate it clockwise until it locks into place.

Option 2: On a Wall Junction Box

The Deco can be mounted on a junction box. The junction box should be pre-installed with a running-in-wall Ethernet cable. Ensure that the mounting holes align to your junction box.

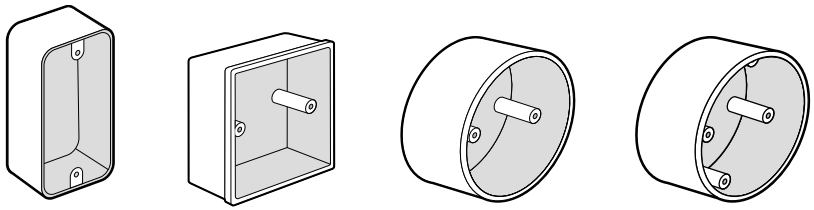

C-hole D-hole D-hole B-hole

*Here the standard US wall junction box is used as an example.

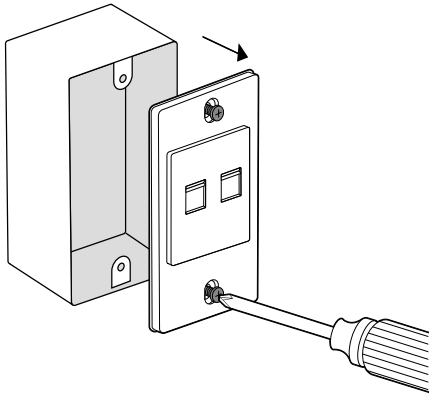

1.
Detach the faceplate of the junction box with a Phillips screwdriver.

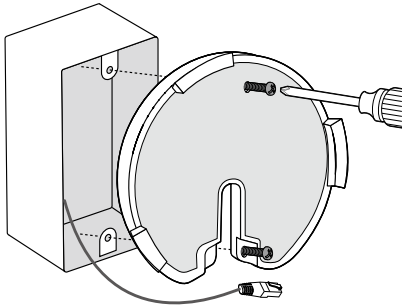

2.
Feed the Ethernet cable through the mounting bracket. Insert the enclosed screws and tighten them with a Philips screwdriver to secure the mounting bracket.

Notes:
1. Do not over tighten the screws.
2. If the enclosed screws do not fit the junction box, use the screws attached to the junction box instead.

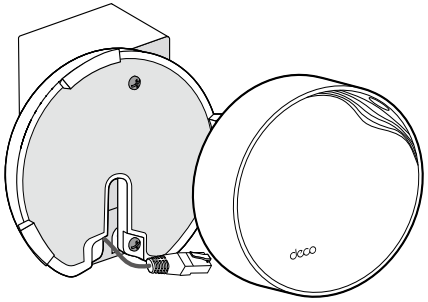

3.
Connect the Ethernet cable to the Ethernet port on the Deco.

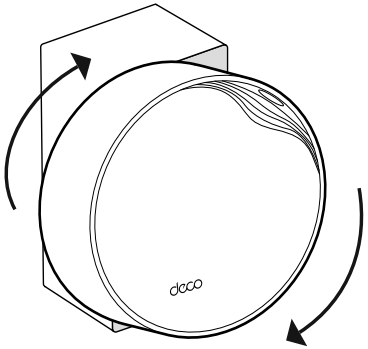

4.
Orient the Deco LED according to the image, attach the Deco to the mounting bracket, then rotate it clockwise until it locks into place.

Option 3: In a Ceiling Tile

The Deco can be installed in a ceiling tile with the screws in the package. Make sure the ceiling tile is larger than the Deco.

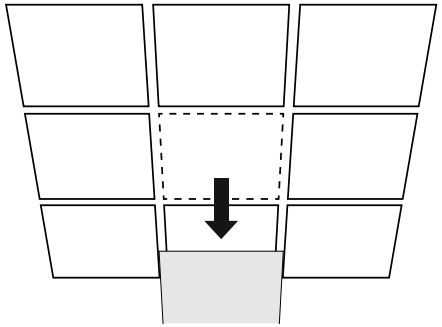

1.

Remove the ceiling tile.

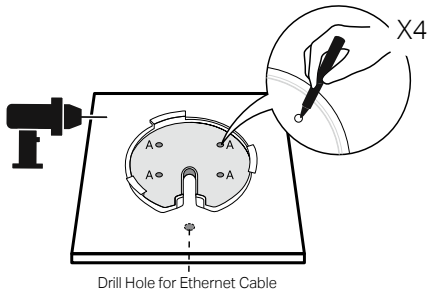

2.
Place the mounting bracket in the center of the ceiling tile. Mark four positions for the screw holes and a location for the Ethernet cable hole.

Drill four 4 mm (5/32 in) diameter holes for the screws and a 25 mm (63/64 in) diameter hole for the Ethernet cable at the marked positions.

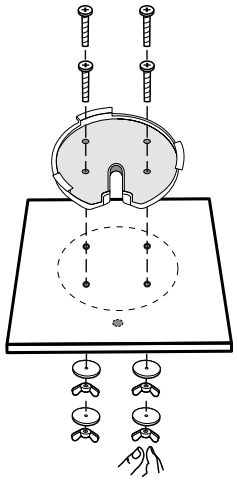

3.
Secure the mounting bracket to the ceiling tile using four pan-head screws, washers, and wing nuts.

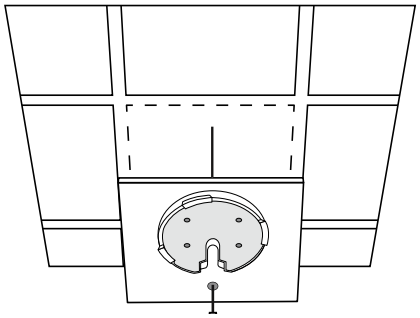

4.
Feed the Ethernet cable through the hole and set the ceiling tile back into place.

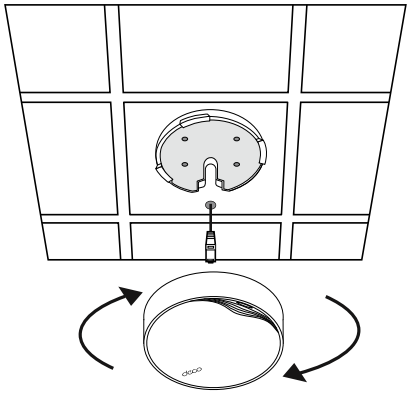

5.
Orient the Deco LED according to the image, attach the Deco to the mounting bracket, then rotate it clockwise until it locks into place.

Troubleshooting

Solutions to common problems during setup or use are provided here for reference. Follow the steps and the provided link below to diagnose and solve problems you might experience with your Deco.

If problems still exist, contact us: https://www.tp-link.com/support

Q1. What should I do if I fail to configure the main Deco and get stuck on "We couldn't find Deco"?

Refer to the guide https://www.tp-link.com/support/faq/2239/ or follow the video https://youtu.be/2HYuEYS9XJM

Q2. What should I do if I fail to configure the satellite Deco and get stuck on "We couldn't find another Deco"?

Refer to the guide https://www.tp-link.com/support/faq/1447/ or follow the video https://youtu.be/iVgDzoo16T4

Q3. What should I do if I fail to configure the main Deco and get stuck on "Testing Internet Connection"?

Refer to the video https://youtu.be/OSUrGdWH-i0

Q4. What should I do if my wireless devices cannot connect to Deco?

Refer to the guide https://www.tp-link.com/support/faq/2718/

Q5. What should I do if Deco suddenly lost internet access?

Refer to the guide https://www.tp-link.com/support/faq/1454/

Q6. How can I find a suitable spot for my Deco?

Refer to the guide https://www.tp-link.com//support/faq/1446/

Q7. What can I do if the Deco app isn't working properly?

Refer to the guide https://www.tp-link.com/support/faq/1456/

Authentication

FCC Compliance Information Statement

Product Name: AX3000 Whole Home Mesh Wi-Fi 6 System with PoE

Model Number: Deco X50-PoE

Component Name	Component Model
I.T.E POWER SUPPLY	T120150-2B4

Responsible party:

TP-Link USA Corporation

Address: 10 Mauchly, Irvine, CA 92618

Website: http://www.tp-link.com/us/

Tel: +1 626 333 0234

Fax: +1 909 527 6804

E-mail: sales.usa@tp-link.com

This equipment has been tested and found to comply with the limits for a Class B digital device, pursuant to part 15 of the FCC Rules. These limits are designed to provide reasonable protection against harmful interference in a residential installation. This equipment generates, uses and can radiate radio frequency energy and, if not installed and used in accordance with the instructions, may cause harmful interference to radio communications. However, there is no guarantee that interference will not occur in a particular installation. If this equipment does cause harmful interference to radio or television reception, which can be determined by turning the equipment off and on, the user is encouraged to try to correct the interference by one or more of the following measures:

- Reorient or relocate the receiving antenna.
- Increase the separation between the equipment and receiver.
- Connect the equipment into an outlet on a circuit different from that to which the receiver is connected.

- Consult the dealer or an experienced radio/ TV technician for help.

This device complies with part 15 of the FCC Rules. Operation is subject to the following two conditions:

1. This device may not cause harmful interference.

2. This device must accept any interference received, including interference that may cause undesired operation.

Any changes or modifications not expressly approved by the party responsible for compliance could void the user's authority to operate the equipment.

Note: The manufacturer is not responsible for any radio or TV interference caused by unauthorized modifications to this equipment. Such modifications could void the user's authority to operate the equipment.

FCC RF Radiation Exposure Statement

This equipment complies with FCC RF radiation exposure limits set forth for an uncontrolled environment. This device and its antenna must not be co-located or operating in conjunction with any other antenna or transmitter.

"To comply with FCC RF exposure compliance requirements, this grant is applicable to only Mobile Configurations. The antennas used for this transmitter must be installed to provide a separation distance of at least 20 cm from all persons and must not be co-located or operating in conjunction with any other antenna or transmitter."

FCC Compliance Information Statement

Product Name: I.T.E POWER SUPPLY

Model Number: T120150-2B4

Responsible party:

TP-Link USA Corporation

Address: 10 Mauchly, Irvine, CA 92618

Website: http://www.tp-link.com/us/

Tel: +1 626 333 0234

Fax: +1 909 527 6804

E-mail: sales.usa@tp-link.com

This equipment has been tested and found to comply with the limits for a Class B digital device, pursuant to part 15 of the FCC Rules. These limits are designed to provide reasonable protection against harmful interference in a residential installation. This equipment generates, uses and can radiate radio frequency energy and, if not installed and used in accordance with the instructions, may cause harmful interference to radio communications. However, there is no guarantee that interference will not occur in a particular installation. If this equipment does cause harmful interference to radio or television reception, which can be determined by turning the equipment off and on, the user is encouraged to try to correct the interference by one or more of the following measures:

- Reorient or relocate the receiving antenna.
- Increase the separation between the equipment and receiver.
- Connect the equipment into an outlet on a circuit different from that to which the receiver is connected.
- Consult the dealer or an experienced radio/ TV technician for help.

This device complies with part 15 of the FCC Rules. Operation is subject to the following two conditions:

1. This device may not cause harmful interference.
2. This device must accept any interference received, including interference that may cause undesired operation.

Any changes or modifications not expressly approved by the party responsible for compliance could void the user's authority to operate the equipment.

We, TP-Link USA Corporation, has determined that the equipment shown as above has been shown to comply with the applicable technical standards, FCC part 15. There is no unauthorized change is made in the equipment and the equipment is properly maintained and operated.

Issue Date: 2022-10-31

CE Mark Warning

This is a class B product. In a domestic environment, this product may cause radio interference, in which case the user may be required to take adequate measures.

OPERATING FREQUENCY(the maximum transmitted power)

2400 MHz -2483.5 MHz (20dBm)

5150 MHz -5250 MHz (23dBm)

5250 MHz -5350 MHz (23dBm)

EU Declaration of Conformity

TP-Link hereby declares that the device is in compliance with the essential requirements and other relevant provisions of directives 2014/53/EU, 2009/125/EC, 2011 /65/EU and (EU) 2015/863.

The original EU Declaration of Conformity may be found at https://www.tp-link.com/en/support/ce/

RF Exposure Information

This device meets the EU requirements (2014/53/EU Article 3.1a) on the limitation of exposure of the general public to electromagnetic fields by way of health protection.

The device complies with RF specifications when the device used at 20 cm from your body.

National restrictions

Attention: This device may only be used indoors in all EU member states and EFTA countries, and Northern Ireland.

	AT	BE	BG	CH	CY	CZ	DE	DK
	EE	EL	ES	FI	FR	HR	HU	IE
	IS	IT	LI	LT	LU	LV	MT	NL
	NO	PL	PT	RO	SE	SI	SK	UK(NI)

UKCA Mark

UK
CA

UK Declaration of Conformity

TP-Link hereby declares that the device is in compliance with the essential requirements and other relevant provisions of the Radio Equipment Regulations 2017.

The original UK Declaration of Conformity may be found at https://www.tp-link.com/support/ukca/

National restrictions

Attention: This device may only be used indoors in Great Britain.

!	UK

Canadian Compliance Statement

This device complies with Industry Canada license-exempt RSS standard(s). Operation is subject to the following two conditions:

1. This device may not cause interference, and
2. This device must accept any interference, including interference that may cause undesired operation of the device.

Le présent appareil est conforme aux CNR d'Industrie Canada applicables aux appareils radio exempts de licence. L'exploitation est autorisée aux deux conditions suivantes :

1. l'appareil ne doit pas produire de brouillage;
2. l'utilisateur de l'appareil doit accepter tout brouillage radioélectrique subi, meme si le brouillage est susceptible d'en compromettre le fonctionnement.

Caution:

The device for operation in the band 5150–5250 MHz is only for indoor use to reduce the potential for harmful interference to co-channel mobile satellite systems;

DFS (Dynamic Frequency Selection) products that operate in the bands 5250- 5350 MHz.

Avertissement:

Le dispositif fonctionnant dans la bande 5150-5250 MHz est réservé uniquement pour une utilisation à l'intérieur afin de réduire les risques de brouillage préjudiciable aux systèmes de satellites mobiles utilisant les mêmes canaux;

Les produits utilisant la technique d'atténuation DFS (sélection dynamique des fréquences) sur les bandes 5250- 5350 MHz.

Radiation Exposure Statement:

This equipment complies with IC radiation exposure limits set forth for an uncontrolled environment. This equipment should be installed and operated with minimum distance 20cm between the radiator & your body.

Déclaration d'exposition aux radiations:

Cet équipement est conforme aux limites d'exposition aux rayonnements IC établies pour un environnement non contrôlé. Cet équipement doit être installé et utilisé avec un minimum de 20 cm de distance entre la source de rayonnement et votre corps.

Industry Canada Statement

CAN ICES-3 (B)/NMB-3(B)

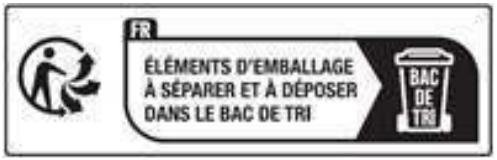

Korea Warning Statements:

당해 무선설비는 운용중 전파혼신 가능성이 있음.

NCC Notice & BSMI Notice:

注意！

取得審驗證明之低功率射頻器材，非經核准，公司、商號或使用者均不得擅自變更頻率、加大功率或變更原設計之特性及功能。

低功率射頻器材之使用不得影響飛航安全及干擾合法通信；經發現有干擾現象時，應立即停用，並改善至無干擾時方得繼續使用。

前述合法通信，指依電信管理法規定作業之無線電通信。

低功率射頻器材須忍受合法通信或工業、科學及醫療用電波輻射性電機設備之干擾。

應避免影響附近雷達系統之操作。

安全諮詢及注意事項

- 請按照本產品注明的電源類型使用本產品。
- 清潔本產品之前請先切斷電源。請勿使用液體、噴霧清潔劑或濕布進行清潔。
- 注意防潮，請勿將水或其他液體潑灑到本產品上。
- 插槽與開口供通風使用，以確保本產品的操作可靠並防止過熱，請勿堵塞或覆蓋開口。
- 請勿將本產品置放於靠近熱源的地方。除非有正常的通風，否則不可放在密閉位置中。
- 不要私自拆開機殼或自行維修，如產品有故障請與原廠或代理商聯繫。

限用物質含有情況標示聲明書

設備名稱： Equipment name: AX3000 Whole Home Mesh Wi-Fi 6 System with PoE	型號（型式）： Type designation (Type) Deco X50-PoE					
單元 Unit	限用物質及其化學符號 Restricted substances and its chemical symbols					
	鉛 Lead (Pb)	汞 Mercury (Hg)	鎘 Cadmium (Cd)	六價鉻 Hexavalent chromium (Cr^{+6})	多溴聯苯 Polybrominated biphenyls (PBB)	多溴二苯醚 Polybrominated diphenyl ethers (PBDE)
PCB	○	○	○	○	○	○

外殼	○	○	○	○	○	○
電源供應器	—	○	○	○	○	○
其他及其配件	—	○	○	○	○	○

備考1. 超出0.1 wt %” 及 “超出0.01 wt %” 系指限用物質之百分比含量超出百分比含量基準值。

Note 1：“Exceeding 0.1 wt %” and “exceeding 0.01 wt %” indicate that the percentage content of the restricted substance exceeds the reference percentage value of presence condition.

備考2. “○” 系指該項限用物質之百分比含量未超出百分比含量基準值。

Note 2：“○” indicates that the percentage content of the restricted substance does not exceed the percentage of reference value of presence.

備考3. “ — ” 系指該項限用物質為排除項目。

Note 3：The “ — ” indicates that the restricted substance corresponds to the exemption.

Продукт сертифіковано згідно с правилами системи УкрСЕПРО на відповідність вимогам нормативних документів та вимогам, що передбачені чинними законодавчими актами України.

Safety Information

- Keep the device away from water, fire, humidity or hot environments.
- Do not attempt to disassemble, repair, or modify the device. If you need service, please contact us.
- Do not use damaged charger or USB cable to charge the device.
- Do not use any other chargers than those recommended.
- Do not use the device where wireless devices are not allowed.
- Adapter shall be installed near the equipment and shall be easily accessible.
- This product uses radios and other components that emit electromagnetic fields. Electromagnetic fields and magnets may interfere with pacemakers and other implanted medical devices. Always keep the product and its power adapter more than 15 cm (6 inches) away from any

pacemakers or other implanted medical devices. If you suspect your product is interfering with your pacemaker or any other implanted medical device, turn off your product and consult your physician for information specific to your medical device.

- Use only power supplies which are provided by manufacturer and in the original packing of this product. If you have any questions, please don't hesitate to contact us.
- Operating Temperature: 0°C~40°C (32°F~104°F)

Please read and follow the above safety information when operating the device. We cannot guarantee that no accidents or damage will occur due to improper use of the device. Please use this product with care and operate at your own risk.

Explanation of the symbols on the product label

Symbol	Explanation
	Alternating current
	DC voltage
	Caution
	Operator's manual
	Indoor use only
	Class II equipment
	Energy efficiency Marking
	Polarity of d.c. power connector
	RECYCLING This product bears the selective sorting symbol for Waste electrical and electronic equipment (WEEE). This means that this product must be handled pursuant to European directive 2012/19/EU in order to be recycled or dismantled to minimize its impact on the environment. User has the choice to give his product to a competent recycling organization or to the retailer when he buys a new electrical or electronic equipment.