NEC

User's Manual

Large Format Display

MultiSync® M751

MultiSync® M861

MODEL: M751, M861

Please find your model name on the label on the rear side of the monitor.

Table of Contents

Important Information 2
Recommended Use & Maintenance 8
Recommended Use 8
Maintenance 8

Features

Chapter 1 Installation

Setup Overview 11
Mounting (for Customer) 14
Mounting (for Trained Installers) 15
Mounting Location 16
Orientation 17
Ventilation Requirements 18
Mounting on Ceilings 18
Attaching Mounting Accessories 19
Installing and Removing the Optional Table Top Stand 20

Chapter 2 Parts Names and Functions

Control Panel 22
Terminal Panel 23
Wireless Remote Control 25

Chapter 3 Connections

Wiring Diagram 28
Connecting to a Personal Computer 29
Connecting to a Media Device with HDMI 29
HDMI-CEC Command 31
HDMI-CEC Remote Control button functions 32
Internal Video Sources 33
Option Boards for the Monitor 33
Connecting a USB Device 34

Chapter 4 Basic Operation

Power ON and OFF Modes 36
Operating Range for the Remote Control 37
Using Power Management 37
Showing the Information OSD 38
Switching Between Picture Modes 38
Setting the Aspect Ratio 39
Using Point Zoom 40
OSD (On-Screen Display) Controls 41

Chapter 5 Advanced Operation

Creating a Power Schedule 44
Advanced Color Adjustment 45
Using the SpectraView Engine 45
Using Stand-alone calibration..... 48
Using Other Picture Modes 51
Setting Security and Locking the Monitor Controls... 52
Password Security..... 52
Locking the Button Controls 54

Chapter 6 Multi-Monitor Setup

Connecting Multiple Monitors 57
Video Out Connection 60
Setting the Remote Control ID Function..... 61

Chapter 7 External Control

Controlling the Monitor via RS-232C 63
Controlling the Monitor via LAN..... 64
Multiple Monitors Connection 65
HTTP Browser 66
OSD Menu Settings in the Monitor Web controls 67
Network Settings 68
Commands 73
Proof of Play 74

Chapter 8 Troubleshooting

Screen Image and Video Signal Issues..... 76
Hardware Issues..... 77

Chapter 9 Specifications

Compatible signal list..... 80
M751..... 81
M861..... 82

Appendix A Trademark and Software License

Appendix B External Resources

Appendix C OSD Controls List

INPUT 87
PICTURE 90
AUDIO 97
SCHEDULE 98
SLOT 99
NETWORK 101
PROTECT 102
SYSTEM 104

Appendix D Manufacturer's Recycling and Energy Information

Disposing of your old NEC product 110
Energy Saving 110

Cable Information

CAUTION: Use the provided specified cables with this product so as not to interfere with radio and television reception.
For USB, please use a shielded signal cable with ferrite core.
For HDMI, RS-232C and DisplayPort, please use a shielded signal cable.
Use of other cables and adapters may cause interference with radio and television reception.

FCC Information

WARNING: The Federal Communications Commission does not allow any modifications or changes to the unit EXCEPT those specified by Sharp NEC Display Solutions of America, Inc. in this manual. Failure to comply with this government regulation could void your right to operate this equipment.

This equipment has been tested and found to comply with the limits for a Class B digital device, pursuant to part 15 of the FCC Rules. These limits are designed to provide reasonable protection against harmful interference in a residential installation. This equipment generates, uses, and can radiate radio frequency energy, and, if not installed and used in accordance with the instructions, may cause harmful interference to radio communications. However, there is no guarantee that interference will not occur in a particular installation. If this equipment does cause harmful interference to radio or television reception, which can be determined by turning the equipment off and on, the user is encouraged to try to correct the interference by one or more of the following measures:

- Reorient or relocate the receiving antenna.
- Increase the separation between the equipment and receiver.
- Connect the equipment into an outlet on a circuit different from that to which the receiver is connected.
- Consult your dealer or an experienced radio/TV technician for help.

If necessary, the user should contact the dealer or an experienced radio/television technician for additional suggestions.
The user may find the following booklet, prepared by the Federal Communications Commission, helpful: “How to Identify and Resolve Radio-TV Interference Problems.” This booklet is available from the U.S. Government Printing Office, Washington, D.C., 20402, Stock No. 004-000-00345-4.

SUPPLIER’S DECLARATION OF CONFORMITY

This device complies with Part 15 of the FCC Rules. Operation is subject to the following two conditions. (1) This device may not cause harmful interference, and (2) this device must accept any interference received, including interference that may cause undesired operation.

U.S. Responsible Party:	**Sharp NEC Display Solutions of America, Inc.**
Address:	**3250 Lacey Rd, Ste 500** **Downers Grove, IL 60515**
Tel. No.:	**(630) 467-3000**
Type of Product:	LCD Monitor
Equipment Classification:	Class B Peripheral
Model:	M751, M861

(For Customers in U.K.)

IMPORTANT

- The wires in this mains lead are coloured in accordance with the following code:

GREEN-AND-YELLOW:	**“Earth”**
BLUE:	**“Neutral”**
BROWN:	**“Live”**

- As the colours of the wires in the mains lead of this apparatus may not correspond with the coloured markings identifying the terminals in your plug proceed as follows:
  - The wire which is coloured GREEN-AND-YELLOW must be connected to the terminal in the plug which is marked by the letter **E** or by the safety earth symbol ⏚ or coloured green or green-and-yellow.
  - The wire which is coloured BLUE must be connected to the terminal which is marked with the letter **N** or coloured black.
  - The wire which is coloured BROWN must be connected to the terminal which is marked with the letter **L** or coloured red.
- Ensure that your equipment is connected correctly. If you are in any doubt consult a qualified electrician.

“WARNING: THIS APPARATUS MUST BE EARTHED.”

NOTE: (1) The contents of this manual may not be reprinted in part or whole without permission.
(2) The contents of this manual are subject to change without notice.
(3) Great care has been taken in the preparation of this manual; however, should you notice any questionable points, errors or omissions, please contact us.
(4) The image shown in this manual is indicative only. If there is inconsistency between the image and the actual product, the actual product shall govern.
(5) Notwithstanding articles (3) and (4), we will not be responsible for any claims on loss of profit or other matters deemed to result from using this device.
(6) This manual is commonly provided to all regions so they may contain descriptions that are pertinent for other countries.

Important Information

Safety Precautions and Maintenance

FOR OPTIMUM PERFORMANCE, PLEASE NOTE
THE FOLLOWING WHEN SETTING UP AND
USING THE LCD COLOR MONITOR:

About the Symbols

To ensure safe and proper use of the product, this manual uses a number of symbols to prevent injury to you and others as well as damage to property. The symbols and their meanings are described below. Be sure to understand them thoroughly before reading this manual.

WARNING	Failing to heed this symbol and handling the product incorrectly could result in accidents leading to major injury or death.
CAUTION	Failing to heed this symbol and handling the product incorrectly could result in personal injury or damage to surrounding property.

Examples of symbols

	Indicates a warning or caution. This symbol indicates you should be careful of electric shocks.
	Indicates a prohibited action. This symbol indicates something that must be prohibited.
	Indicates a mandatory action. This symbol indicates that the power cord should be unplugged from the power outlet.

		WARNING
1	UNPLUG THE POWER CORD	Unplug the power cord if the product malfunctions. Should the product emit smoke or strange odors or sounds, or if the product has been dropped or the cabinet broken, turn off the product's power, then unplug the power cord from the power outlet. Contact your dealer for repairs. Never try to repair the product on your own. Doing so is dangerous.
2	HAZARDOUS VOLTAGE DO NOT DISASSEMBLE PROHIBITED	Do not open or remove the product's cabinet. Do not disassemble the product. There are high voltage areas in the product. Opening or removing product covers and modifying the product may expose you to electric shock, fire, or other risks. Refer all servicing to qualified service personnel.
3	PROHIBITED	Do not use the product if it has structural damage. If you notice any structural damage such as cracks or unnatural wobbling, please refer servicing to qualified service personnel. If the product is used in this condition, the product may fall or cause personal injury.

WARNING		
4	PROHIBITED REQUIRED	Handle the power cord with care. Damaging the cord could lead to fire or electric shock. • Do not place heavy objects on the cord. • Do not place the cord under the product. • Do not cover the cord with a rug, etc. • Do not scratch or modify the cord. • Do not bend, twist or pull the cord with excessive force. • Do not apply heat to the cord. If the cord gets damaged (exposed core wires, broken wires, etc.), turn off the product's power, then unplug the power cord from the power outlet. Ask your dealer to replace it.
5	PROHIBITED	Do not touch the power plug if you hear thunder. Doing so could result in electric shock.
6	REQUIRED	Please use the power cord provided with this product in accordance with the power cord table. If a power cord is not supplied with this product, please contact us. For all other cases, please use the power cord with the plug style that matches the power socket where the product is located. The compatible power cord corresponds to the AC voltage of the power outlet and has been approved by, and complies with, the safety standards in the country of purchase.
7	REQUIRED	For proper installation it is strongly recommended to use a trained service person. Failure to follow the standard installation procedures could result in damage to the product or injury to the user or installer.
8	REQUIRED PROHIBITED	Please install the product in accordance with the following information. This product cannot be used or installed without the table top stand or other mounting accessory for support. When transporting, moving, or installing the product, please use as many people as necessary to be able to lift the product without causing personal injury or damage to the product. • We recommend four or more people. • Four handles are required when transporting. Please refer to the instructions included with the optional mounting equipment for detailed information about attaching or removing. Do not cover the vent on the product. Improper installation of the product may result in damage to the product, an electric shock or fire. Do not install the product in the locations below: • Poorly ventilated spaces. • Near a radiator, other heat sources, or in direct sunshine. • Continual vibration areas. • Humid, dusty, steamy, or oily areas. • Outdoors. • High-temperature environment where humidity changes rapidly and condensation is likely to occur. • A ceiling or wall that is not strong enough to support the product and mounting accessories. Do not mount the product upside down.

WARNING

9	PROHIBITED REQUIRED	Prevent tipping and falling for earthquakes or other shocks. To prevent personal injury or damage to the product caused by tipping over due to earthquakes or other shocks, make sure to install the product in a stable location and take measures to prevent falling. The measures to prevent falling and tipping are intended for reducing the risk of injury, but may not guarantee the effectiveness against all earthquakes. 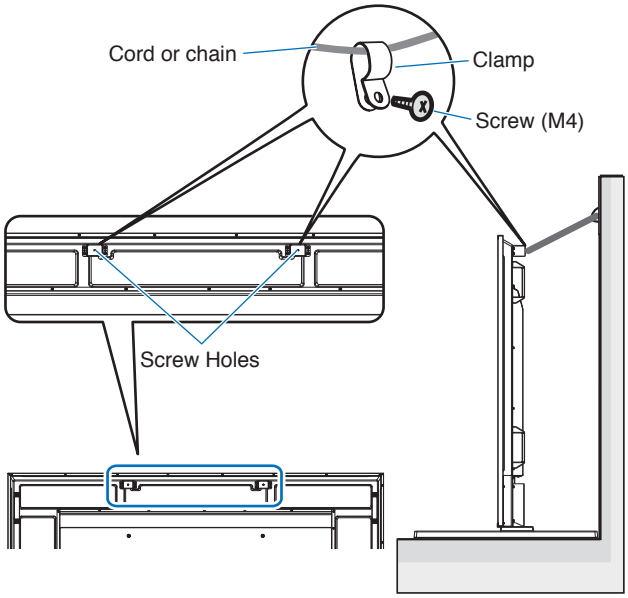 **The product may tip causing personal injury.** • When using the product with the optional table top stand, fasten the product to a wall using a cord or chain that can support the weight of the product in order to prevent the product from falling. Depending on the table top stand, the stand has the structure for preventing tipping. Please refer to the table top stand manual. • Be sure to remove the cord or chain from the wall before moving the product to prevent personal injury or damage to the product. **The product may fall causing personal injury.** • Do not attempt to hang the product using an installation safety wire. • Please install the product in an area on the wall or ceiling strong enough to support the weight of the product. • Prepare the product using mounting accessories, such as hook, eyebolt, or mounting parts, and then secure the product with a safety wire. The safety wire must not be tight. • Please make sure the mounting accessories are strong enough to support the product weight and size before installing it. Stability Hazard. The product may fall, causing serious personal injury or death. To prevent injury, this product must be securely attached to the floor/wall in accordance with the installation instructions. Many injuries, particularly to children, can be avoided by taking simple precautions such as: • ALWAYS use stands or installation methods recommended by the manufacturer of the product set. • ALWAYS use furniture that can safely support the product. • ALWAYS ensure the product is not overhanging the edge of the supporting furniture. • ALWAYS educate children about the dangers of climbing on furniture to reach the product or its controls. • ALWAYS route cords and cables connected to your product so they cannot be tripped over, pulled or grabbed. • NEVER place a product in an unstable location.

WARNING		
9	PROHIBITED REQUIRED	• NEVER place the product on tall furniture (for example, cupboards or bookcases) without anchoring both the furniture and the product to a suitable support. • NEVER place the product on cloth or other materials that may be located between the product and supporting furniture. • NEVER place items that might tempt children to climb, such as toys and remote controls, on the top of the product or furniture on which the product is placed. If the existing product is going to be retained and relocated, the same considerations as above should be applied.
10	PROHIBITED	Do not place this product on a sloping or unstable cart, stand or table. Doing so could lead to falling or tipping and cause personal injury.
11	PROHIBITED HAZARDOUS VOLTAGE	Do not insert objects of any kind into the cabinet slots. It may cause electric shock, fire, or product failure. Keep objects away from children and babies. If objects get into the cabinet slot, turn off the product's power, then unplug the power cord from the power outlet. Contact your dealer for repairs.
12	DO NOT WET	Do not spill any liquids into the cabinet or use your product near water. Immediately turn off the power and unplug your product from the wall outlet, then refer servicing to qualified service personnel. It may cause an electric shock or start a fire.
13	PROHIBITED	Do not use flammable gas sprays to remove dust when cleaning the product. Doing so could lead to a fire.
14	PROHIBITED	Usage of the product must not be accompanied by fatal risks or dangers that, could lead directly to death, personal injury, severe physical damage or other loss, including nuclear reaction control in nuclear facility, medical life support system, and missile launch control in a weapon system.
15	REQUIRED	Securely fasten the Option Board. Ensure the Option Board is securely fastened using the original screws to prevent the Option Board from falling out the product. A falling Option Board may expose you to danger.

CAUTION		
1	REQUIRED DO NOT TOUCH WITH WET HANDS UNPLUG THE POWER CORD HAZARDOUS VOLTAGE	Handling the power cord. Handle the power cord with care. Damaging the cord could lead to fire or electric shock. • When connecting the power cord to the product's AC IN terminal, make sure the connector is fully and firmly inserted. • Fasten the power cord to the product by attaching the screw and clamp to prevent loose connection. (Recommended Fasten Force: 120 - 190 N•cm). • Do not connect or disconnect the power cord with wet hands. • When connecting or disconnecting the power cord, pull the power cord out by holding onto its plug. • When cleaning the product, for safety purposes, unplug the power cord from the power outlet beforehand. Regularly dust off the power cord by using a soft dry cloth. • Before moving the product, make sure the product power is off, then unplug the power cord from the power outlet and check that all cables connecting the product to other devices are disconnected. • When you are not planning to use the product for an extended period of time, always unplug the power cord from the power outlet. • This equipment is designed to be used in the condition of the power cord connected to the earth. If the power cord is not connected to the earth, it may cause electric shock. Please make sure the power cord is connected to the wall outlet directly and earthed properly. Do not use a 2-pin plug converter adapter.
2	PROHIBITED REQUIRED	Do not bind the power cord and the USB cable. It may trap heat and cause a fire.
3	PROHIBITED	Do not connect to a LAN with excessive voltage. When using a LAN cable, do not connect to a peripheral device with wiring that might have excessive voltage. Excessive voltage on the LAN port may cause an electric shock.
4	PROHIBITED	Do not climb on the table where the product is installed. Do not install the product on a wheeled table if the wheels on the table have not been properly locked. The product may fall, causing damage to the product or personal injury.
5	REQUIRED	Installation, removal, and height adjustment of the optional table top stand. • When installing the table top stand, handle the unit with care to avoid pinching your fingers. • Installing the product at the wrong height can cause tipping. Please install your product at proper height to prevent personal injury or damage to the product.
6	PROHIBITED	Do not push or climb on the product. Do not grab or hang onto the product. The product may fall, causing damage to the product or personal injury.
7	PROHIBITED	Do not impact the LCD panel surface. It can cause serious damage to the product or personal injury.

CAUTION		
8	REQUIRED	Incorrect usage of batteries can result in leaks or bursting. • Insert batteries matching the (+) and (–) signs on each battery to the (+) and (–) signs of the battery compartment. • Do not mix battery brands. • Do not combine new and old batteries. This can shorten battery life or cause liquid leakage of batteries. • Remove dead batteries immediately to prevent battery acid from leaking into the battery compartment. • Do not touch exposed battery acid, it may injure your skin. • Disposal of a battery into fire or a hot oven, or mechanically crushing or cutting of a battery, that can result in an explosion. • Leaving a battery in an extremely high temperature surrounding environment, or a battery subject to extremely low air pressure, that can result in an explosion or the leakage of flammable liquid or gas. • Contact your dealer or local authorities when disposing of batteries.
9	REQUIRED	Suitable for entertainment purposes at controlled luminous environments, to avoid disturbing reflections from the screen.
10	REQUIRED	When running the cooling fan continuously, we recommend wiping clean the ventilation holes a minimum of once a month. Failure to do so could lead to fire or electric shock or damage to the product.
11	REQUIRED	To ensure the product's reliability, please clean the ventilation holes at the rear side of the cabinet at least once a year to remove dirt and dust. Failure to do so could lead to fire or electric shock or damage to the product.
12	REQUIRED	Avoid locations with extreme temperatures and humidity. Failure to do so could lead to fire or electric shock or damage to the product. The usage environment for this product is as follows: • The operating temperature: 0 °C to 40 °C/32 °F to 104 °F/ humidity: 20 to 80% (without condensation) • The storage temperature: -20 °C to 60 °C/-4 °F to 140 °F/ humidity: 10 to 80% (without condensation)

Power Cord Table

Plug Type	North America	European Continental	U.K.	Chinese	Japanese
Plug Shape	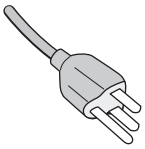	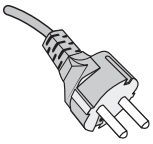	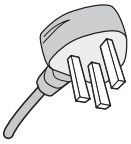	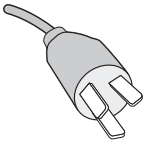	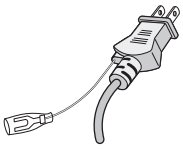
Region	U.S.A./Canada	EU	U.K.	China	Japan
Voltage	120*	230	230	220	100

* Please use this power cord under 125 V power supply.

NOTE: This product can only be serviced in the country where it was purchased.

Recommended Use & Maintenance

Recommended Use

Ergonomics

To realize the maximum ergonomic benefits, we recommend the following:

- For optimum performance of the monitor, allow 20 minutes for warming up. Avoid reproduction of still patterns on the monitor for long periods of time to avoid image persistence (after image effects).
- Rest your eyes periodically by focusing on an object at least 5 feet away. Blink often.
- Position the monitor at a 90° angle to windows and other light sources to minimize glare and reflections.
- Adjust the monitor's brightness, contrast and sharpness controls to enhance readability.
- Get regular eye checkups.
- Use the preset Size and Position controls with standard input signals.
- Use the preset color settings.
- Use non-interlaced signals.
- Do not view the primary color blue on a dark background. It is difficult to see and may cause eye fatigue due to insufficient contrast.

Maintenance

Cleaning the LCD Screen

- When the LCD screen is dusty, please gently wipe with a soft cloth.
- Clean the LCD screen surface with a lint-free, non-abrasive cloth. Avoid using any cleaning solution or glass cleaner!
- Please do not rub the LCD screen with a hard or abrasive material.
- Please do not apply pressure to the LCD screen surface.
- Please do not use OA cleaner as it will cause deterioration or discoloration on the LCD screen surface.

Cleaning the Cabinet

- Unplug the power supply.
- Gently wipe the cabinet with a soft cloth.
- To clean the cabinet, dampen the cloth with a neutral detergent and water, wipe the cabinet and follow with a dry cloth.

NOTE: DO NOT clean with benzene thinner, alkaline detergent, alcoholic system detergent, glass cleaner, wax, polish cleaner, soap powder, or insecticide. Rubber or vinyl should not be in contact with the cabinet for an extended period of time. These types of fluids and materials can cause the paint to deteriorate, crack or peel.

Features

- **High definition**
  - **UHD panel employed**
    The high-resolution 4K display (3840 x 2160), which boasts four times the pixel resolution of full-HD displays, enables precise reproduction of details in 4K video and high-resolution images.
  - **8K Solution**
    Supports 8K signals. (Input via DisplayPort 1 only)

    Combining screens using the Tile Matrix feature (2 V MONITORS x 2 H MONITORS) using DisplayPort Daisy Chain cabling enables the display of real 8K video.

- **Stable and safe operation**
  - **Cooling fan**
    Depending on the conditions or location of use, a cooling fan works to ensure the liquid crystal display stays cool during prolonged use, reducing the burden on the display.
  - **Dual Daisy Chain Mode**
    Use of both HDMI and DisplayPort output at the same time ensures video continues to be shown even if one of the video signals is interrupted.
  - **Equipped with G-sensor**
    When installing the monitor vertically, viewers are given appropriate installation guidance.

- **Simple and convenient**
  - **Remote resource management/operation status management/control**
    Compatibility with NaViSet Administrator 2 enables network operation of multiple NEC monitors and projectors, as well as network-based asset management.
  - **Simple tile matrix feature**
    Video signals from HDMI and DisplayPort can easily be shown across multiple screens.
  - **Preset mode feature**
    Creating different visual and audio settings for various purposes ensures simple monitor operation.
  - **Audio/Video Mute**
    Audio and video can be muted individually.
  - **Still image feature**
    Freezes the video so that its still image shows on-screen.
  - **Multi-picture feature (PIP/PBP)**
    Supports multi-screen viewing using two or four screens.
  - **Quick input change**
    Enables seamless switching between two selected input sources.
  - **Joystick key**
    A joystick-like mechanism on the screen itself enables intuitive operation.
  - **Automatic time setting**
    The current time is taken from an NTP server for simple time setting and syncing.

- **Wide-ranging expandability**
  - **Intel® Smart Display Module (Intel® SDM) compatible option slot (Intel® SDM Small (Intel® SDM-S)/Intel® SDM Large (Intel® SDM-L))**
    Intel® SDM enables compatibility with the scaling and operating methods of various systems.

Chapter 1 Installation

This Chapter Includes:

- ⇨ “Setup Overview” on page 11
- ⇨ “Mounting (for Customer)” on page 14
- ⇨ “Mounting (for Trained Installers)” on page 15
- ⇨ “Attaching Mounting Accessories” on page 19

NOTE:

For box contents, please refer to the Setup Manual provided in the box.

Product warranty does not cover damage caused by improper installation. Failure to follow these recommendations could result in voiding the warranty.

Setup Overview

1. Determine the installation location

⚠ **WARNING:** Please refer to "WARNING 7", "WARNING 8" and "WARNING 9".

NOTE: To avoid scratching the LCD panel, always place a soft cloth, such as a blanket that is larger than the monitor's screen area, on the table before laying the monitor face down when installing the monitor stand or mounting accessories.

2. Install the remote control batteries

The remote control is powered by two 1.5 V AAA batteries.

To install or replace batteries:

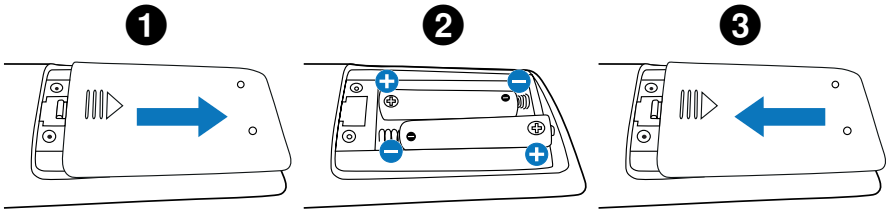

We recommend the following battery use:

⚠ **CAUTION:** Please refer to "CAUTION 8".

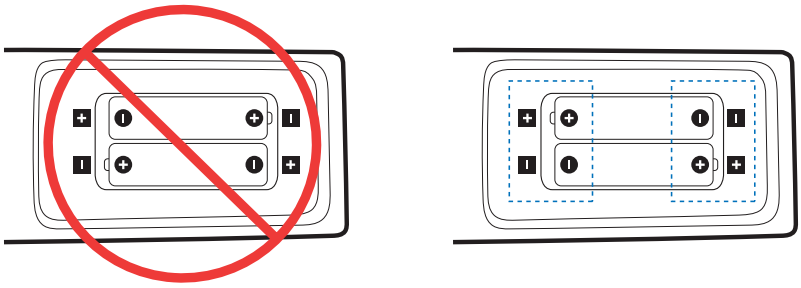

NOTE: If you do not intend to use the remote control for a long period of time, remove the batteries.

3. Connect external equipment (see page 27)

- To protect the external equipment, turn off the main power before making connections.
- Refer to the user's manual of your equipment for further information.

NOTE: Do not connect/disconnect cables when turning on the monitor or other external equipment as this may result in loss of image.

4. Connect the supplied power cord

⚠ **WARNING:** Please refer to the "Important Information" section of this user's manual for proper selection of an AC power cord.

⚠ **CAUTION:** Please refer to "CAUTION 1".

NOTE:
- The monitor should be installed close to an easily accessible power outlet.
- Please make sure that enough power is supplied to the monitor. Please refer to the "Power Supply" in the specification (See "M751" on page 81 and "M861" on page 82).

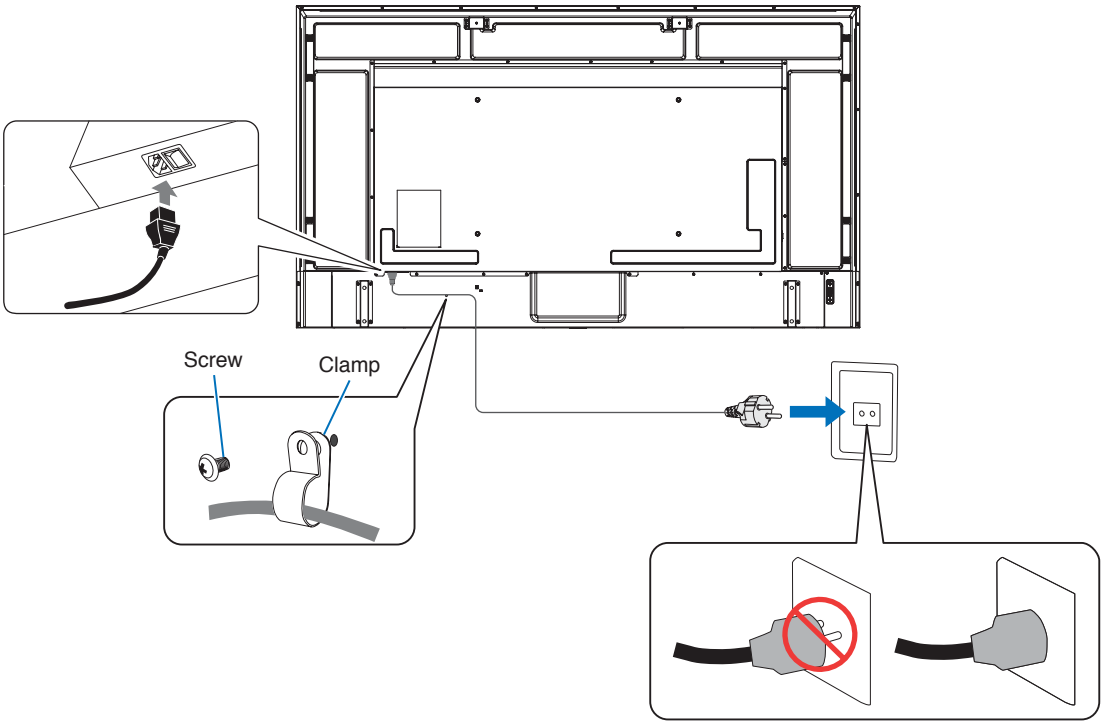

5. Cable information

CAUTION: Use the provided specified cables with this product so as not to interfere with radio and television reception.
For USB, please use a shielded signal cable with ferrite core.
For HDMI, RS-232C and DisplayPort, please use a shielded signal cable.
Use of other cables and adapters may cause interference with radio and television reception.

6. Turn on the power for the monitor and the external equipment

Switch on the monitor power first.

7. Operate the attached external equipment

Select the input source for the attached equipment to show the image signal on screen.

NOTE: If you have selected anything other than HDMI1 for the input, if the main power is turned off, DDC communication will not be available.

8. Adjust the sound

Make volume adjustments when required.

9. Adjust the picture settings (see page 90)

If necessary, make adjustments to the backlight, colors, contrast, and image position in the OSD PICTURE menu.

10. Recommended adjustments

The backlight used for this monitor has a limited life and its brightness decreases with the usage time.

Also, if the same still image is shown for a long time, “Image Persistence” may occur. “Image Persistence” is a phenomenon in which the image of an LCD remains visible after the device has turned off.

The “Image Persistence” is gradually eliminated by changing the screen, but if the same screen is shown for too long, the “Image Persistence” will not disappear.

To avoid shortening this monitor’s lifetime, please note the following:

- Turn off the monitor’s main power switch when not in use.
- Use the ⏻ button on the main unit or the STANDBY button on the remote control to put the unit in standby mode.
- Use [POWER SAVE SETTINGS] in the [PROTECT] OSD menu. When there is no input signal the monitor will automatically switch to power save mode.
- If using a cover made of glass or acrylic to protect the panel surface of the main unit, the panel is sealed and the internal temperature rises.
  Reduce the monitor’s brightness to prevent the internal temperature from rising. If the monitor is connected to a computer, use the computer’s power management function to control the monitor’s automatic power off.
- To reduce the load on the LCD panel, use [SCREEN SAVER] in the [PROTECT] OSD menu.
- Use [SCHEDULE] in the OSD menu to automatically control the monitor’s on and standby power states as required.

NOTE: When using the schedule function, set [DATE & TIME] in the [SYSTEM] OSD menu.

Mounting (for Customer)

⚠ **WARNING:** Please refer to "WARNING 7".

Please contact your supplier as they may be able to provide a list of qualified installation professionals. Mounting on a wall or ceiling and hiring a technician is the customer's responsibility.

Maintenance

- Periodically check for loose screws, gaps, distortions, or other problems that may occur with the mounting equipment. If a problem is detected, please refer to qualified personnel for service.
- Regularly check the mounting location for signs of damage or weakness that may occur over time.

⚠ **WARNING:** Please refer to "WARNING 8".

Prevent Tipping

⚠ **WARNING:** Please refer to "WARNING 8" and "WARNING 9".

Before attaching the monitor to the wall, make sure that the wall can support the weight of the monitor.

Changing the Logo Ornament Position

When using the monitor in the portrait position, the logo ornament position can be changed.

Removing the logo ornament: Unscrew the installed screw then take off the logo ornament.

Attaching the logo ornament: Make sure the holes for the screws on the logo ornament and the holes for the screws on the bezel are aligned. Install the logo ornament with the screws, which are used for installing the logo ornament. (Recommended Fasten Force: 30-40 N•cm).

NOTE: Do not use any other screw to install the logo ornament.

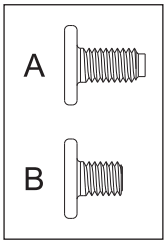

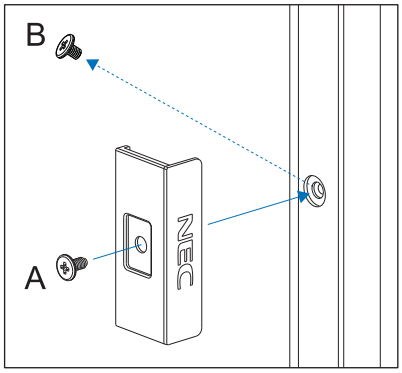

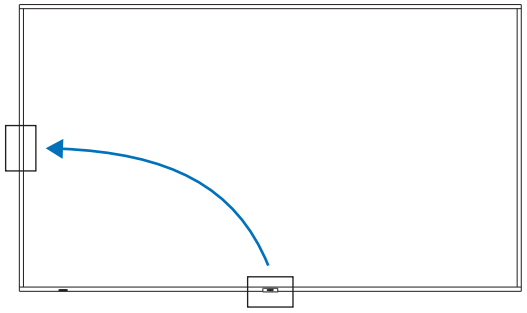

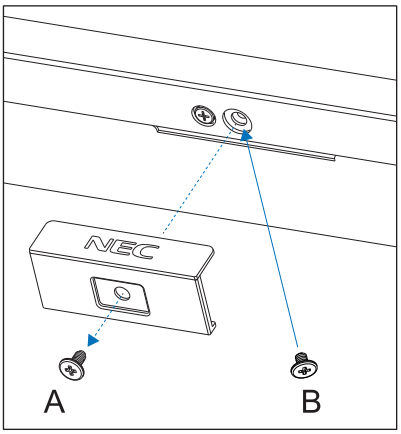

Mounting (for Trained Installers)

⚠ **WARNING:** Please refer to "WARNING 9".

Carefully inspect the location where the unit is to be mounted. Not all walls or ceilings are capable of supporting the weight of the unit. The weight of this monitor is provided in the specifications (see "M751" on page 81 and "M861" on page 82). Product warranty does not cover damage caused by improper installation, re-modeling, or natural disasters. Failure to comply with these recommendations could result in voiding the warranty.

To ensure safe installation, use two or more brackets to mount the unit. Mount the unit to at least two points on the installation location.

⚠ **WARNING:** Please refer to the "Important Information" section.

Please note the following when mounting on a wall or ceiling:

- We recommend mounting interfaces that comply with UL1678 standard in North America.
- Prior to mounting, inspect the installation location to ensure that it is strong enough to support the weight of the unit so that the unit will be safe from harm.
- For detailed information, refer to the instructions included with the mounting equipment.

We strongly recommend using the screws as shown below.
If using screws longer than below mentioned, check the depth of the hole.

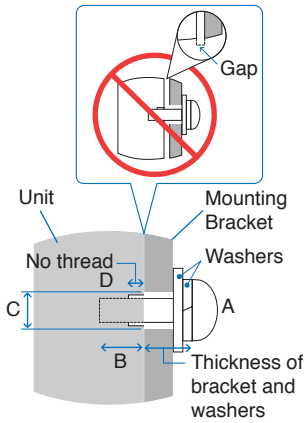

Screw Size		Bracket Hole	No Thread	Recommended Fasten Force
(A)	(B)	(C)	(D)	
M8 (4 pcs)	16~18 mm	≤ Ø 12 mm	6 mm	950-1600 N•cm

NOTE: When used in a video wall configuration for a long time, slight expansion of the monitors may happen due to temperature changes. It is recommended that a gap of over one millimeter is kept between adjacent monitor edges.

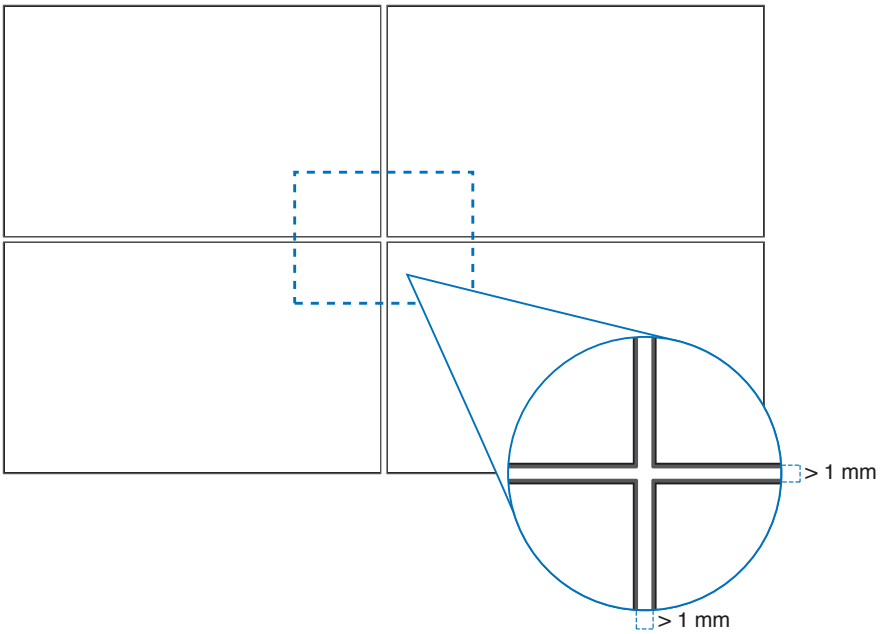

Installing a safety wire

⚠ **WARNING:** Please refer to "WARNING 9".

⚠ **CAUTION:** Please refer to "CAUTION 7".

NOTE: When installing, do not apply pressure to the LCD panel or excessive force to any part of the monitor by pushing or leaning on it. This may cause the monitor to become distorted or damaged.

Handles for safety wire

Attach the safety wire to the handles shown in the figure below.

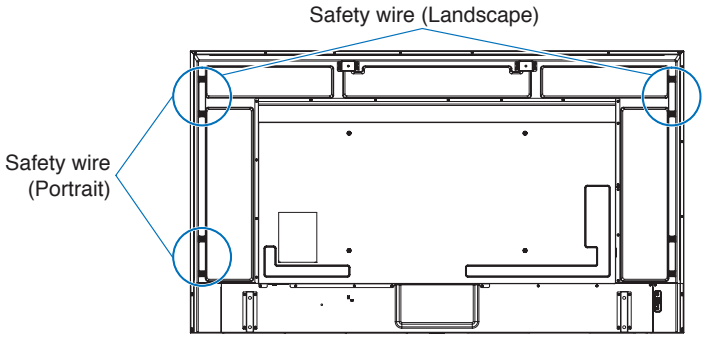

Mounting Location

⚠ **WARNING:** Please refer to "WARNING 8".

NOTE: Allow for adequate ventilation or provide air conditioning around the monitor, so that heat can properly dissipate away from the monitor and from the mounting equipment.

Orientation

- When using this monitor in a portrait position (viewing from the front), ensure to rotate it counterclockwise so that the right side is moved to the top and the left side is moved to the bottom.
- If installed in the wrong orientation, heat may be trapped inside the main unit and the lifetime of the monitor may be shortened.
- It cannot be installed upside down.

NOTE: When you rotate the monitor in the wrong direction, a warning message is shown on the screen.

⚠ **WARNING:** Please refer to "WARNING 8".

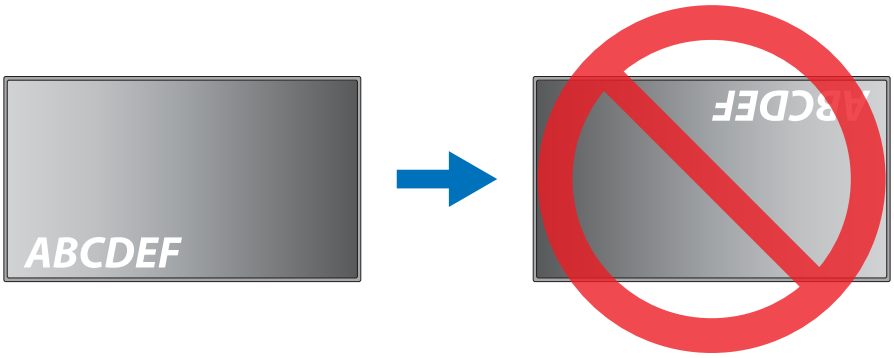

The monitor cannot tilt 16° or more.

⚠ **WARNING:** Installing the monitor at an angle of 16° or more may cause a malfunction.

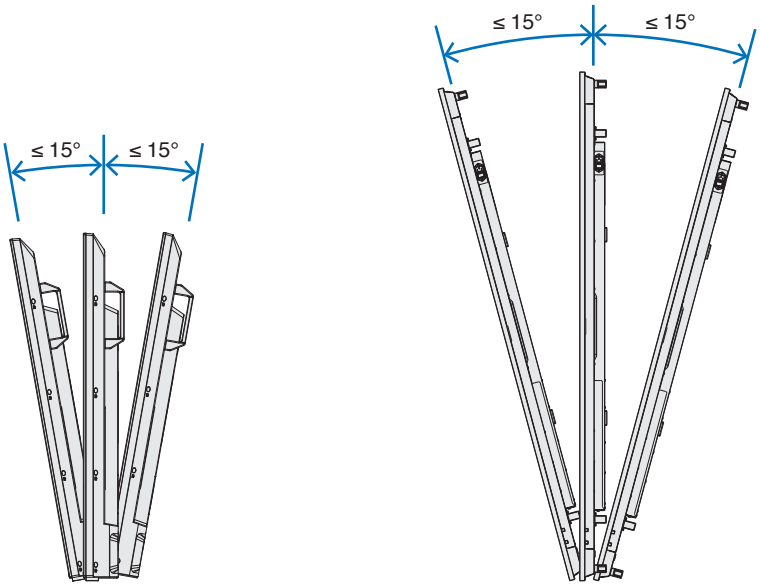

Landscape

Portrait

Ventilation Requirements

When mounting in an enclosed space or recessed area, leave adequate room between the monitor and the enclosure to allow heat to disperse, as shown below.

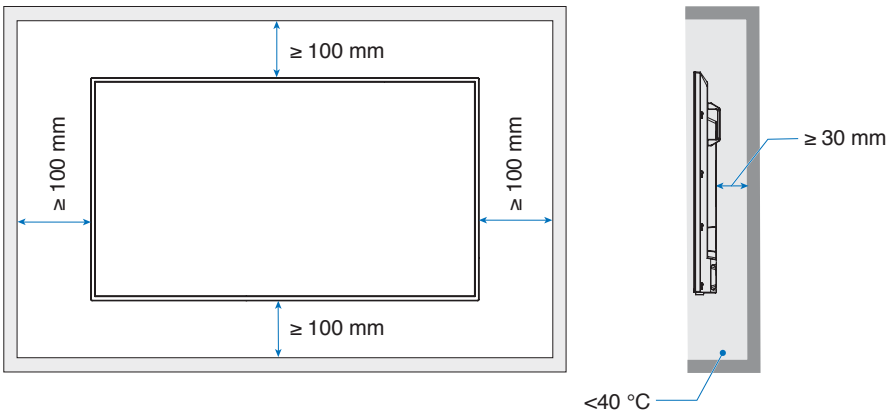

NOTE:
- Allow adequate ventilation or provide air conditioning around the monitor, so that heat can properly dissipate away from the unit and the mounting equipment; especially when you use monitors in a multiple screen configuration.
- This monitor has internal temperature sensors.

  If the monitor overheats, a “Caution” warning appears. If the “Caution” warning appears, stop using the unit, turn off the power and allow it to cool.

  If the monitor is used in an enclosed area or if the LCD panel is covered with a protective screen, and the temperature is higher than the normal operating temperature, please turn the cooling fan to [ON] within the [FAN CONTROL] menu within the OSD menu (see page 102).

Mounting on Ceilings

⚠ **WARNING:** Please refer to “WARNING 8” and “WARNING 9”.

Attaching Mounting Accessories

Be careful to avoid tipping the monitor when attaching accessories.

1. Attach eyebolts for mounting

This model is equipped with pre-installed eyebolt brackets for attaching eyebolts (not included) to aid in mounting.

- Screw the eyebolts into eyebolt holes in eyebolt brackets as shown in the picture.
- Be sure the eyebolts are secure.
- In order to move the monitor into position, use a lifting device attached to the eyebolts.

⚠ **CAUTION:** **DO NOT** mount the monitor using only the eyebolts. Eyebolts are for temporary use only.

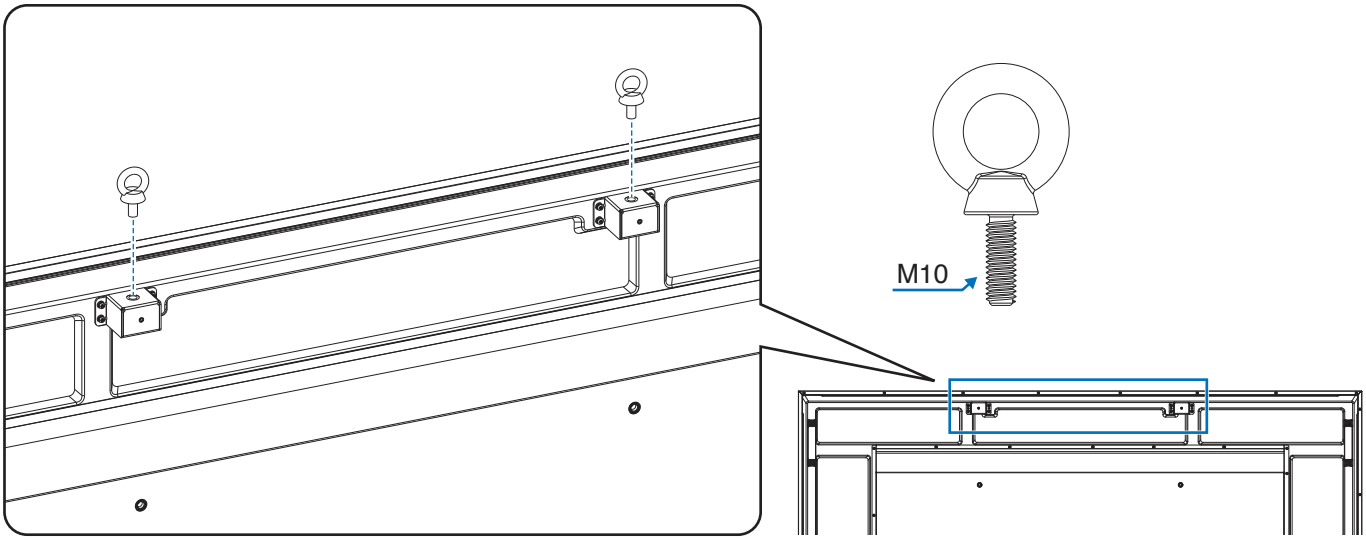

2. Attach Mounting Accessories

Be careful to avoid tipping the monitor when attaching accessories.

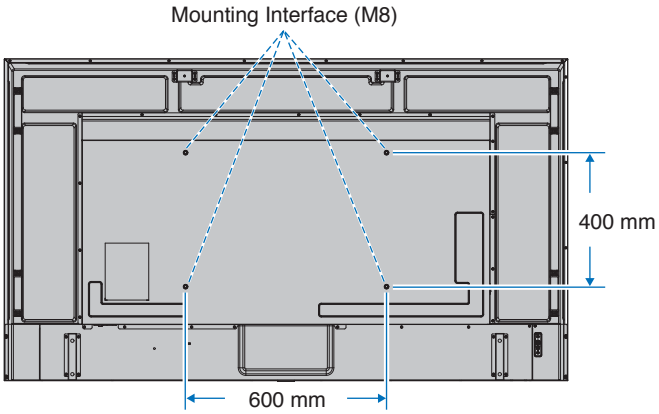

Mounting accessories can be attached with the monitor in the face down position. To avoid scratching the LCD panel, always place a soft cloth, such as a blanket that is larger than the monitor's screen area, on the table before laying the monitor face down. Make sure there is nothing on the table that can damage the monitor.

NOTE: Prior to installation, place the monitor face down on a flat even surface that is larger than the monitor screen. Use a sturdy table that can easily support the weight of the monitor.

Installing and Removing the Optional Table Top Stand

⚠ **WARNING:** Please refer to "WARNING 8".

⚠ **CAUTION:** Please refer to "CAUTION 5".

For installation, follow the instructions included with the stand or mounting equipment. Use only those devices recommended by the manufacturer.

NOTE:
- Use the ST-801.
- ONLY use screws which are included with the optional table top stand.
  Install the stand so the long end of the feet face forward.
- The monitor can only be used in the landscape orientation with the tabletop stand.

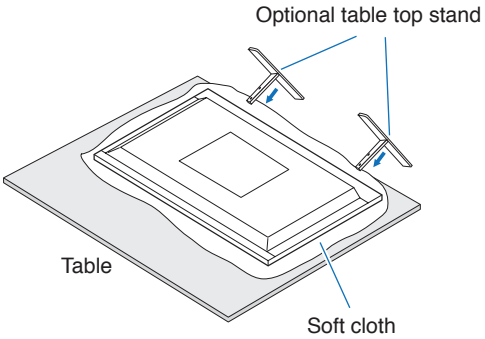

Chapter 2 Parts Names and Functions

This Chapter Includes:

- ⇨ “Control Panel” on page 22
- ⇨ “Terminal Panel” on page 23
- ⇨ “Wireless Remote Control” on page 25

Control Panel

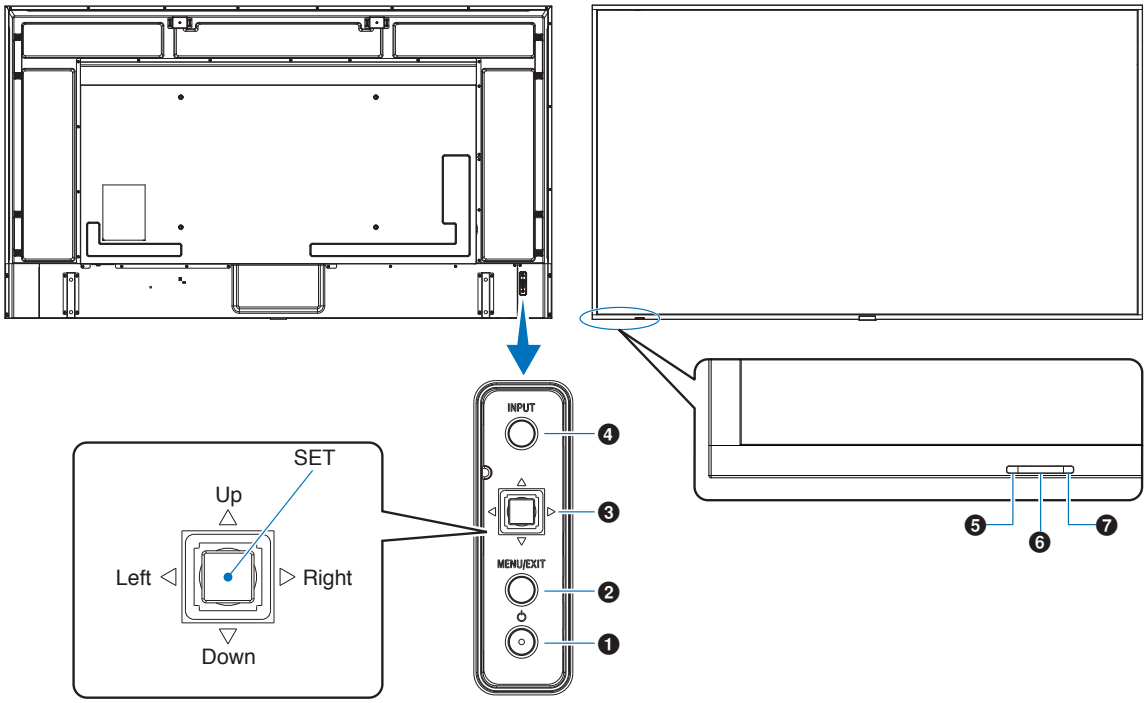

❶ ⏻ Button (power button)

Switches between power on and standby. See page 36.

❷ MENU/EXIT Button

Opens the OSD menu when the OSD menu is closed.

Acts as a back button within the OSD menu to move to the previous OSD menu.

Acts as an exit button to close the OSD menu when on the main menu.

❸ Joystick Key/SET Button*1

◁/▷: Left/Right control.

- Navigates to the left or right through the OSD Control menus.
- Increases or decreases adjustments for individual OSD settings.
- Directly adjusts the VOLUME when the OSD menu is closed.

▽/△: Up/Down control.

- Navigates up or down through the OSD Control menus.

SET: (button press)

- Selects, or sets the setting for, the highlighted function in the OSD menu.

*1: The ◁, ▷, △ and ▽ functions change according to the monitor orientation (landscape/portrait).

❹ INPUT Button

INPUT: Cycles through the available inputs when the OSD menu is closed.

[DisplayPort1], [DisplayPort2], [HDMI1], [HDMI2], [OPTION]*1, [COMPUTE MODULE]*2. Input names are shown as their factory preset name.

*1: This function depends on which Option Board is installed in the monitor.

*2: This input is available when the optional Raspberry Pi Compute Module Interface Board and Raspberry Pi Compute Module are installed. See page 84.

❺ Power Indicator

- Glows blue when the monitor is in active mode*1.
- Green and Amber blink alternately when the [SCHEDULE INFORMATION] function is enabled.
- When a component failure is detected within the monitor, the indicator will blink red or blink a combination of red and blue.
- Please refer to the Power ON and OFF Modes table on page 36.

*1: If [OFF] is selected in the [POWER INDICATOR] the LED will not glow when the monitor is in active mode. See page 107.

❻ Remote Control Sensor

Receives the signal from the remote control (when using the wireless remote control). See page 37.

❼ Ambient light sensor

Detects the level of ambient light, allowing the monitor to make automatic adjustments to the backlight setting, resulting in a more comfortable viewing experience. Do not cover this sensor. See page 49.

Terminal Panel

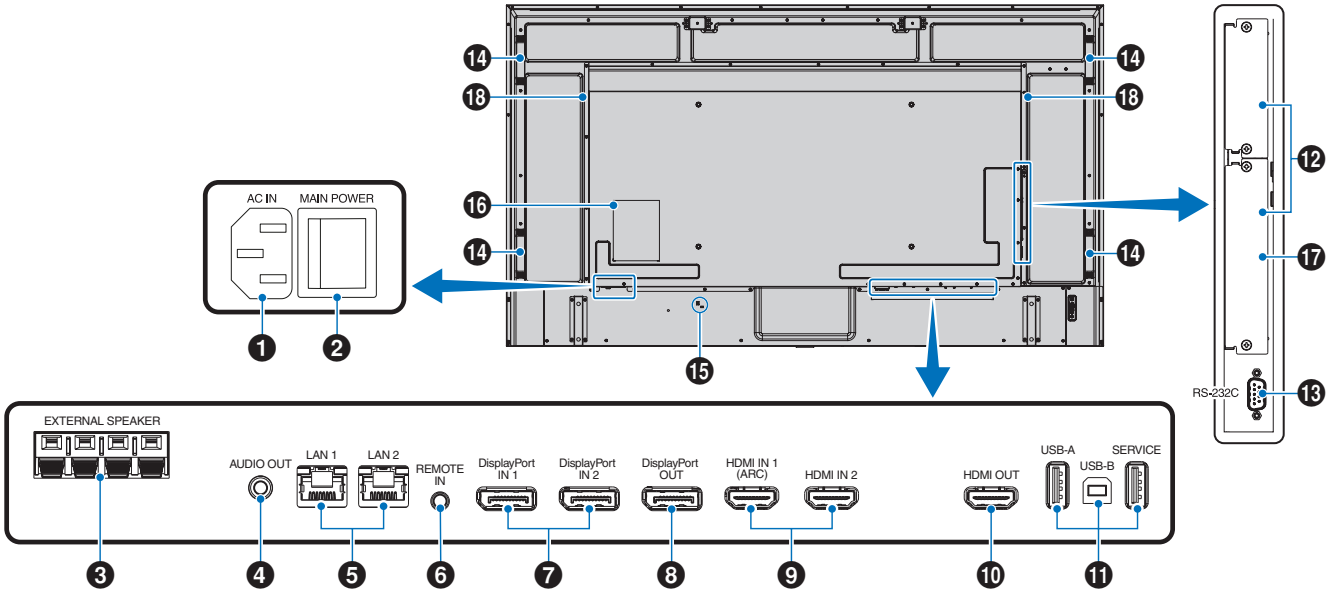

❶ AC IN Connector

Connects with the supplied power cord.

❷ Main Power Switch

On/Off switch to turn main power ON/OFF.

❸ EXTERNAL SPEAKER TERMINAL

Outputs the audio signal.
Red terminal is plus (+).
Black terminal is minus (–).

NOTE: Please contact your supplier for a list of compatible Option Speakers.

❹ AUDIO OUT

Audio signal output from DisplayPort and HDMI to an external device (stereo receiver, amplifier, etc.).

NOTE: This connector is not a headphone terminal.

❺ LAN Port 1/2 (RJ-45)

Connect to LAN in order to manage and control the monitor over the network.

Control multiple monitors when using a LAN daisy-chain connection.

NOTE:
- Please connect the LAN cable to the LAN1 port for LAN network communications.
- Please refer to Multiple Monitors Connection (see page 65).

❻ REMOTE

Use an optional sensor unit by connecting it to your monitor.

NOTE:
- Do not use this connector unless specified.
- When the optional sensor unit is connected, the monitor's remote control sensor is disabled.

❼ DisplayPort IN 1/2

DisplayPort signals input.

❽ DisplayPort OUT

DisplayPort signals output.

❾ HDMI IN 1/2 (HDMI1 (ARC)/HDMI2)

HDMI signals input.

NOTE:
- HDMI1 terminal also supports ARC (Audio Return Channel) for audio output.
- ARC sends the monitor's sound to audio equipment with an HDMI1 ARC connector.
- Use the included ARC-supported HDMI cable. The audio equipment will output the monitor's audio.
- The audio equipment can be controlled with the included remote control.

❿ HDMI OUT

HDMI signals output.

⓫ USB ports

For the USB port information, please see "Connecting a USB Device" on page 34.

USB-A (Hub/0.5 A): Downstream port (USB Type-A).
USB-B (Ctrl): Upstream port (USB Type-B).
Service (2A): Service port. Power supply for USB devices. Connect a color sensor MDSVSENSOR 3.

⓬ Option Board Slot

Slot for installation of an Intel® SDM.

NOTE: Please contact your supplier for a list of compatible Option Boards.

⓭ RS-232C IN (D-Sub 9-pin)

Connect RS-232C input from external equipment, such as a computer, in order to control RS-232C functions. See page 63.

⓮ Handle

⓯ Security Slot

Security and theft protection lock slot compatible with Kensington security cables/equipment.

NOTE: For products, visit Kensington's website.

⓰ Label

⓱ Raspberry Pi Compute Module Slot

Slot for installing a Raspberry Pi Compute Module Interface Board and Raspberry Pi Compute Module. See page 84.

⚠ **CAUTION:** Installation must be performed by a qualified technician. Do not attempt to install a Compute Module Interface Board and Raspberry Pi Compute Module by yourself.

⓲ Internal Speaker

Wireless Remote Control

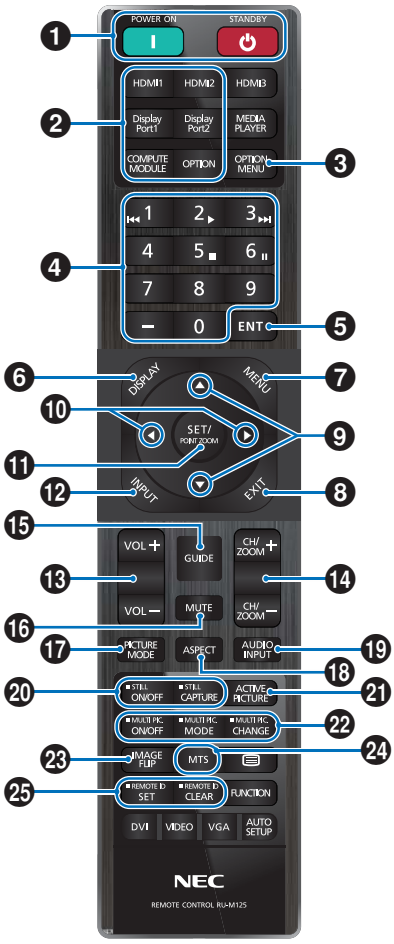

NOTE:
- The buttons with no explanation are not used with your monitor model.
- Some Remote Control buttons are used for CEC (Consumer Electronics Control). The CEC buttons are different based on whether the current CEC setting is [MODE1] or [MODE2]. Please see page 32.

❶ POWER ON and STANDBY Buttons

POWER ON resumes full power from low power mode.

STANDBY puts the monitor in low power mode.
See page 36.

❷ DIRECT INPUT Button

Immediately changes the input to the one on the button names.

The button names reflect the factory preset name for the input.

❸ OPTION MENU Button

For use when an Option Board is installed. See page 23.

The function depends on which Option Board is installed in the monitor.

❹ KEYPAD

Press the buttons to set and change passwords, change the channel and set the REMOTE ID. See page 61.

❺ ENT Button

Makes selections.

For use with an Option Board. The function depends on which Option Board is installed in the monitor.

❻ DISPLAY Button

Shows/Hides the information OSD. See page 41.

Unlocks the remote control's buttons if they have been locked in the [LOCK SETTINGS] in the [PROTECT] menu. Press and hold the DISPLAY button for more than five seconds to unlock the remote. See page 54.

❼ MENU Button

Opens and closes the OSD menu. See page 41.

❽ EXIT Button

Acts as a back button within the OSD to move to the previous OSD menu.

Acts as an EXIT button to close the OSD menu when on the main menu.

❾ ▲/▼ Button (up/down button)

Act as navigation buttons, within the OSD menu to move the highlighted area up or down.

❿ ◀/▶ Button (left/right button)

Act as navigation buttons, within the OSD menu to move the highlighted area left or right.

Increases or decreases the adjustment level within the selected OSD menu setting.

⓫ SET/POINT ZOOM Button

SET: When the OSD menu is open, this button acts as a set button when you make a selection.

POINT ZOOM: When the OSD menu is closed, this button acts as a point zoom button. See page 40.

⓬ INPUT Button

Cycles through the inputs.

The input names reflect the factory preset name for the input unless they are manually renamed in the OSD menu.

⓭ VOLUME +/– Button

Increases or decreases the audio output level.

⓮ CH/ZOOM +/– Button*

Increases or decreases the point zoom level. Please refer to the Point Zoom instructions. See page 40.

*: When using with an Option Board, the function depends on which Option Board is installed in the monitor.

⓯ GUIDE Button

For use with an Option Board. The function depends on which Option Board is installed in the monitor.

⓰ MUTE Button

Mutes the monitor's audio and video output.
Press it again to unmute the monitor's audio and video output. See "MUTE SETTING" on page 107 for details.

⓱ PICTURE MODE Button

Cycles through the picture modes [NATIVE], [RETAIL], [CONFERENCING], [HIGHBRIGHT], [TRANSPORTATION] and [CUSTOM]. See page 38.

⓲ ASPECT Button

Cycles through the picture aspect ratios [FULL], [WIDE]*, [1:1], [ZOOM] and [NORMAL]. See page 39.

*: HDMI1, HDMI2, OPTION (TMDS)*2, COMPUTE MODULE*1 inputs only.

*1: This input is available when the optional Raspberry Pi Compute Module Interface Board and Raspberry Pi Compute Module are installed.

*2: This function depends on which Option Board is installed in the monitor.

⓳ AUDIO INPUT Button

Selects the audio input source [IN1], [IN2], [HDMI1], [HDMI2], [DisplayPort1], [DisplayPort2], [OPTION]*1 and [COMPUTE MODULE]*2.

*1: This function depends on which Option Board is installed in the monitor.

*2: This input is available when the optional Raspberry Pi Compute Module Interface Board and Raspberry Pi Compute Module are installed. See page 84.

⓴ STILL Button

ON/OFF button: Activates/deactivates still picture mode.

CAPTURE button: Captures a still picture.

NOTE:
- This function is released if any following functions is changed: [ASPECT], [MULTI PICTURE], [TILE MATRIX], [MOTION] in [SCREEN SAVER], POINT ZOOM, [IMAGE FLIP], [QUICK INPUT CHANGE], [OVERSCAN], [DUAL DAISY CHAIN MODE], if you change the [AUDIO INPUT] setting, or set [DisplayPort VERSION] of [DisplayPort1] to [1.4] while STILL is active.
- This function is disabled when one of the following functions is active: [MULTI PICTURE], [MOTION] in [SCREEN SAVER], POINT ZOOM, [TILE MATRIX], [IMAGE FLIP], [QUICK INPUT CHANGE], [DUAL DAISY CHAIN MODE], [ROTATE] or if input is set to [DisplayPort1] and the [DisplayPort VERSION] is set to [1.4].
- If the input signal is [OPTION], this button's action depends on which Option Board is installed in the monitor.

㉑ ACTIVE PICTURE Button

Selects the active picture when Multi Picture Mode is enabled. See page 96.

㉒ MULTI PICTURE Buttons

ON/OFF button: Turns Multi Picture Mode on and off.

MODE button: Switches between the available Picture-In-Picture (2PIP) and Picture-By-Picture (2PBP or 4PBP) modes.

CHANGE button: Swaps the selected inputs between Picture 1 and Picture 2 when 2PIP is set.

For more information see page 96.

NOTE: If you press SET/POINT ZOOM button while Multi Picture is ON, you can change the active picture's picture size.

㉓ IMAGE FLIP Button

Toggle switches between [H FLIP], [V FLIP], [180° ROTATE] and [NONE]. See page 95.

㉔ MTS Button

For use with an Option Board. The function depends on which Option Board is installed in the monitor.

㉕ REMOTE ID Button

Activates the REMOTE ID function. See page 61.

Chapter 3 Connections

This Chapter Includes:

⇨ “Wiring Diagram” on page 28

⇨ “Connecting to a Personal Computer” on page 29

⇨ “Connecting to a Media Device with HDMI” on page 29

⇨ “HDMI-CEC Command” on page 31

⇨ “Internal Video Sources” on page 33

⇨ “Connecting a USB Device” on page 34

Connecting External Equipment

NOTE:
- Do not connect or disconnect cables when turning on the monitor’s main power or other external equipment’s power as this may result in loss of image.
- Do not use an attenuating (built-in resistor) audio cable. Using an audio cable with a built-in resistor will lower the sound level.

Before making connections:

- Turn off the device’s power before connecting it to the monitor.
- Refer to the device’s user manual for available connection types and instructions for the device.
- We recommend turning off the monitor’s main power before connecting or disconnecting a USB storage device to avoid data corruption.

Wiring Diagram

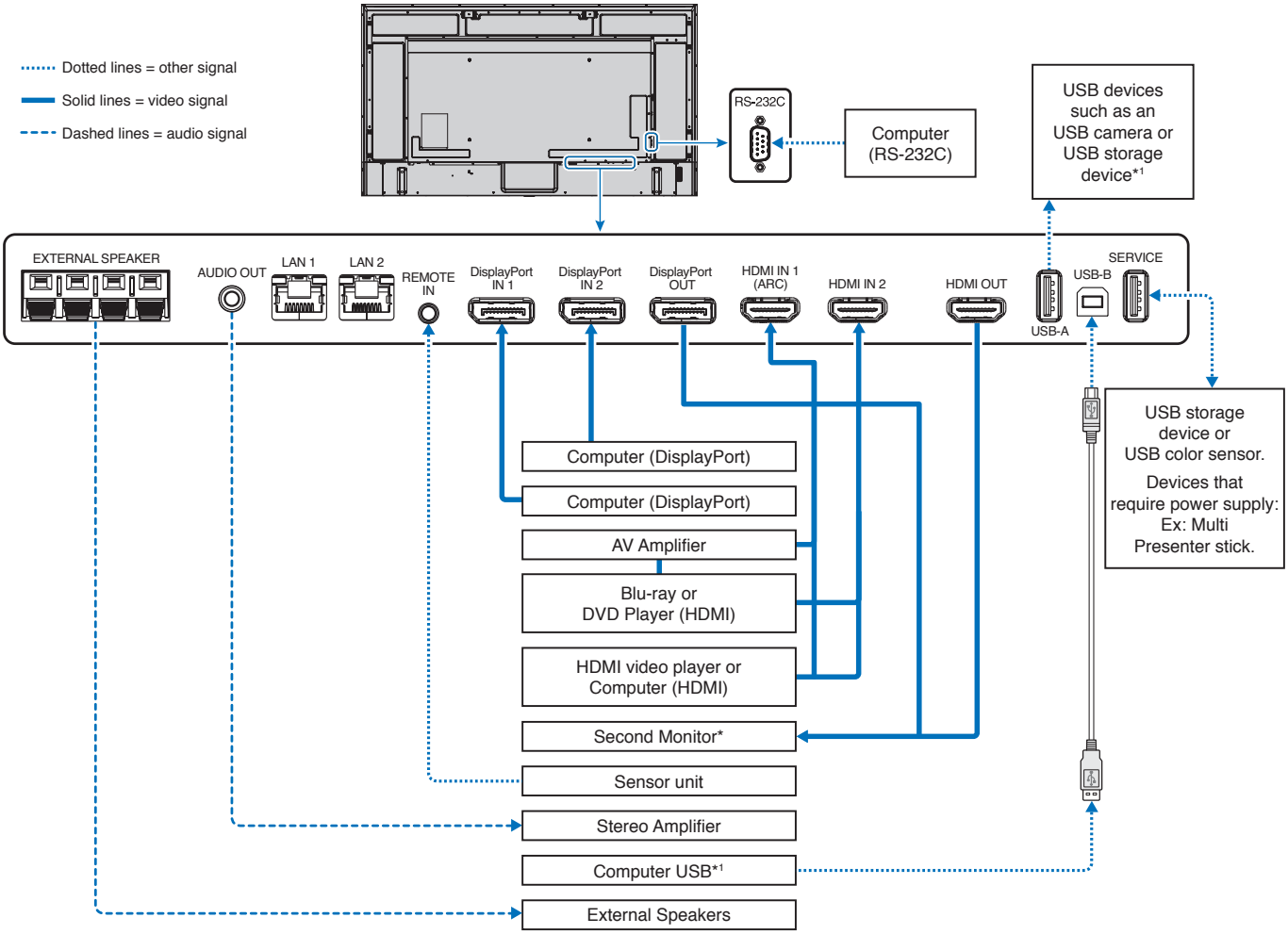

*: Multiple monitors that are daisy-chained have a limit to the number of connectible monitors.

*1: The device connected to USB-B can use the device connected to USB-A. See the "Connecting a USB Device" on page 34.

Connecting to a Personal Computer

Connecting to a Computer with HDMI

- Please use an HDMI cable with the HDMI logo.
- It may take a moment for the signal to appear after turning on the computer.
- Some display cards or drivers may not show an image correctly.
- When you use a computer with HDMI, please set [OVERSCAN] to [AUTO] or [OFF] as display drivers may not be fully compatible and may not show an image correctly. See page 89.
- If the source signal is 4K (50 Hz/60 Hz) or HDCP 2.2 or HDR, please set [MODE2] at [HDMI] in [ADVANCED]. See page 89.
- If the monitor's main power is turned on after a connected computer is turned on, sometimes an image is not shown. In this case, please turn off the computer then turn it on again.
- When input signal is 4K, please use high-speed HDMI cable.

Connecting a Computer with DisplayPort

- Please use a DisplayPort cable with the DisplayPort compliance logo.
- To use the DisplayPort out connector, please refer to Video out. See page 60.
- It may take a moment for the signal to appear after turning on the computer.
- When connecting a DisplayPort cable to a component with a signal conversion adapter, an image may not appear.
- Some DisplayPort cables feature a locking function. When removing this cable, hold down the top button to release the lock.
- To output DisplayPort audio, set [DisplayPort1] or [DisplayPort2] at [AUDIO INPUT] in the OSD or choose [DisplayPort1] or [DisplayPort2] using the remote control AUDIO INPUT button.
- If the monitor's main power is turned on after a connected computer is turned on, sometimes an image is not shown. In this case, please turn off the computer then turn it on again.
- If input signal is 8K, please use a DisplayPort cable with the 8K logo.

Connecting to a Media Device with HDMI

Connect using a single HDMI cable for the highest picture and audio quality from Blu-ray players, streaming media players, or game consoles. 4K UHD content is shown when the connected media player also supports 4K content.

Supports HDCP (High-bandwidth Digital Contents Protection) coding, a type of digital rights management that prevents high-definition content, in Blu-ray discs, DVDs and streaming media, from being copied or broadcast illegally.

NOTE:
- Compatible signal list is on the page 80.
- Connect the HDMI cable when both the media player and the monitor are powered off.
- Use an HDMI cable with the HDMI logo.
- Some HDMI cables and devices may not show an image correctly due to different HDMI specifications.
- HDCP is a system for preventing illegal copying of video data sent over a digital signal. If you are unable to view material via the digital inputs, this does not necessarily mean that the monitor is not functioning properly.
- When input signal is 4K, please use high-speed HDMI cable.

Connecting to audio equipment with ARC function

If connecting audio equipment with ARC function to HDMI1 (ARC) using the included ARC-supported HDMI cable, the audio equipment outputs the monitor's sound.

- The sound via HDMI1 (ARC) is not adjustable by the OSD menu.
- When the ARC function is activated, the monitor's internal speaker or the external speakers connected to the monitor are muted.

HDMI-CEC (Consumer Electronics Control)

HDMI-CEC provides compatible media players, connected via HDMI, the ability to communicate and allow limited control between the device and the monitor. For example, turning on a Blu-ray player can immediately switch input to the Blu-ray player without using the remote control. Not all devices are fully compatible, and, in some cases, the media device manufacturer may only provide compatibility with its own monitors or TVs. See "HDMI-CEC Command" on page 31.

When supported, the monitor's remote control can be used to control the HDMI media device.

NOTE: The instructions in this section guide you through configuring [CEC] in the monitor's OSD menu. These settings can also be configured using the monitor's web controls.

Enabling CEC

1. Connect a CEC device to the HDMI port.

   Press the HDMI button on the remote control.
2. Press the MENU button to open the OSD menu.
3. Navigate to [INPUT-ADVANCED] then to [CEC].
4. Select [MODE1] or [MODE2] for [CEC].
5. Select SET under [SEARCH DEVICE].

   When the search is complete, the HDMI port with a CEC connected device is shown with its name. See page 90.

   If no CEC device is found, make sure the device is plugged in, turned on, it supports CEC and CEC is enabled. Depending on the manufacturer, the CEC feature may have a different name. Refer to the device's product manual.
6. Press the EXIT button on the remote control.

HDMI-CEC Command

Please connect an HDMI-CEC compatible device to HDMI port.

OSD menu	HDMI-CEC command name	Explanation	Setting
CEC (Consumer Electronics Control)	One Touch Play	When an HDMI-CEC compatible device is turned on, the monitor connected to the device by an HDMI cable also automatically turns on. After the monitor powers on, the input terminal switches automatically to the target HDMI. If the monitor is turned on when HDMI-CEC compatible devices are turned on, it changes the [INPUT] from the current one to [HDMI2].	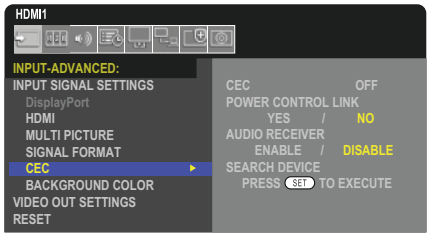 To set the CEC options, please follow the steps below. Press the Menu button to open the OSD. Using the ▲▼ ◀ ▶ buttons, navigate to [INPUT], to [ADVANCED], to [CEC], then press SET/POINT ZOOM button to enter the CEC options. Use the ◀ ▶ buttons to highlight [MODE1] or [MODE2], then press SET/POINT ZOOM button to enable CEC.
	Remote Control Pass Through	The monitor's wireless remote control button operation can function with HDMI-CEC compatible devices. For example, if turning on the monitor by wireless remote control and pressing the play button, an HDMI-CEC compatible device can also be turned on and play.	
	Power Status	Connected HDMI-CEC compatible devices obtain the monitor's power status, such as if the monitor is in standby mode or on.	
	System Information	This function obtains the information for a connected HDMI-CEC compatible device (CEC version, Physical Address). In addition, this function copes with the "Change Language function". If the language for the monitor is changed, the language for a connected HDMI-CEC compatible device is changed to the same language, which is selected for the monitor. For the "Change Language function", it is necessary that the connected HDMI-CEC compatible device be able to cope with multi-language.	
POWER CONTROL LINK	System Standby	If the monitor is set to standby using the wireless remote control, HDMI-CEC compatible devices also go into standby at the same time. If the monitor goes into standby while an HDMI-CEC compatible device is recording, the device remains on. Please refer to the user's manual supplied with the HDMI-CEC compatible device for further information.	Use the ▲▼ buttons to select [POWER CONTROL LINK]. Use the ◀ ▶ buttons to highlight [YES], then press the SET/POINT ZOOM button to select [YES].
AUDIO RECEIVER	System Audio Control	Please connect an audio equipment with ARC function to HDMI1 (ARC) by the included ARC supported HDMI cable. The Volume button on the wireless remote control can control the volume of the connected HDMI ARC audio equipment. While this function is active, the monitor's internal speaker or the external speaker connected to the monitor is automatically set to MUTE.	Use the ▲▼ buttons to select [AUDIO RECEIVER] then press SET/POINT ZOOM. Use the ◀ ▶ buttons to highlight [ENABLE], then press the SET/POINT ZOOM button to select [ENABLE].
SEARCH DEVICE	Device OSD Name Transfer	Use the ◀ ▶ buttons to highlight YES, then press the SET/POINT ZOOM button to start the search.	Use the ▲▼ buttons to select [SEARCH DEVICE].
	Routing Control	By selecting a device name, the HDMI-CEC compatible device input switches to the input you selected. After selecting the device, wireless remote control operation functions for the selected device.	This function searches for CEC compatible devices on the monitor's HDMI connections. If a HDMI-CEC compatible device is successfully detected, this function obtains the device's name. The device's name and the HDMI connection it is found on are displayed.
This CEC function supports Feature Abort. Please refer to Connections (see page 27) for HDMI-CEC compatible device connection.			

HDMI-CEC Remote Control button functions

HDMI-CEC [MODE1]

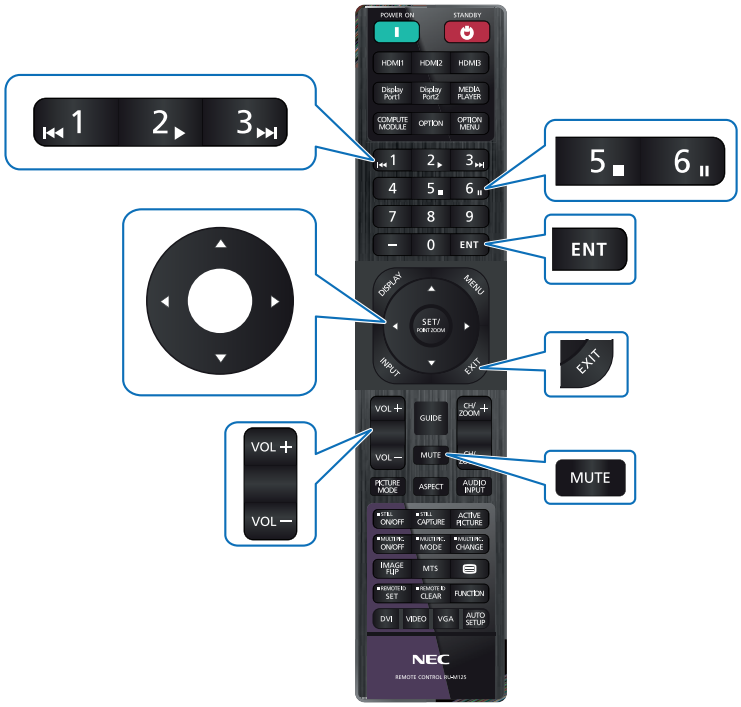

HDMI-CEC [MODE2]

Internal Video Sources

Option Boards for the Monitor

When an Option Board or a Raspberry Pi Compute Module Interface Board and Raspberry Pi Compute Module are installed in the monitor, it will show as available in the list in the [INPUT] of the OSD menu. Option Boards, the Raspberry Pi Compute Module Interface Board and Raspberry Pi Compute Module are available separately and must be physically installed in the monitor. This document contains instructions for how to use the monitor without any additional options. The locations where an Option Board and the Raspberry Pi Compute Module Interface Board are installed is indicated on the Terminal Panel diagram (see page 23). Full installation and usage instructions are provided with the individual device or available online.

NOTE:
- The optional DS1-IF20CE Compute Module Interface Board and Raspberry Pi Compute Module are available separately. Please contact an authorized dealer for more information. Installation must be performed by a qualified technician. Do not attempt to install a Compute Module Interface Board and Raspberry Pi Compute Module by yourself. See page 84.
- Please contact your supplier for available Option Boards.

Connect compatible USB storage device

Format a USB storage device in the FAT32 format. Refer to the computer's instruction user's manual or Help file on how to format a USB storage device.

Please use a USB storage device with this monitor in accordance with the drawing below.

If the physical size of the USB storage device is larger than the supported size listed below, please use a USB extension cable.

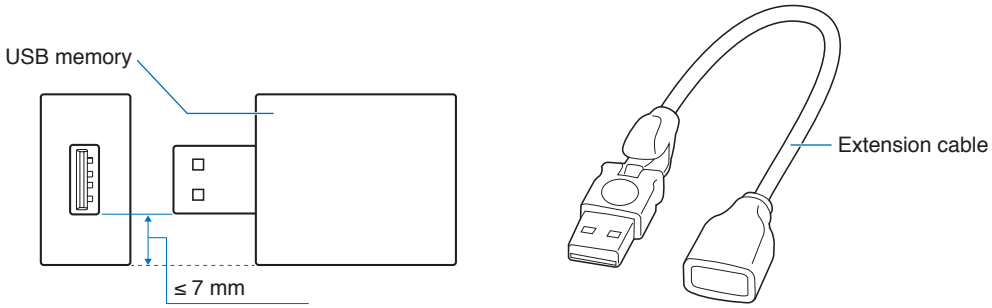

NOTE:
- If the monitor does not recognize a connected USB storage device, make sure the file structure is FAT32.
- The monitor is not guaranteed to work with all USB storage devices sold commercially.

Connecting a USB Device

Some of the USB ports on the monitor's terminal panel have different uses depending on the type of connected USB device. Please follow these guidelines when using these ports with supported devices.

USB-A (Hub/0.5A): USB downstream port (Type-A).

Connection used by external USB devices (such as cameras, flash memory, keyboards, etc.)

USB-B (Ctrl): USB upstream port (Type-B).

Connection to a computer with a USB cable. A USB compatible computer connected to USB-B (Ctrl) can control the devices connected to USB-A (Hub/0.5A) port.

Service (2A): Service port/Power supply port.

This port is for future software upgrades.

Provides up to 2A of power to a connected USB device, such as HDMI streaming media or presenter sticks. The actual amount of power consumption depends on the connected device. Make sure to use a USB cable that supports 2A.

Enable [USB POWER] in the [USB] settings of the [SYSTEM] menu in the OSD. See page 108.

Please refer to the specifications pages for power supply information. See page 79.

Imports or exports the monitor settings via the USB storage device when selecting [CLONE SETTING].

NOTE: When connecting a color sensor to the Service (2A) port, please set [EXTERNAL CONTROL] in [USB] to [DISABLE].

⚠ **CAUTION:** Pleaser refer to "CAUTION 2".

NOTE:
- Please make sure the connector shape and orientation is correctly aligned when connecting the USB device or cable.
- Connecting/disconnecting a USB storage device with the monitor already powered on is not recommended. To prevent damage to the monitor and possible corruption of the connected device's data files, the monitor's main power switch should be off before making connections or disconnections.

Chapter 4 Basic Operation

This Chapter Includes:

- ⇨ “Power ON and OFF Modes” on page 36
- ⇨ “Operating Range for the Remote Control” on page 37
- ⇨ “Using Power Management” on page 37
- ⇨ “Showing the Information OSD” on page 38
- ⇨ “Switching Between Picture Modes” on page 38
- ⇨ “Setting the Aspect Ratio” on page 39
- ⇨ “Using Point Zoom” on page 40
- ⇨ “OSD (On-Screen Display) Controls” on page 41

Power ON and OFF Modes

Press the ⏻ button on the Control Panel or POWER ON button on the remote control to turn on the monitor.

The monitor's power LED indicates the current status of the monitor. Please refer to the following table for information about the power indicator.

Power indicator status and lighting pattern	Condition	Recovery
Glowing blue	Normal	1. Turn on the monitor by the remote control or the monitor button. 2. Send an AV signal input to the monitor.
Blinking green*1	Under any of the conditions below, no input signal has been detected by the monitor during the period of time you set: • The monitor is using an Option Board*2. • [USB POWER] is set to [ON]. • [SLOT POWER] is set to [ON]. • [POWER CONTROL LINK] of [CEC] is set to [ENABLE]. • [DisplayPort VERSION] is set to [1.2 MST] or [1.4 MST]. • [QUICK START] is [ENABLE].	
Glowing amber	No AV signal input has been detected by the monitor during the period of time you set. (with network signal input)	
Blinking amber	No AV signal input has been detected by the monitor during the period of time you set. (no network signal input)	
Glowing red	Turn off the monitor by the remote control or the monitor button.	Turn on the monitor by the remote control or the monitor button.

*1: Time setting for auto power save is available at [POWER SAVE SETTINGS] (See page 102).
*2: [SLOT POWER] is [ON] or [AUTO].

NOTE:
- The blue power indicator that the monitor is powered on and functioning normally can be turned off in the monitor's OSD menu options. See page 107.
- If the indicator is blinking red in a combination of long and short durations, a certain failure might have occurred. Please contact your supplier.

The Main Power switch must be in the ON position in order to power up the monitor using the POWER ON button on the remote control or the ⏻ button on the Control Panel.

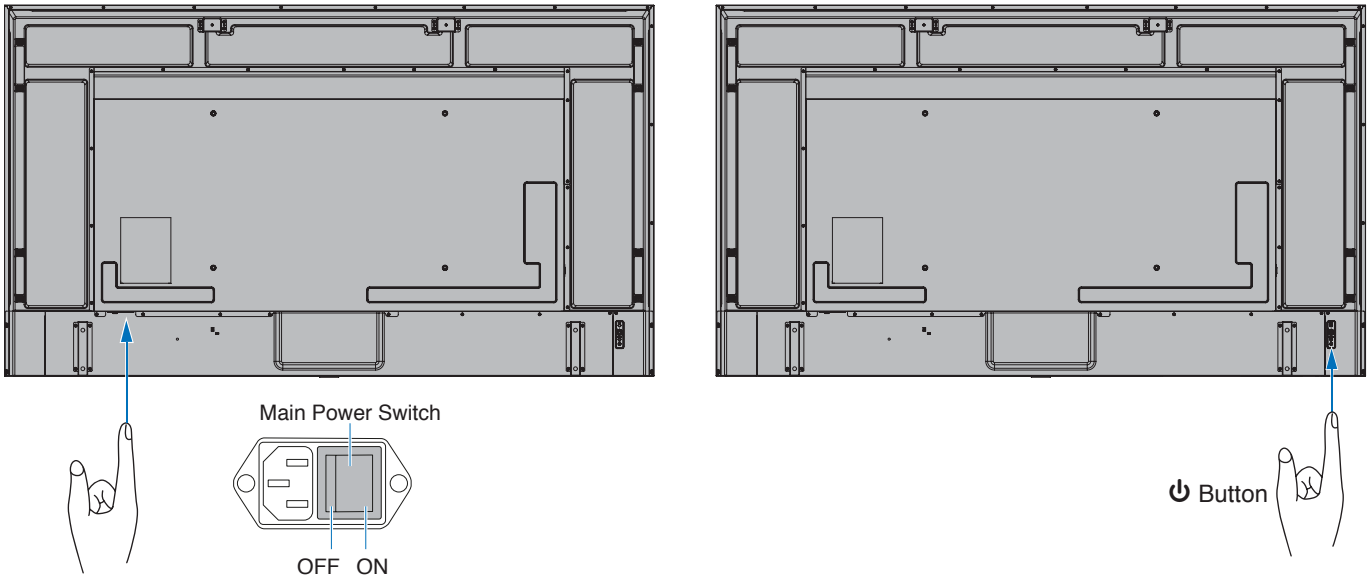

Operating Range for the Remote Control

Point the top of the remote control toward the monitor's remote control sensor during button operation.

Use the remote control within a distance of about 7 m (23 ft.) from the remote control sensor, or at a horizontal and vertical angle of within 30° and within a distance of about 3.5 m (10 ft.).

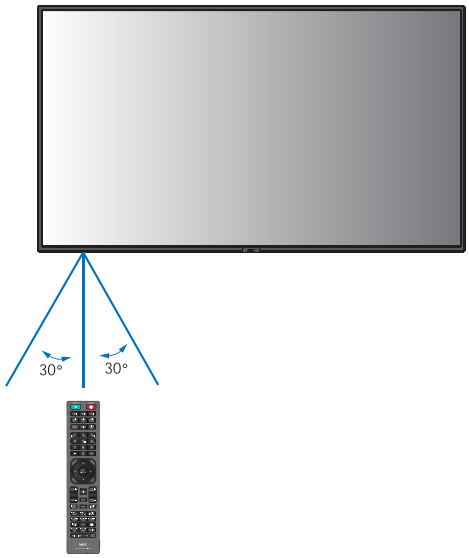

NOTE: The remote control system may not function when direct sunlight or strong illumination strikes the remote control sensor, or when there is an object in the path.

Handling the remote control

- Do not expose to strong shock.
- Do not allow water or other liquid to splash on the remote control. If the remote control gets wet, wipe it dry immediately.
- Avoid exposure to heat and steam.
- Except to install the batteries, do not open the remote control.

Using Power Management

This function decreases the power consumption of the monitor when it is not in use.

When connected to a computer, power consumption by the monitor reduces automatically if the keyboard or mouse are not used during the time set in the computer's power management settings. Refer to your computer's user manual for more information.

When connected to an AV source, such as a Blu-ray, DVD, or streaming video player, power consumption by the monitor reduces automatically after a certain amount of time has passed since the monitor recognized "no signal input". This option is turned on or off in the [POWER SAVE] settings in [POWER SAVE SETTINGS] menu of the OSD. See page 102.

NOTE:
- Depending on the computer and display card used, this function may not operate.
- After the video signal is lost, the monitor automatically turns off after a preset time period. Please refer to the [TIME SETTING] in [POWER SAVE SETTINGS] page 102.
- Schedules can be created for the monitor to power on or standby at specific times. See page 44.
- Please refer to the [POWER SAVE] in [POWER SAVE SETTINGS] for the power management function.

Showing the Information OSD

The Information OSD provides information such as: Input Source, etc.

Press the DISPLAY button on the remote control to bring up the Information OSD.

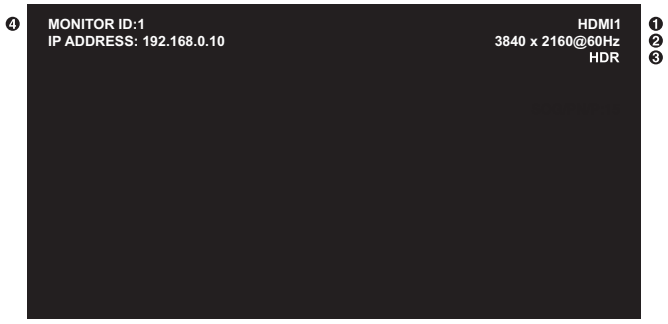

❶ Input name

❷ Resolution Information

❸ HDR Information

❹ Communication Info*

* Shows when [COMMUNICATION INFO.] is [ON].
Green: Connected LAN
Red: Not connected LAN

Switching Between Picture Modes

Press the PICTURE MODE button on the wireless remote control to cycle through the picture modes [NATIVE], [RETAIL], [CONFERENCING], [HIGHBRIGHT], [TRANSPORTATION] and [CUSTOM].

The picture modes are pre-configured with settings for general use. See “Using Other Picture Modes” on page 51 for instructions on changing the picture mode settings.

Setting the Aspect Ratio

Press the ASPECT button on the remote control to cycle through the options available for the current input signal.

For DisplayPort1, DisplayPort2, OPTION (DisplayPort)*1

- [FULL] → [1:1] → [ZOOM] → [NORMAL]

For HDMI1, HDMI2, OPTION (TMDS)*1, COMPUTE MODULE*2

- [FULL] → [WIDE] → [1:1] → [ZOOM] → [NORMAL]

*1: This function depends on which Option Board is installed in the monitor.
*2: This input is available when the optional Raspberry Pi Compute Module Interface Board and Raspberry Pi Compute Module are installed.

Aspect ratio of image	Unchanged view*3	Recommended selection for picture aspect*3		Description
4:3	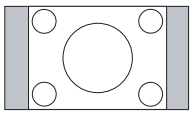	[NORMAL]	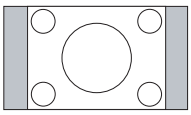	Reproduces the aspect ratio that is sent from the source.
Squeeze	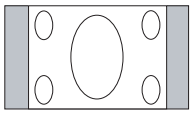	[FULL]	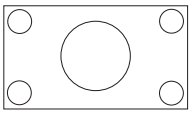	Fills the entire screen.
Letterbox	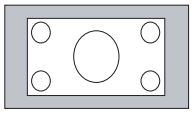	[WIDE]	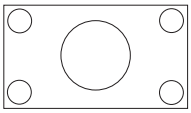	Expands a 16:9 letter box signal to fill the entire screen.

*3: Gray areas indicate unused portions of the screen.

[1:1]: Shows the image in a 1 by 1 pixel format.

[ZOOM]: The zoom function increases the image size, which expands the image beyond the active screen area. The parts of the image outside the active screen area are not shown.

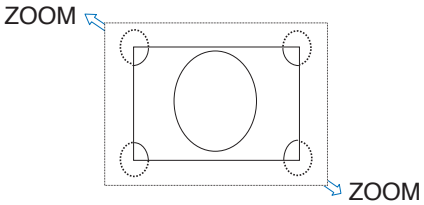

Using Point Zoom

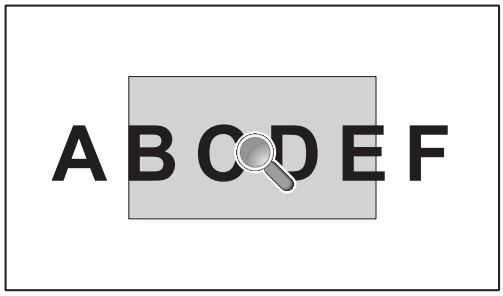

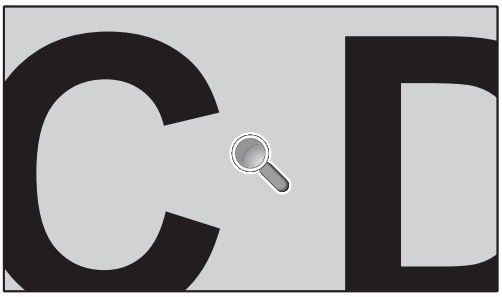

The POINT ZOOM function increases the image size and expands it horizontally and vertically simultaneously. The image can be increased up to 10 times its size.

1. Press the SET/POINT ZOOM button on the remote control. A magnifier icon appears on-screen.
2. Move the magnifier to the area of the image you want to focus on by pressing the ▲ ▼ ◀ ▶ buttons.
3. Press the CH/ZOOM+ button to zoom in. Press CH/ZOOM– button to zoom out. When zooming in, the image expands past the active screen area. The area at the magnifier location shifts closer to the center of the screen at each magnification level.
4. Press the SET/POINT ZOOM button to close the magnifier.
5. The image will remain zoomed in after closing the magnifier. Press the EXIT button to return to the normal image size.

NOTE:
- The image may look distorted when using this function.
- This function is disabled when one of these functions is active: [MOTION] in [SCREEN SAVER], [TILE MATRIX], [MULTI PICTURE], [IMAGE FLIP], [QUICK INPUT CHANGE], [MODE1] or [MODE] in [CEC], [DUAL DAISY CHAIN MODE], [ROTATE] or if input is set to [DisplayPort1] and the [DisplayPort VERSION] is set to [1.4].
- The STILL function does not work when the POINT ZOOM function is active.
- When the [ASPECT] setting is [ZOOM], pressing the POINT ZOOM button automatically sets the [ASPECT] to [FULL] and then starts the POINT ZOOM function.
- After exiting POINT ZOOM, the [ASPECT] will return to the previous [ASPECT] setting. When the [ASPECT] is changed during the POINT ZOOM operation, [ZOOM] will be set to [FULL].
- The magnifier icon will not move outside the active picture area.
- The image returns to the normal size after changing the input signal or when the monitor is powered off.
- POINT ZOOM is not available with DisplayPort signal 4K (60 Hz) 10bit.
- This function is released when one of these functions is active while this function is operating: [MOTION] in [SCREEN SAVER], [TILE MATRIX], [MULTI PICTURE], [IMAGE FLIP], [QUICK INPUT CHANGE], [MODE1] or [MODE] in [CEC], [DUAL DAISY CHAIN MODE], [AUDIO INPUT], [ROTATE] or if input is set to [DisplayPort1] and the [DisplayPort VERSION] is set to [1.4].

OSD (On-Screen Display) Controls

NOTE: Some menus may not be available depending on the model or optional equipment.

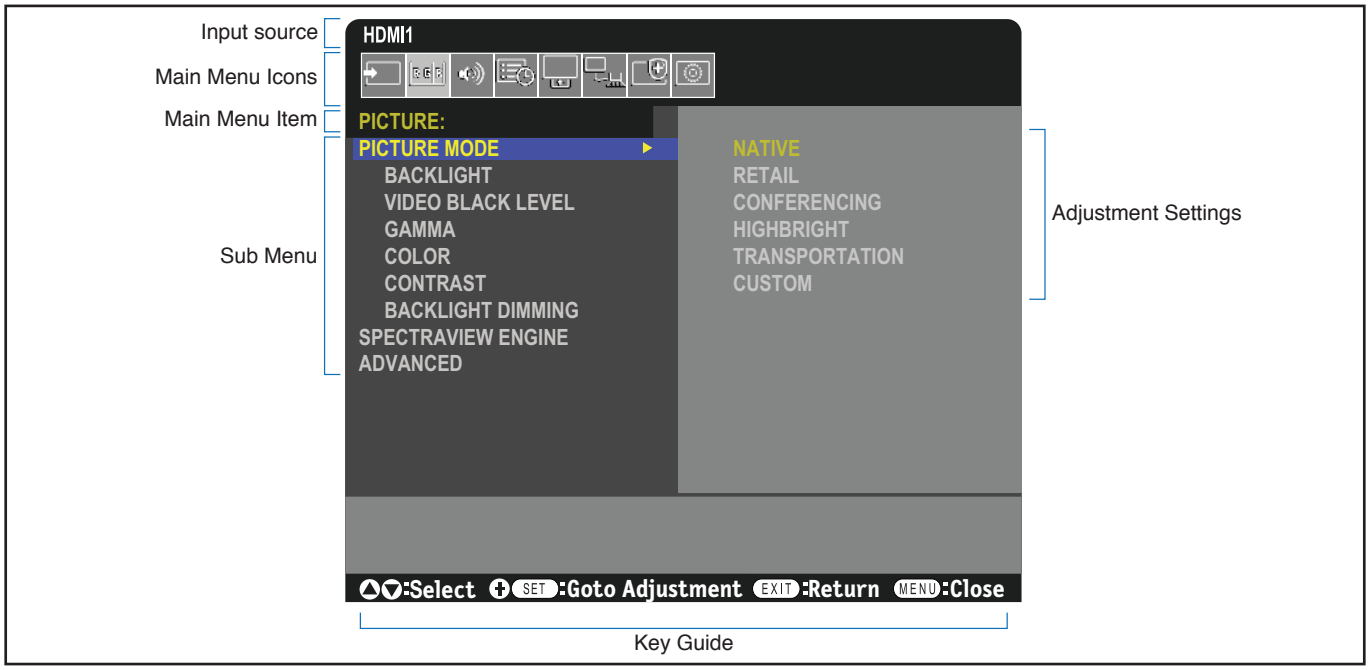

Remote Control

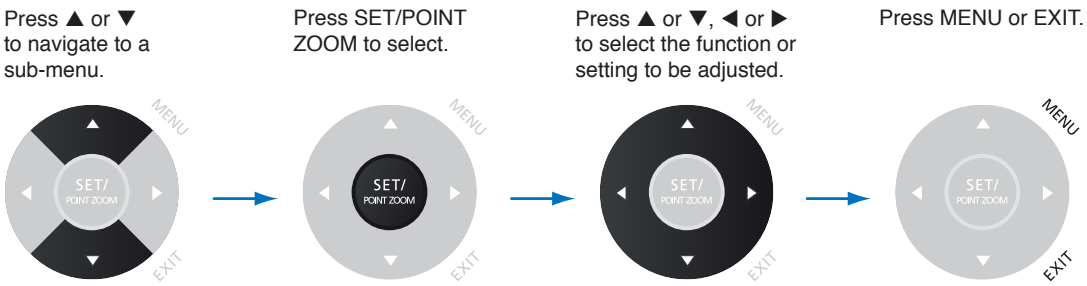

Control Panel

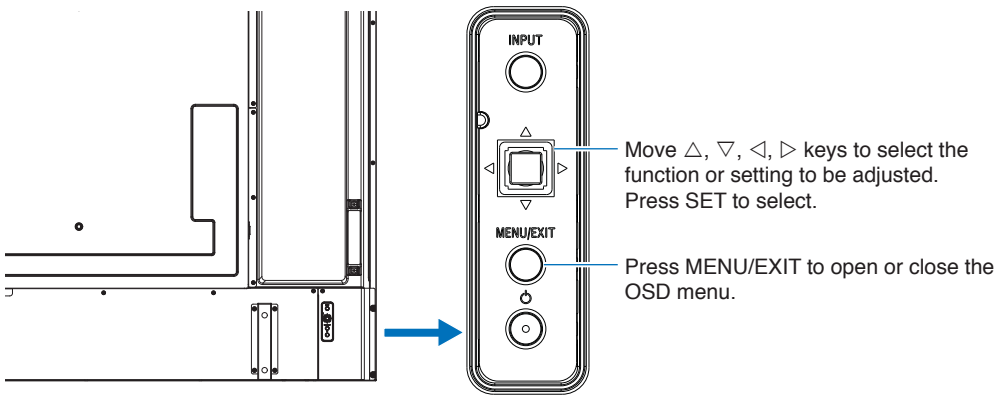

Below is a brief summary of where controls are under each menu item. A table listing all options is located in “OSD Controls List” on page 86.

	INPUT: Select settings related to the input signal source.
	PICTURE: Select one of the default picture modes, manually adjust the color settings, adjust the aspect ratio, and adjust other settings related to the picture.
	AUDIO: Adjust volume, balance, equalizer, and select settings related to the audio.
	SCHEDULE: Create auto power on/off schedules, set the daylight savings time, and off timer.
	SLOT: Select settings related to an Option Board if installed.
	NETWORK: Set network information, security, etc.
	PROTECT: Select options related to protecting the monitor hardware, such as configuring the cooling fans, adjusting automatic power save and power on delay, and enabling the alert mail to be notified when an error occurs in the monitor.
	SYSTEM: View the monitor information, set the date and time, select the languages of the on-screen display menu, or perform a factory reset.

Chapter 5 Advanced Operation

This Chapter Includes:

- ⇨ “Creating a Power Schedule” on page 44
- ⇨ “Advanced Color Adjustment” on page 45
- ⇨ “Using Other Picture Modes” on page 51
- ⇨ “Setting Security and Locking the Monitor Controls” on page 52

Creating a Power Schedule

The schedule function allows the monitor to automatically change between power on and standby modes at different times.

To program the schedule:

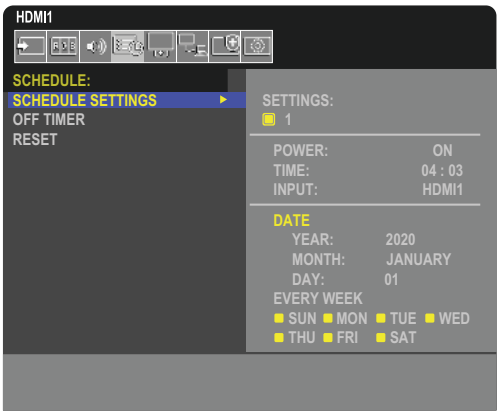

1. Enter the [SCHEDULE] menu.

   ① Using the remote control, highlight [SCHEDULE SETTINGS] using the ▲ and ▼ buttons.

   ② Press the SET/POINT ZOOM or the ▶ button to enter the Settings menu.

   ③ Highlight the desired schedule number and press SET/POINT ZOOM button.

   ④ The box next to the number will turn yellow.
   The schedule can now be programmed.

2. Use the ▼ button to highlight the [POWER]. Use the ◀ and ▶ buttons to set [ON].

   To set a power off schedule, set [OFF].

3. Use the ▼ button to highlight the [TIME]. Use the ◀ and ▶ buttons to set the time.
4. Use the ▲ and ▼ buttons to highlight [INPUT]. Use the ◀ and ▶ buttons to choose the input source.
5. Use the ▼ button to select [DATE] or [EVERY WEEK]. Press the SET/POINT ZOOM button on a menu which is suitable for the schedule.

   If the schedule is to be run on a specific day, choose [DATE] and press the SET/POINT ZOOM button.

   If a weekly schedule is desired, choose the [EVERY WEEK] using the ▲ and ▼ buttons and pressing SET/POINT ZOOM button to select. Then select the specific day and press SET/POINT ZOOM button.

6. After a schedule is programmed, the remaining schedules can then be set. Press MENU button to leave the OSD or press EXIT button to go back to the previous menu.

NOTE:
- The [DATE & TIME] needs to be set before adding schedules.
- Schedules you configure are saved when exiting the [SCHEDULE INFORMATION] window.
- If multiple schedules are set to start at the same time, the conflicting schedule with the highest number is given priority.
- Schedules will not run when the [OFF TIMER] is set to [ON].
- If the input is no longer valid, the text displays in red.
  For example, if the following settings are changed after the input is set for the schedule, the text changes to red and input changing does not occur:
  - [DUAL DAISY CHAIN MODE] is set to [ENABLE] in [VIDEO OUT SETTINGS] or
  - [AUTO INPUT CHANGE] is set to [CUSTOM DETECT] but the input selected at schedule is not selected in [CUSTOM DETECT].
- Schedules do not run while the [SCHEDULE INFORMATION] menu is open.

Set date and time to the monitor:

TIME ZONE: Set the time difference between the region where the monitor is used and the UTC (Universal Time, Coordinated).

- Initial value: +00:00.
- When using the monitor in Japan, set the time as [+09:00].

INTERNET TIME SERVER: Automatically sets the date and time by synchronizing with the NTP server on the network.

- When synchronizing the time with the NTP server on the network to obtain the correct time, set [INTERNET TIME SERVER] to [ON]. Then enter the IP address of the NTP server or the [HOST NAME] and perform [UPDATE].

IMPORTANT:
- When a period of about one week has passed after disconnecting the power cord of the monitor, the time will be initialized and the clock function will stop. When initialized, the date becomes [01.01.2020] and the time becomes [00:00]. If the clock function has stopped, configure the [DATE & TIME] again.

Advanced Color Adjustment

The SpectraView Engine (SVE) is a custom color processor engine integrated in the monitor. It combines individual characterization and calibration of the monitor during production together with temperature and time monitoring, to provide an unparalleled level of color control, accuracy and stability.

Adjustable color uniformity correction is available, utilizing detailed individual factory screen measurements together with the SVE to produce the best possible matching displays.

The SVE provides the utmost in versatility; from faster and more advanced color calibration, to the ability to accurately emulate colorspaces such as Adobe®RGB and sRGB, to performing printer output emulations using ICC Profiles and internal 3D Look Up Tables.

The SVE can operate in one of two modes: On or Off.

To enable or disable the SpectraView Engine using the remote control:

1. Using the remote control, press the MENU button.
2. Navigate to the [PICTURE] menu then to [SPECTRAVIEW ENGINE].

   Use the ▲▼ ◀ ▶ buttons to navigate the OSD menu.
3. Highlight [ON] or [OFF] and press SET/POINT ZOOM to enable or disable the SpectraView Engine.
4. Press EXIT button to return to the main [PICTURE] menu.

Using the SpectraView Engine

When the SVE is on, the monitor's internal processor will handle many of the color management features and the user color controls allow a unique level of precision to be achieved. The white point is adjusted using a CIE x, y control and the grayscale response of the display is calculated and managed by the monitor itself.

The SVE includes Uniformity Correction, where different levels of compensation can be selected to enable a trade-off between the most uniform brightness and color vs. maximum brightness.

The SVE has five Picture Mode memories that can be individually configured and selected. Each individual Picture Mode can store fully customized color settings. This allows you to quickly switch between different settings by just changing between picture modes.

Using the SVE will also give access to other advanced functionality, such as the ability to emulate several modes of human color vision deficiency as well as the ability to select the monitor's output color gamut.

To change the settings in each SVE picture mode:

Presets have been configured with settings for general use as described in the "Preset Types" table next page. When choosing a preset for the SVE picture mode, all of the settings are immediately adjusted to match the preset. Each setting can be individually adjusted to customize as needed.

1. Using the remote control, press the MENU button.
2. Navigate to the [PICTURE] menu then to [PICTURE MODE].

   Use the ▲▼ ◀ ▶ buttons to navigate the OSD menu.
3. Press the ▶ button to navigate to the [PICTURE MODE] field.
4. Select a setting from 1 through 5 at [PICTURE MODE].
   - 1 → 2 → 3 → 4 → 5

5. Select a preset item at [PRESET].

   Choose the [PRESET] that is most suitable for the type of content that is shown or application usage.

   Each [PICTURE MODE] includes [LUMINANCE], [BLACK] (Black level), [GAMMA], [WHITE (K)] (color temperature), [WHITE (x, y)] (White point CIE x, y), [RED] (Red Primary CIE x, y), [GREEN] (Green Primary CIE x, y), and [BLUE] (Blue Primary CIE x, y), settings. You can change these settings in the “Picture Mode” menu.

   If any settings need to be changed, press the ▼ button to navigate through the settings and make any adjustments needed using the ◀ ▶ buttons.

6. Press EXIT button to return to the main [PICTURE] menu.

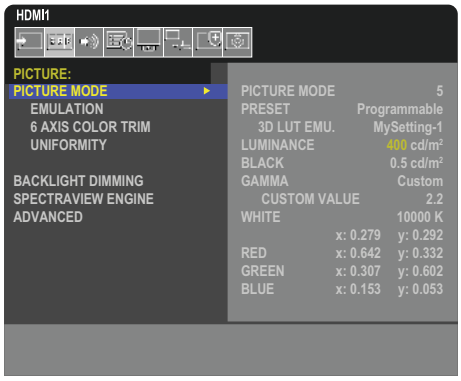

NOTE: • Changing the settings in the [PICTURE MODE] menu does not change the default settings for the [PRESET].
• “∗” mark is shown if the Picture Mode settings have been changed from the default preset settings.

Preset Types

PRESET	PURPOSE
sRGB	The standard color setting of the Internet, Windows® operating systems, and many smart-phone and other digital cameras. Recommended setting for general color management.
AdobeRGB	Wider color gamut setting used in high-end graphics applications such as professional digital still cameras and printing.
eciRGB_v2	Color setting recommended by Europe printing group, ECI (The European Color Initiative).
DCI-P3	Color setting for digital cinema.
Rec.709	Color setting for High-definition television.
Rec.2100 (HLG)	Color setting for HDR (High Dynamic Range) broadcasting.
Rec.2100 (PQ)	Color setting for HDR (High Dynamic Range) digital cinema on disc and internet streaming.
Low Blue	Reduces blue light emitted from the monitor. Paper-like color setting. (The Low Blue function substantially reduces blue light and helps to alleviate eye-strain.)
Signage	Color setting for use in digital signage applications with high ambient lighting conditions where a bright and high color temperature white point may be desirable.
TV Studio	Color setting for use with “on set shooting” where the monitor’s screen will be captured by the camera and should match the studio set’s incandescent lighting.
Full	Native LCD panel color gamut. Suitable for use with color managed applications.
DICOM sim.	Color setting for medical imaging that conforms to DICOM GSDF (Grayscale Standard Display Function). NOTE: Do not use for diagnostic purposes.
Programmable	Programmable preset for MultiProfiler and other supported software. The preset name can be changed by software.

SpectraView Settings

SVE SETTINGS	PURPOSE	
LUMINANCE	Adjusts the overall image and screen background luminance. When the setting is too high to show, the OSD characters are changed to yellow.	
BLACK	Adjusts the black luminance. When the setting is too low to show, the OSD characters are changed to yellow.	
GAMMA	Allows you to manually select the brightness level of grayscale.	
	sRGB:	Gamma setting for sRGB.
	L Star:	Gamma setting for the CIELAB color space Lab.
	Rec.1886:	Gamma setting for HDTV broadcasting.
	HDR-Hybrid Log:	Gamma setting for HDR, typically for UHD broadcasting. System gamma can be adjusted.
		SYSTEM GAMMA: System gamma is adjustable in 0.5-2.0 range. When “Auto” is selected, the system gamma is automatically selected according to the “Luminance” setting.
	HDR-ST2084 (PQ):	Gamma setting for HDR, typically for UHD disk media and streaming videos. Peak luminance value is adjustable.
		PEAK LUMI.: Sets the peak luminance value to show HDR-ST2084 (PQ) luminance range. A larger value will improve white saturation but the picture become darker. When “Auto” is selected, “Luminance” is used as the peak luminance setting.
	DICOM:	DICOM GSDF (Grayscale Standard Display Function) is typically used for medical imaging.
	Programmable:	A programmable gamma curve can be loaded using our optional software.
	Custom:	CUSTOM VALUE: The gamma value is selected from a range from 0.5 to 4.0 in 0.1 steps. For general images 2.2 is used. Increasing the value will make the intermediate color darker, and lowering the value will make the intermediate color brighter.
	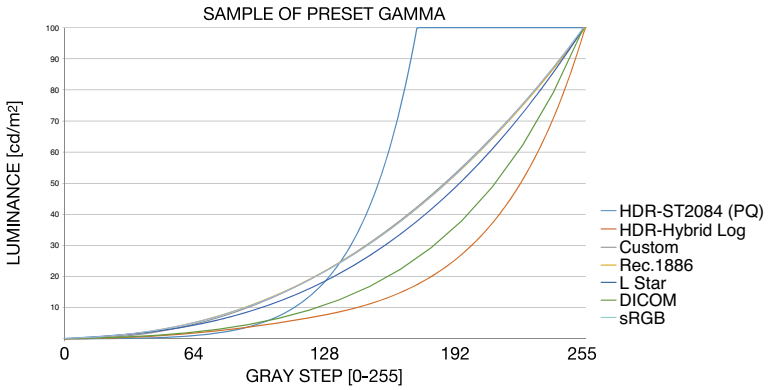	
WHITE (K) WHITE (x, y)	Adjusts the white by color temperature (K) or CIE x, y setting. A lower color temperature will result in a reddish screen and a higher color temperature in a bluish screen. A larger x value will result in a reddish screen, a larger y value changes the screen to greenish, and smaller x,y values will change the screen to bluish white.	
	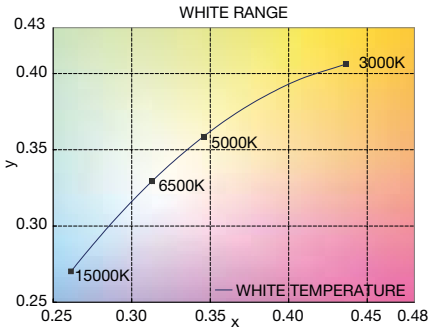	

SVE SETTINGS	PURPOSE
RED (x,y) GREEN (x,y) BLUE (x,y)	Adjusts the color gamut. Set chromaticity with CIE x, y coordinates. It affects all colors except achromatic like white and gray. 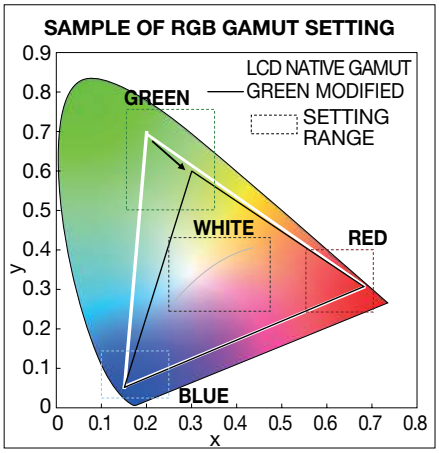

NOTE:
- Settings for [EMULATION], [6 AXIS COLOR TRIM], and [UNIFORMITY] are also stored to each [PICTURE MODE].
- If the ICC Profile on your computer doesn't match the monitor's settings then color reproduction may be inaccurate.
- For detailed color settings and to set the ICC profile on your computer automatically, MultiProfiler software is recommended. Connecting PC and the monitor with a USB cable is recommended. See page 85.

Using Stand-alone calibration

This feature performs color calibration of the monitor without using an external computer or software. This is useful for color matching a small number of monitors quickly. It also updates the factory color measurement data used by the monitor's internal SpectraView Engine (SVE) color processor.

Updating the factory color data with measurements taken from a color sensor results in color related settings, shown on the OSD, closely matching measurements from the color sensor. In effect, the color sensor's measurements become the new reference for all of the SVE's internal color calculations. All color presets in the monitor automatically update to use the new reference.

Requirements for Stand Alone Calibration:

- MDSVSENSOR 3 color sensor. This sensor connects directly to the USB Service (2A) port on the monitor. The monitor automatically takes screen measurements directly from the color sensor. See Appendix A for purchase and availability information.

  Or
- A near-range colorimeter with a measurement readout display in CIE Y/x, y format with Y in units of cd/m^2. Measurements are taken manually and each reading must be entered into the monitor via the OSD using the remote control. [VALIDATION] and [WHITE COPY] are not available.

  NOTE: Other color sensor models and types are not supported.

NOTE:
- For best calibration results, it is recommended the monitor be allowed to warm up for at least 30 minutes before starting the calibration or measurement process.
- It is not necessary to recalibrate the other Picture Modes in the monitor after performing the Self Calibration. Updating the monitor's internal reference automatically updates all color settings.
- The original factory measurements can be restored at any time.
- Access to each monitor's USB Service (2A) port is necessary to use this feature with the MDSVSENSOR 3 color sensor. Be sure to provide adequate access when installing the monitors.
- Differences between the factory color measurements and those taken with a color sensor are to be expected. Differences can be due to many factors, such as variations between color sensor measurement technologies and device calibration and drift, measurement position on the screen, and video signal differences.
- For color matching and managing a large number of monitors, the Display Wall Calibrator software is recommended. See Appendix A for details.
- To open Stand Alone Calibration OSD menu, select Calibration (see page 92) on the OSD. Please make sure [SPECTRAVIEW ENGINE] is [ON] (see page 92).

To open the STAND-ALONE CALIBRATION window using the remote control:

1. Press the MENU button.
2. Navigate to the [PICTURE] menu then to [SPECTRAVIEW ENGINE].

   Use the ▲▼ ◀ ▶ buttons to navigate the OSD menu.
3. Highlight [ON] and press SET/POINT ZOOM button to enable the SpectraView Engine.
4. Navigate to [CALIBRATION] then press SET/POINT ZOOM button. The STAND-ALONE CALIBRATION window appears.
5. Highlight a menu then press SET/POINT ZOOM button.
6. Press the EXIT button to close the OSD menu.

Follow the instructions on the OSD message.

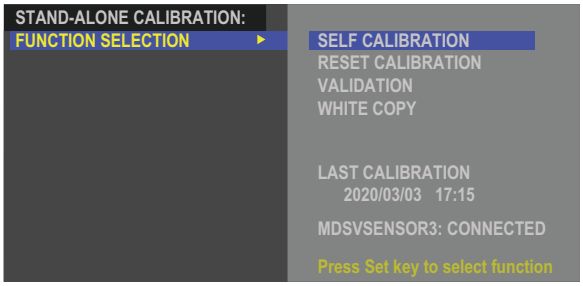

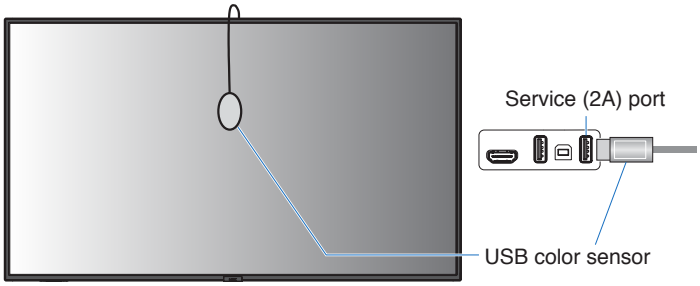

Self calibration

This function updates the monitor's internal SpectraView Engine color processor to use measurements taken using a supported color sensor device. These measurements will become the reference for all color settings in the monitor.

When an MDSVSENSOR 3 color sensor is connected to the monitor's USB Service (2A) port, the monitor takes measurements and is calibrated automatically. Place the color sensor at the center of the screen and follow the messages shown.

Otherwise, if using a near-range colorimeter device, measurements must be taken manually with the device and the CIE Y/x/y values individually entered via the OSD using the remote control. Y is in units of cd/m^2.

Depending on the monitor usage and other factors, performing a Self Calibration at least once per year is recommended.

Reset calibration

This deletes the color measurement data created by the Self Calibration function and returns to the original factory internal reference color measurement data. All Picture Modes will automatically be updated. If you are using Display Wall Calibrator, uniformity adjustment data is also deleted.

Validation

This can be used to determine if the Self Calibration operation should be performed.

It compares measurements taken of various color patches on the screen by the color sensor with the expected values calculated by the SVE, which uses the current internal reference color measurement data. The result of this comparison is indicated as an average color difference (dE) value. Larger values mean there is a larger difference between the measurements and the internal reference. If the dE value is higher than 3.0, Self Calibration is recommended to update the internal reference color data.

The Self Calibration function must have been previously performed before this function is available on the OSD menu.

NOTE:
- [Self calibration], [Validation] and [WHITE COPY] are not available if the input is [DISPLAYPORT1] then [DisplayPort VERSION] is set [1.4].
- The date and time stamped results of the "Self calibration" and "Validation" functions are stored in the monitor and can be read by software on your computer. Setting the [YEAR], [MONTH], [DAY] and [TIME] in [SYSTEM] → [DATE & TIME] OSD menu is required for this function.

White copy

This function can be used to “copy” the luminance and white point from another monitor when used in a multi-monitor installation. This process is done by measuring the color of a monitor and setting those measured values into the monitor being adjusted. This can be useful in situations where it is necessary to match a monitor in color to neighboring monitors without having to recalibrate all monitors.

Before starting, it is necessary to input a full-white video signal to all of the monitors. Select the monitor that will be used as the Target – or source - of the copy operation (A).

This function will measure the luminance and white point of the target monitor (A), and set these values to the current Picture Mode of the destination monitor (B).

You can also fine-tune the measurement result while checking the screen color. If you want to return to the measured value, select re-measurement.

The Self Calibration function must have been previously performed before this function is available on the OSD menu.

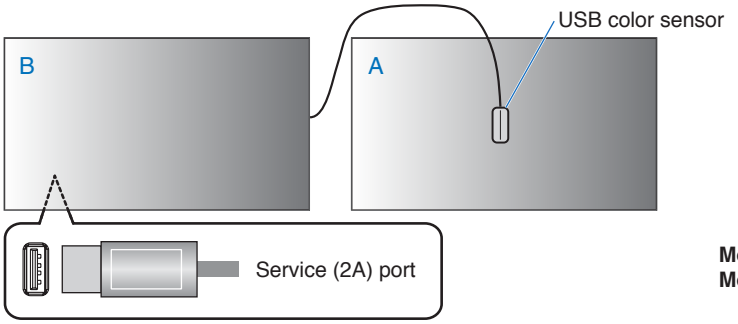

Monitor A – SOURCE monitor of white point to copy.
Monitor B – This monitor which performs a copy.

NOTE: When adjusting the color of multiple monitors, we recommend that you perform [SELF CALIBRATION] from [WHITE COPY].

Using Other Picture Modes

There are different picture modes available when the SpectraView Engine is off in the OSD menu. These picture modes have also been configured with settings as described in the "Picture Mode Types" table below.

To change picture modes:

Press the PICTURE MODE button on the wireless remote control to cycle through the modes, or select the mode in the [PICTURE] list in the OSD menu.

These picture modes are available based on the selected input:

- For [DisplayPort1], [DisplayPort2], [HDMI1], [HDMI2], [COMPUTE MODULE]*2, [OPTION*1]

  NATIVE → RETAIL → CONFERENCING → HIGHBRIGHT → TRANSPORTATION → CUSTOM

  *1: This function depends on which Option Board is installed in the monitor.

  *2: This input is available when the optional Raspberry Pi Compute Module Interface Board and Raspberry Pi Compute Module are installed.

Picture Mode Types

PICTURE MODE	PURPOSE
NATIVE	Standard setting.
RETAIL	Bright, vivid colors ideal for advertising and branding.
CONFERENCING	Lower color temperature and optimized natural human complexions.
HIGHBRIGHT	Maximum backlight brightness with higher color temperature for brighter ambient environments.
TRANSPORTATION	Maximum backlight brightness with high contrast to read text under all conditions.
CUSTOM	Custom setting.

NOTE: Changing any of the settings of the [PICTURE] in the OSD menu will change the settings for the current input only.

Setting Security and Locking the Monitor Controls

Under normal operation, the monitor can be controlled by any person using the remote control or the monitor control panel. You can prevent unauthorized use and changes to the monitor settings by enabling the options for Security and Lock Settings.

The security and locking functions covered in this section are:

- Setting the password
- Enabling password security
- Locking the remote control buttons (See page 22)
- Locking the monitor control panel buttons (See page 25)

Settings Location

The instructions in this section guide you through configuring security and locking functions in the monitor's OSD menu. These settings can also be configured using the monitor's web controls. See page 67.

The menu options for Security and Lock Settings are in the [PROTECT] menu in both the OSD menu and web controls.

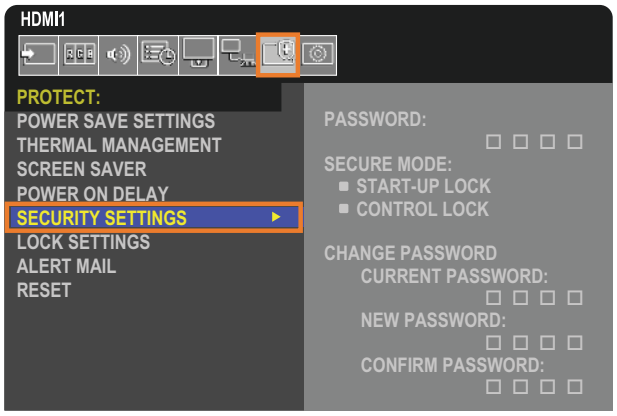

Password Security

When password security is enabled, a four-digit passcode is required when turning on the main power and/or accessing the OSD (see page 53). The monitor will function normally after the password is entered. If no buttons are pressed during the period you set for [OSD TIME], the monitor will return to SECURE MODE automatically and the password will be required again.

NOTE: If you change the password make a note of the password in a secure location. If you forget your password, you will need to contact technical support to get a recovery password to access the monitor OSD menu.

Set a password for the monitor

This step is only required if you want to change the password.

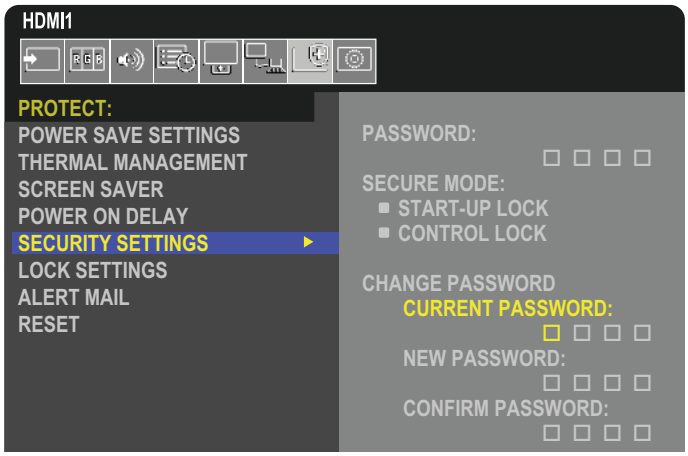

1. Using the remote control, navigate to [PROTECT] then to [SECURITY SETTINGS].
2. Under [CHANGE PASSWORD], enter the password in the [CURRENT PASSWORD] field. (The default password is: 0 0 0 0).
3. Input a [NEW PASSWORD] and then input it again in the [CONFIRM PASSWORD] field.
4. The new password is immediately saved.

Enable password security

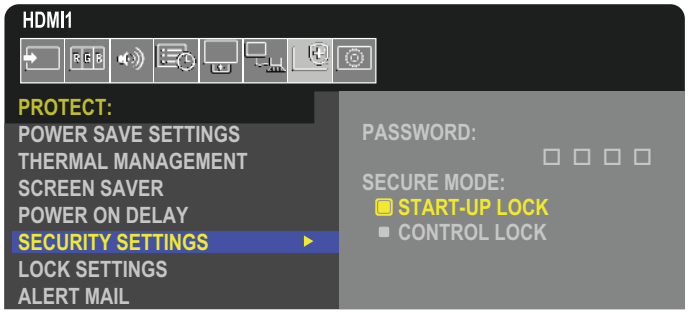

1. Using the remote control, navigate to [PROTECT] then to [SECURITY SETTINGS].
2. Enter the password in the [PASSWORD] field to access the [SECURE MODE] settings.
3. Select the type of [SECURE MODE] you want to use:
   - **[START-UP LOCK]** – the password is required when turning on the monitor from the main power switch.

     When this option is selected the password is only required on power cycle using the main power switch or after power failure. This option does not prompt for a password when using the remote control POWER ON and STANDBY buttons or the ⏻ button on the monitor control panel.
   - **[CONTROL LOCK]** – the password is required to use any of the remote control buttons or buttons on the monitor.

Locking the Button Controls

The lock settings prevent the monitor from responding to button presses on the IR remote control or monitor control panel. When locking the button controls, some buttons can be configured to remain unlocked for users to adjust the settings. Locking and unlocking the button controls do not require a password.

Locking the IR Remote Buttons

The [IR] in the [LOCK SETTINGS] prevent the monitor from being controlled using the remote control. Enabling the [IR] does not lock the buttons on the monitor control panel.

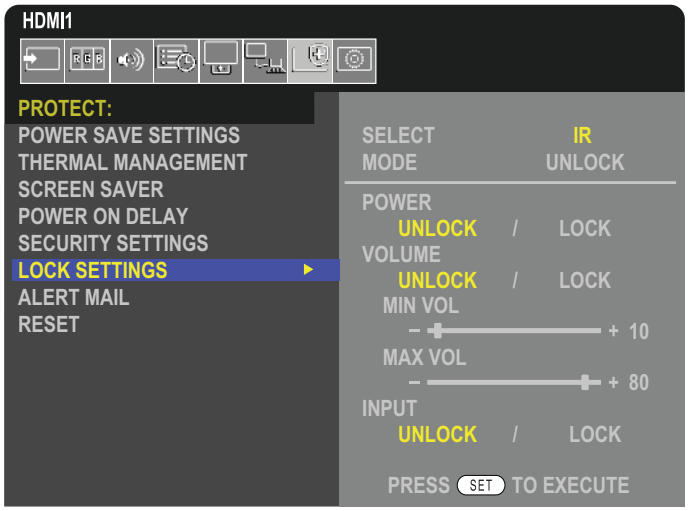

1. Using the remote control, navigate to [PROTECT] then to [LOCK SETTINGS].
2. Under the [SELECT] option, press the ▲, ▼ buttons to change the setting to [IR].
3. Under [MODE] choose the lock mode you want to enable.
   - **[UNLOCK]** – all buttons are unlocked.
   - **[ALL LOCK]** – all buttons are locked.
   - **[CUSTOM LOCK]** – all remote buttons are locked except for the following buttons that can be individually set as locked or unlocked.
     - **[POWER]** – select [UNLOCK] to be able to use the ⏻ button when the IR Remote is locked. Select [LOCK] to lock the button.
     - **[VOLUME]** – select [UNLOCK] to be able to control the volume with the VOL+, VOL– buttons when the IR Remote is locked. Select [LOCK] to prevent volume adjustment.
       - **[MIN VOL]** and **[MAX VOL]** – the volume buttons are unlocked, and the volume level can only be adjusted within the [MIN] and [MAX] range set.

         The [VOLUME] must be set to [UNLOCK] for this setting to operate.

         NOTE: Volume [MIN VOL]/[MAX VOL] lock only works with Internal speaker, Speaker Out connector and Audio Line Out (3.5 mm connector). It does not work when [AUDIO RECEIVER] is set to [ENABLE].
     - **[INPUT]** – select [UNLOCK] to unlock all input buttons. Select [LOCK] to lock all input buttons.
4. Select [SET] to activate all settings.

Unlocking the IR Remote Controls

- IR Remote Control – to return to normal operation, press-and-hold the DISPLAY button for at least 5 seconds.

Locking the Control Panel Buttons and key

The [KEY] in the [LOCK SETTINGS] prevents the monitor from being controlled using the buttons and key on the monitor control panel. Enabling the [KEY] does not lock the buttons on the remote control.

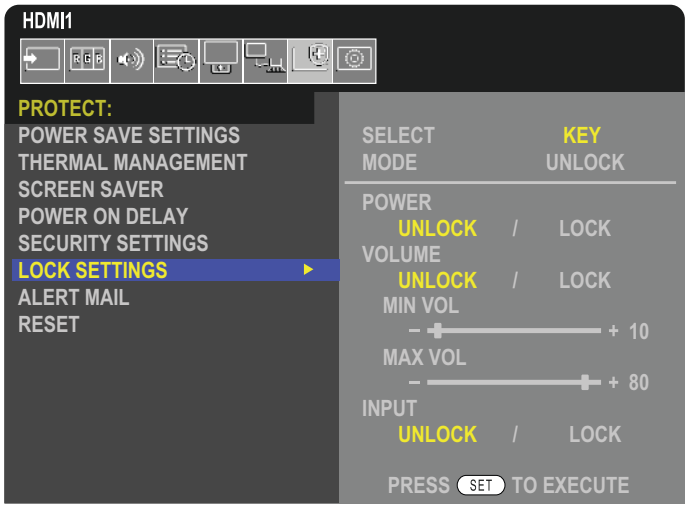

1. Using the remote control, navigate to [PROTECT] then to [LOCK SETTINGS].
2. Under the [SELECT] option, press the ▲, ▼ buttons to change the setting to [KEY].
3. Under [MODE] choose the lock mode you want to enable.
   - **[UNLOCK]** – all keys are unlocked.
   - **[ALL LOCK]** – all key buttons are locked.
   - **[CUSTOM LOCK]** – all key buttons are locked except for the following buttons that can be individually set to be locked or unlocked.
     - **[POWER]** – select [UNLOCK] to be able to use the ⏻ button when the keys are locked.
     - **[VOLUME]** – select [UNLOCK] to be able to control the volume with the ◁/▷ keys when the keys are locked. Select [LOCK] to prevent volume adjustment.
       - **[MIN VOL]** and **[MAX VOL]** – the ◁/▷ keys are unlocked and the volume can only be adjusted within the [MIN] and [MAX] set.

         The [VOLUME] must be set to [UNLOCK] for this setting to operate.

         NOTE: Volume [MIN VOL]/[MAX VOL] lock only works with Internal speaker, Speaker Out connector and Audio Line Out (3.5 mm connector). It does not work when [AUDIO RECEIVER] is set to [ENABLE].
     - **[INPUT]** – select [UNLOCK] to be able to change the inputs using the INPUT button.
4. Select [SET] to activate all settings.

Unlocking the buttons and key on the monitor control panel

Key/Buttons – to return to normal operation unlock all the buttons/keys on the main unit control panel by pressing the SET button and MENU/EXIT button on the main unit control panel at the same time for 3 seconds or longer.

OSD Menu – to return to normal operation, use the remote control to navigate to [PROTECT] then to [LOCK SETTINGS]. Under the [SELECT] option, change the setting to [KEY]. Under [MODE] choose [UNLOCK] and then select [SET].

Locking the IR Remote Buttons and the Control Panel Buttons/key

Select [PROTECT] → [LOCK SETTINGS] → [SELECT] → [KEY & IR] from the OSD menu.

For the subsequent setting procedure, buttons/keys for which the lock is enabled, and unlocking method, refer to "Locking the IR Remote Buttons" and "Locking the Control Panel Buttons and key".

Chapter 6 Multi-Monitor Setup

This Chapter Includes:

- ⇨ “Connecting Multiple Monitors” on page 57
- ⇨ “Video Out Connection” on page 60
- ⇨ “Setting the Remote Control ID Function” on page 61

Connecting Multiple Monitors

Monitors can be connected to each other, both communication and video connections, in multiple monitor installations. Chaining the video connections together creates a video wall where a single image can be tiled across all displays. When connecting multiple monitors to install a video wall, communication and video cable connections are necessary and their configuration must be carefully considered. Please refer to the "Wiring Diagram" on page 28.

The monitor settings for configuring a video wall in the OSD and Monitor Web page settings are under [PICTURE], [SYSTEM].

- [PICTURE-ADVANCED]-[AUTO TILE MATRIX] – automatically configures the multi-display settings when the communication and video ports are chained together. This automatically sets the [MONITOR ID] and position of the monitors in the video wall following the physical wiring between the monitors.

  Input the number of monitors arranged horizontally and vertically on the master monitor. The following settings are set automatically when you run the auto setup: OSD menu [H MONITORS], [V MONITORS], [POSITION], [DisplayPort VERSION], [HDMI MODE], [VIDEO OUT SETTINGS] and Input signal.

  NOTE:
  - [MONITOR ID] in [AUTO ID/IP SETTING] will be automatically executed.
  - This function is released if [MOTION] in [SCREEN SAVER] is activated.
  - If input is DisplayPort 4K (60Hz) 10bit, this function is disabled.

Example of installation via LAN:
H MONITORS 3
V MONITORS 3

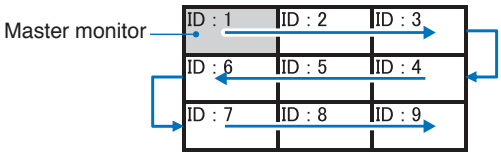

- [PICTURE-ADVANCED]-[TILE MATRIX] – allows one image to be expanded and shown over multiple screens (up to 100) through a distribution amplifier. Manually input the number of horizontal and vertical monitor in the video wall, position of the monitor in the wall, and turn on or off Tile Compensation. When tilting HDCP content, please refer to the "Video Out Connection" on page 60.
  - [TILE COMP] - scales the image to compensate for the width of the screen bezel in order to create a seamless image.
  - [TILE CUT] - select a part of an image to show in full-screen.

    Example of TILE CUT 1x2 (Portrait configuration)

    For the monitor on top:
    1. Set H MONITORS [2] and V MONITORS [2].
       One image will be divided by 4 then put number from 1 to 4.

OSD

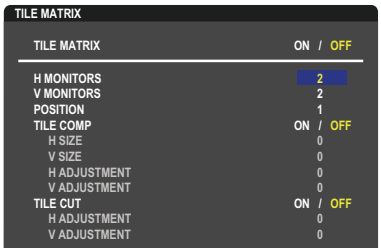

Monitor screen

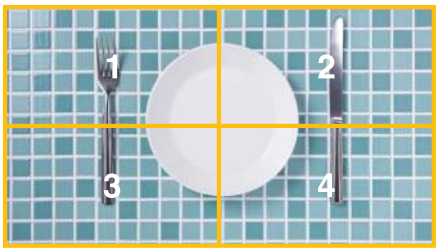

    2. Select 1 to 4 at [POSITION].

e.g. Selecting 1

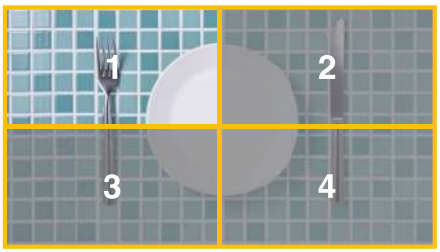

3. With [H ADJUSTMENT] and [V ADJUSTMENT] in [TILE CUT], you can move the selected square to the exact spot you want shown.

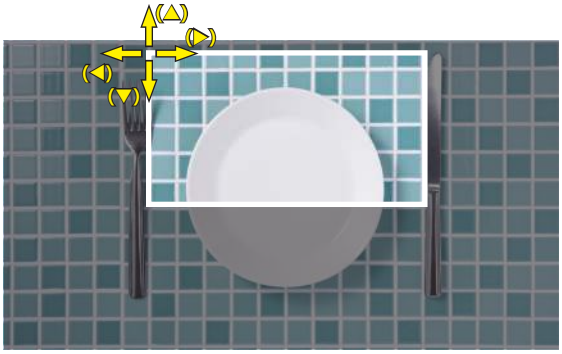

4. Select [ON] at [TILE MATRIX].

For the monitor at the bottom:
Repeat the same steps.

e.g. Selecting 3 at [POSITION]

After individually setting, the 1x2 image (Portrait configuration) will be shown as below.

- [SYSTEM]-[EXTERNAL CONTROL] – sets the monitor ID and group IP for the current monitor. When the monitors LAN ports are chained together, the ID and IP can be automatically assigned to all monitors.
- [SYSTEM]-[CLONE SETTING] – copies some of the OSD menu categories to other monitors in the video wall, when chained together.

- Video daisy chaining.
  We strongly recommend using the same monitor model for all monitors in the connected daisy-chain.

  MONITORS POSITION is different from ID. Please refer to the **figure 1**.

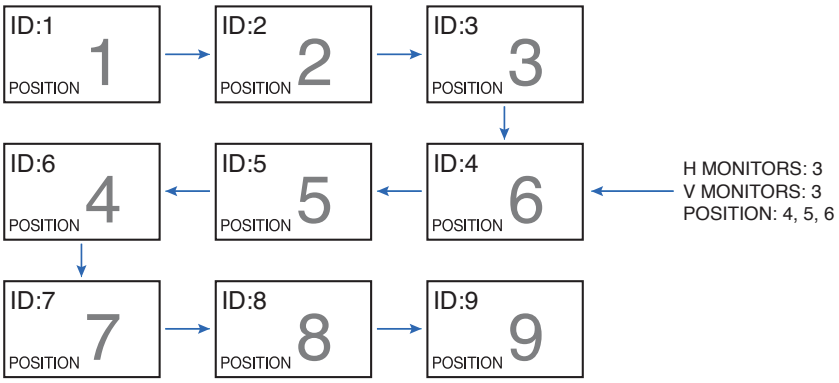

Figure 1

Video Out Connection

Connector	DisplayPort1	DisplayPort2	HDMI1	HDMI2	OPTION		
	DisplayPort1	DisplayPort2	HDMI1 (ARC)	HDMI2	DisplayPort Slot	TMDS Slot	COMPUTE MODULE
DisplayPort	Yes	Yes	No	No	Yes	No	No
HDMI	Yes*1	Yes*1	Yes	Yes	Yes*1	Yes	Yes

*1: By inputting [DP TO HDMI CONVERT] is set to [ENABLE], the DisplayPort input can be HDMI output.
DP and HDMI cannot be output simultaneously.

NOTE: • Video Out cannot be performed when [MULTI PICTURE] or [QUICK INPUT CHANGE] are enabled.

For connecting multiple monitors with HDMI cable

- Use the same monitor model.
- Set the same ([MODE1] or [MODE2]) at [HDMI MODE] in [INPUT-ADVANCED] in all connected multiple monitors.

For HDMI Out and DisplayPort Out

- Select DisplayPort1, DisplayPort2 or OPTION input for the monitor to output a signal from DisplayPort Out.
- Select either the HDMI1, HDMI2 or OPTION input for the monitor to output a signal from HDMI OUT.
- If [DP TO HDMI CONVERT] is set to [ENABLE], even when the OSD menu “INPUT” is set to [DisplayPort1] or [DisplayPort2], the video is output from the HDMI output connector. In this case, the video output of the DP output connector will stop.
- This monitor’s signal output function supports contents protected by HDCP.

  HDCP content can be distributed across multiple connected monitors as described below:

  - HDCP1.3/1.4: Up to 8 monitors (including this monitor).
  - HDCP2.2: Up to 5 monitors (including this monitor).
  - The time until image is shown depends on the number of connected monitors.
  - Without HDCP: Up to 9 monitors (including this monitor).
- When [DUAL DAISY CHAIN MODE] is set to [ENABLE], HDMI and DisplayPort can be output simultaneously. However, one input cannot be output to both HDMI and DisplayPort at the same time.

  Example:

  - Even when [DUAL DAISY CHAIN MODE] is set to [ENABLE], DisplayPort1 cannot be output simultaneously from both HDMI out and DisplayPort out.
  - When [DUAL DAISY CHAIN MODE] is set to [ENABLE], DisplayPort1 can be output from DisplayPort out and HDMI2 can be output from HDMI out.

NOTE:
- Do not turn the main power switch off/on or connect/disconnect the cable while playing HDCP-protected video content in a daisy chain connection. Playback of video content may stop. If playback stops, try playing again.
- Depending on the device you use, the number of monitor connections will change.
- When showing an image in a multi-monitor setting, do not disconnect cables from the monitors. When you disconnect cables, please turn the main power off first.

For HDCP Content

HDCP is a system for preventing illegal copying of video data sent over a digital signal. If you are unable to view material via the digital inputs, this does not necessarily mean that the monitor is not functioning properly. With the implementation of HDCP, there may be cases in which certain content is protected by HDCP and might not be shown due to the decision/intention of the HDCP community (Digital Content Protection, LLC).

Due to these security restrictions in video content, HDCP video content can only be tiled across a limited number of monitors. HDCP video content is generally commercially produced Blu-rays and DVDs, television broadcast, and streaming media services.

Setting the Remote Control ID Function

The remote control can be used to control up to 100 individual MultiSync monitors using what is called the REMOTE CONTROL ID mode. The REMOTE CONTROL ID mode works in conjunction with the Monitor ID, allowing control of up to 100 individual MultiSync monitors. For example, if there are many monitors being used in the same area, a remote control in normal mode would send signals to every monitor at the same time (see **Figure 1**). Using the remote in REMOTE CONTROL ID mode will only operate one specific monitor within the group (see **Figure 2**).

To Set Remote Control ID

While holding down the REMOTE ID SET button on the remote control, use the KEYPAD to input the Monitor ID (1-100) of the monitor to be controlled via remote. The remote control can then be used to operate the monitor having that specific Monitor ID number.

When 0 is selected or when the remote control is in normal mode, all monitors will be operated.

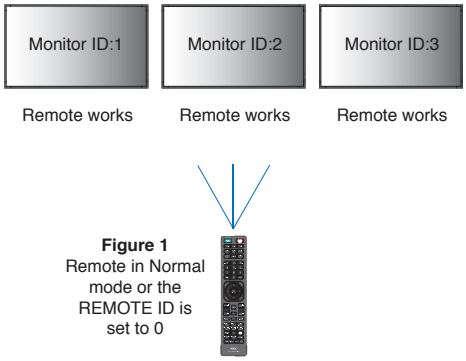

Figure 1
Remote in Normal mode or the REMOTE ID is set to 0

To Set/Reset Remote Control Mode

ID Mode - To enter ID Mode press the REMOTE ID SET button and hold down for 2 seconds.

Normal Mode - To return to Normal Mode press the REMOTE ID CLEAR button and hold down for 2 seconds.

NOTE:
- In order for this feature to work properly, the monitor must be assigned a Monitor ID number. The Monitor ID number can be assigned under the SYSTEM menu in the OSD. See page 104.
- Point the remote control toward the remote sensor of the desired monitor and press the REMOTE ID SET button. The MONITOR ID number is shown on the screen when your remote control is in ID mode.

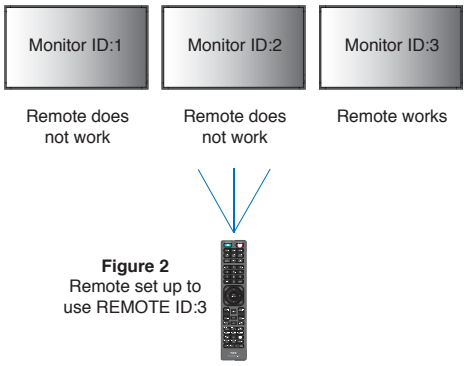

Figure 2
Remote set up to use REMOTE ID:3

You need a remote control for this function.

Use the Remote Control to Control all Monitors in Range

1. On the remote control, press and hold down the REMOTE ID SET button while using the keypad to input the REMOTE CONTROL ID number “0”.
2. All monitors within range of the remote control will now respond to keypad press.

NOTE: When the REMOTE ID is set to “0”, pressing REMOTE ID SET will make all monitors, within range of the remote signal, show their Monitor ID on screen. This way you can easily see what the Monitor ID is if you want to control a single monitor, as described below.

Use the remote control to operate a monitor that has a specific MONITOR ID number assigned to it

1. Set the [MONITOR ID] number for the monitor (see page 104). The [MONITOR ID] number can range from 1-100.

   This [MONITOR ID] number allows the remote control to operate this specific monitor without affecting other monitors.
2. On the remote control, press and hold down the REMOTE ID SET button while using the keypad to input the REMOTE CONTROL ID number (1-100). The REMOTE ID NUMBER should match the MONITOR ID number of the monitor to be controlled.
3. Point the remote control toward the remote sensor of the desired monitor and press the REMOTE ID SET button.

   The MONITOR ID number is shown in red on the monitor.

   If the REMOTE CONTROL ID is “0”, then all monitors in range will show their particular MONITOR ID number in red.

   If the MONITOR ID number is shown in white on the monitor, the MONITOR ID number and the REMOTE CONTROL ID are not the same.

Chapter 7 External Control

This Chapter Includes:

⇨ “Controlling the Monitor via RS-232C” on page 63

⇨ “Controlling the Monitor via LAN” on page 64

⇨ “Commands” on page 73

⇨ “Proof of Play” on page 74

Connecting an external device

There are two options to connect an external device to control the monitor.

- RS-232C terminal.

  Connecting an external device to the RS-232C terminal of the monitor with an RS-232C cable.

- LAN port.

  Connecting a network to the LAN port of the monitor with a LAN cable (RJ-45 category 5 or higher).

Controlling the Monitor via RS-232C

This monitor can be controlled by connecting a personal computer with an RS-232C (reverse type) terminal.

For example, some of the functions that can be controlled by a personal computer are:

- Power ON or standby.
- Switching between input signals.
- Sound Mute ON or OFF.

Connection

Monitor + computer.

- Please turn off the monitor's main power before connecting a computer to the monitor.
- Please turn on the connected computer first then turn on the monitor's main power.

  If you turn on the computer and monitor in reverse order, the com port may not work.

  To control the monitor via commands sent from a computer connected with an RS-232C cable, please use the control command. Instructions for the control command can be found in the "External_Control.pdf". See page 84.

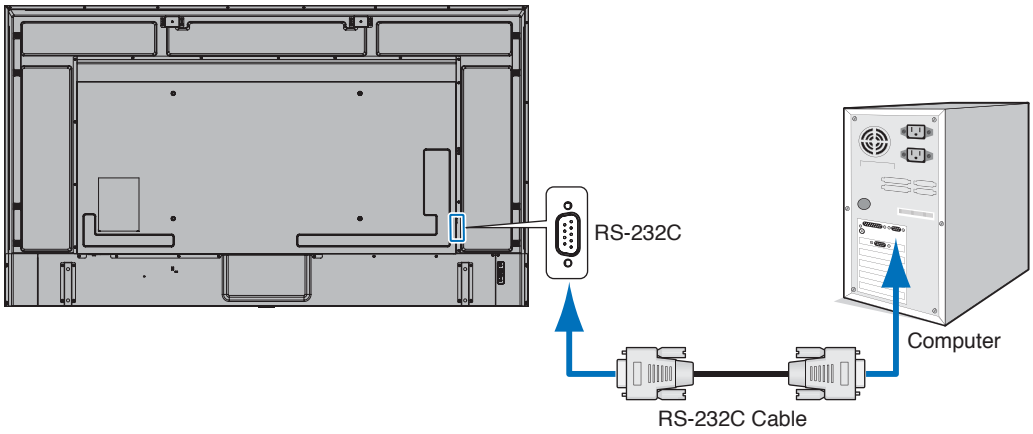

NOTE:
- If your computer is equipped only with a 25-pin serial port connector, a 25-pin serial port adapter is required. Contact your supplier for details.
- For the pin assignment, please see "RS-232C input/output" on page 64.

This monitor uses RXD, TXD and GND lines for RS-232C control.

The reverse type cable (null modem cable) (not included) should be used for RS-232C control.

PIN ASSIGNMENT

RS-232C input/output

Pin No	Name
1	NC
2	RXD
3	TXD
4	NC
5	GND
6	NC
7	NC
8	NC
9	NC

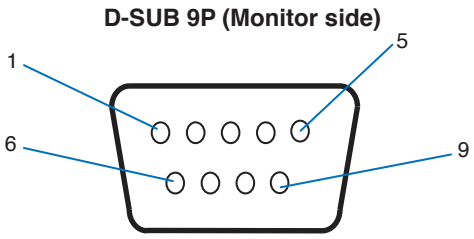

This monitor uses RXD, TXD and GND lines for RS-232C control.

Controlling the Monitor via LAN

Connecting to a Network

Using a LAN cable allows you to specify the Network Settings and the Alert Mail Settings by using an HTTP server function.

To use a LAN connection, you are required to assign an IP address. The monitor will obtain an IP address automatically when connected to a DHCP network.

Example of LAN connection:

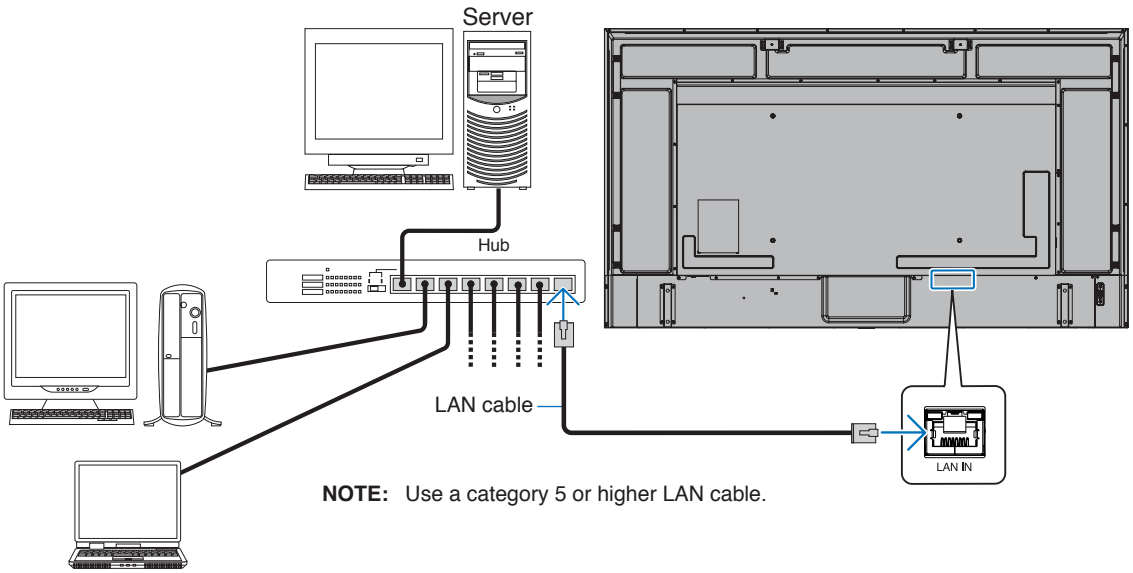

NOTE: Use a category 5 or higher LAN cable.

Multiple Monitors Connection

You can control multiple monitors by using RS-232C, REMOTE or LAN daisy-chain connection.

NOTE:
- Up to 100 monitors can be daisy chained together.
- Please execute [AUTO ID/IP SETTING] to automatically assign unique IDs to each monitor (see page 105) before trying to control a monitor by manually specifying the ID number.

  Be careful not to make a loop connection on the network. A loop connection occurs when both LAN 1 and LAN 2 on a single monitor is connected to the same network.

  NOTE: In a LAN daisy-chain, only the first monitor should be connected to the network. All other monitors should be connected to each other. There should be no cable plugged into the LAN 2 port in the last monitor of the LAN daisy-chain.

Master Monitor	
Connector	
IN	OUT
RS-232C	LAN2 (DAISY CHAIN OUT)
REMOTE	
LAN1 (DAISY CHAIN IN)	

Sub Monitors	
Connector	
IN	OUT
LAN1 (DAISY CHAIN IN)	LAN2 (DAISY CHAIN OUT)

Connection

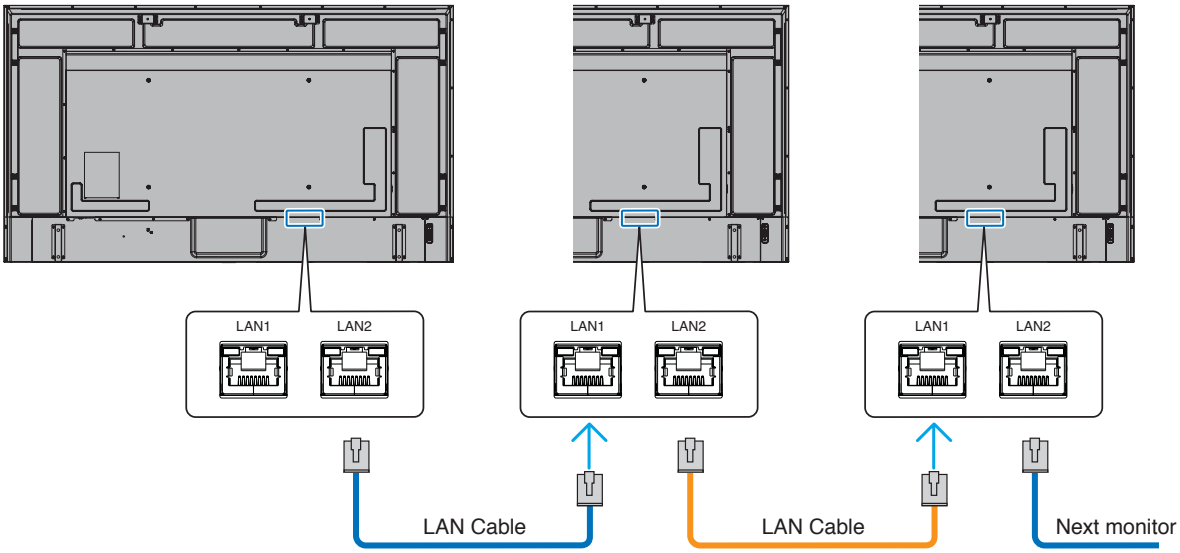

HTTP Browser

Overview

Connecting the monitor to a network allows for remote control of the monitor from a computer connected to the same network.

This device uses “JavaScript” and “Cookies” and the browser should be set to accept these functions. Refer to the help files for the web browser to change the settings to use JavaScript and Cookies.

To access the HTTP server, launch a web browser on a computer connected to the same network as the monitor and enter the following URL in the web address field:

Network Setting

http://<the Monitor’s IP address>/index.html

NOTE:
- The default IP address is assigned automatically to the monitor.
- NaViSet Administrator software for managing monitors over the network is recommended. It can be download from our website (See page 84).
- If the MONITOR NETWORK SETTINGS screen does not appear in the web browser, press the Ctrl+F5 keys to refresh your web browser (or clear the cache).
- If the monitor appears to be slow in response to commands or clicks on buttons in the browser, or the general speed of operation is unacceptable, this may be due to network traffic or the settings on your network. Should this happen, consult your network administrator.
- The monitor may not respond if the buttons shown on the browser are repeatedly pressed in rapid intervals. Should this happen, wait a moment and repeat. If you still can’t get a response, turn the monitor off and then back on.

Preparation Before Use

Operation with a browser that uses a proxy server may not be possible depending on the type of proxy server and the setting method. Although the type of proxy server will be a factor, it is possible that items that have been set will not be shown, depending on the effectiveness of the cache, and the contents set from the browser may not be reflected in operation. It is recommended that a proxy server is not used unless the network environment requires it.

Handling of the Address for Operation via a Browser

A host name can be used in the following cases (corresponding to the IP address of the monitor):

The host name must be registered in the domain name system (DNS) by the network administrator. You can then access the network settings of the monitor via this registered host name by using a compatible browser.

If the host name has been configured in the “HOSTS” file of the computer being used, you can then access the network settings of the monitor via this host name by using a compatible browser.

Example 1: When the host name of the monitor has been set to “pd.xxx.co.jp”, access is gained to the network setting by specifying http://pd.xxx.co.jp/index.html for the address or the entry column of the URL.

Example 2: When the IP address of the monitor is “192.168.73.1”, access is gained to the mail alert settings by specifying http://192.168.73.1/index.html for the address or the entry column of the URL.

Operation

Access the following address to show HOME.

http://<the Monitor's IP address>/index.html

Click each link on the left-hand column below HOME.

REMOTE CONTROL

Enable an operation to control the monitor equivalent to the keys on the remote control.

OSD Menu Settings in the Monitor Web controls

Select one of the links on the left side of the monitor web controls to configure the settings available in the monitor's OSD. Please see page 86 for the full list of OSD menu controls.

[INPUT], [PICTURE], [AUDIO], [SCHEDULE], [SLOT], [PROTECT], [SYSTEM], [NETWORK]

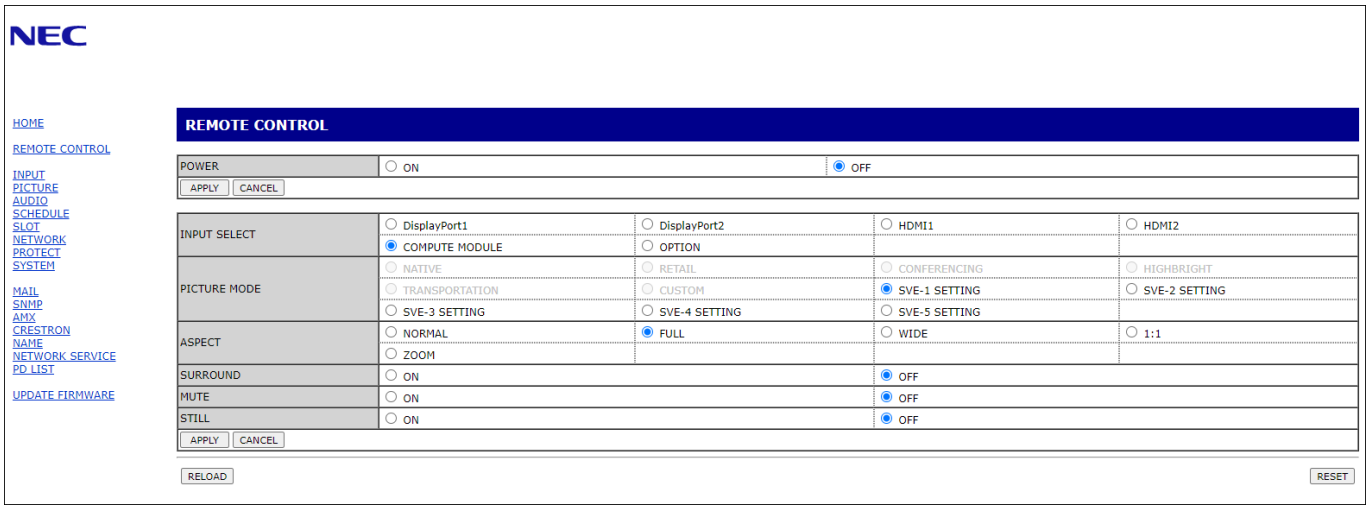

NOTE: The buttons in the monitor web controls function as follows:

[APPLY]: Saves the settings.

[CANCEL]: Returns to the previous settings.
NOTE: CANCEL is disabled after clicking APPLY.

[RELOAD]: Reloads the settings.

[RESET]: Resets to the initial settings.

Network Settings

Click on “NETWORK” on the left-hand column below HOME.

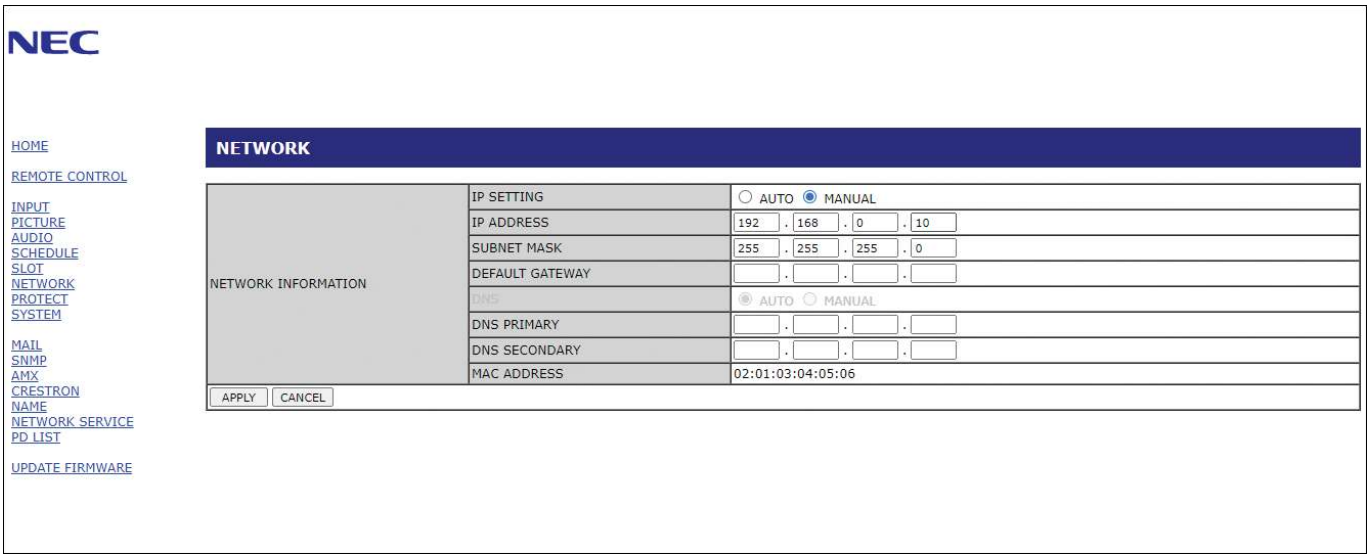

IP SETTING	Select an option for setting the IP ADDRESS. AUTO: Automatically assign an IP address. MANUAL: Manually set an IP address for the monitor connected to the network. NOTE: Consult your network administrator if you have any trouble.
IP ADDRESS	Set your IP address for the monitor connected to the network when [MANUAL] is selected for [IP SETTING].
SUBNET MASK	Set your subnet mask data for the monitor connected to the network when [MANUAL] is selected for [IP SETTING].
DEFAULT GATEWAY	Set your default gateway for the monitor connected to the network when [MANUAL] is selected for [IP SETTING]. NOTE: Set as [0.0.0.0] to delete the setting.
DNS	Set for IP ADDRESS setting of DNS server. AUTO: The DNS server connected to the monitor will automatically assign its IP address. MANUAL: Manually enter the IP address of the DNS server that is connected to the monitor.
PRIMARY DNS	Enter the primary DNS server settings of the network connected to the monitor. NOTE: Enter [0.0.0.0] to delete the setting.
SECONDARY DNS	Enter the secondary DNS server settings of the network connected to the monitor. NOTE: Enter [0.0.0.0] to delete the setting.

Mail Setting

Click on “MAIL” on the left-hand column below HOME.

When the Mail settings are configured and enabled, the monitor sends email notifications when an error occurs or if the input signal is lost. The monitor must be connected to a LAN for this feature to work.

Alert Mail	When an error occurs, the monitor will send an error message to the email address(es) listed in the Recipient’s Address fields. Please see the “Alert error list” table below. Note that it is not an error when no input signal is detected. The monitor will only send a no signal input notification email when Status Message is enabled. Selecting [ENABLE] turns on the Alert Mail feature. Selecting [DISABLE] turns off the Alert Mail feature.
Status Message	This is a setting for whether to include the 'no signal' condition as an alerting condition or not. Selecting [ENABLE], Alert Mail send mails when the monitor has no signal or is in alerting conditions. Selecting [DISABLE], Alert Mail send mails when the monitor is in alerting conditions. It doesn’t send mail when the monitor has no signal.
Sender’s Address	Type in the sender’s address. Up to 60 alphanumeric and symbols characters can be used.
SMTP Server	Type in the SMTP server name to be connected with the monitor. Up to 60 alphanumeric characters can be used.
Recipient’s Address 1 to 3	Type in your recipient’s address. Up to 60 alphanumeric and symbols characters can be used.
Authentication Method	This selects the authentication method of the email transmission.
POP3 Server	This specifies the address of the POP3 server that is used in the authentication of the email.
User Name	This sets the user name for logging into the authentication server when authentication is required for the email transmission. Up to 60 alphanumeric characters can be used.
Password	This sets the password for logging into the authentication server when authentication is required for the email transmission. Up to 60 alphanumeric characters can be used.
Test Mail	Click on this button to send a test email to check if your settings are correct.

NOTE:
- If an alert email isn’t received when performing a Test Mail, check that the network and server settings, and the recipient’s email address are correct.
- If you entered an incorrect address in a test, you may not receive an alert email.
  Should this happen, check that the Recipient’s Address is correct.

Alert error list

Error number * ErrorCode	Alert mail Message	Explanation	Measure
70h ~ 7Fh	The monitor’s power supply is not functioning normally.	Standby power abnormal.	Please contact your supplier.
80h ~ 8Fh	The cooling fan has stopped.	Cooling fan abnormal.	Please contact your supplier.
90h ~ 9Fh	The monitor’s backlight unit is not functioning normally.	Backlight abnormal.	Please contact your supplier.
A0h ~ AFh	The monitor is overheated.	Temperature abnormal.	Please contact your supplier.
B0h ~ BFh	The monitor does not receive an input signal.	No signal.	Please check “No picture” in “Troubleshooting”.
D0h	The remaining capacity of the error log decreased.	The Proof of Play log memory size is 1 more hour.	Please get a log by using PD external command. See page 74.
D1h	The battery for clocks is empty.	The battery is empty.	Please connect the monitor to the power then recharge the battery. Please set (DATE & TIME) in OSD.
E0h ~ EFh	A system error occurred in the monitor.	System error.	Please contact your supplier.

SNMP Settings

Click on “SNMP” on the left-hand column below HOME.

The SNMP protocol is used to get status information and to control a monitor directly via the network.

Version:

SNMP v1 Authenticated plain text by community name, does not return a confirmation message of the trap.

SNMP v2c Authenticated plain text by community name, returns a confirmation message of the trap.

Community name:

The default setting of community name is “public”. It is read-only. You can set community names for up to 3 settings.

Trap:

Sending error message to a specified address when an error occurs in the monitor.

Check Box	Explanation	Error code
Temperature	Temperature abnormal	0xA0, 0xA1, 0xA2
Fan	Cooling fan abnormal	0x80, 0x81
Power	Power abnormal	0x70, 0x71, 0x72, 0x78
Inverter/Backlight	Inverter or backlight abnormal	0x90, 0x91
No Signal	No signal	0xB0
PROOF OF PLAY	Lower the log storage	0xD0
System Error	System error	0xE0

AMX Settings

Click on “AMX” on the left-hand column below HOME.

AMX BEACON	To turn on or off for the detection from AMX Device Discovery when connecting to a network supported by an AMX’s NetLinx control system. HINT: When using a device that supports AMX Device Discovery, all AMX NetLinx control systems will recognize the device and download the appropriate Device Discovery Module from an AMX server. Selecting [ENABLE] AMX Device Discovery will detect the device. Selecting [DISABLE] AMX Device Discovery will not detect the device.

CRESTRON Settings

Click on “CRESTRON” on the left column below HOME.

CRESTRON ROOMVIEW compatibility

The monitor supports CRESTRON ROOMVIEW, allowing multiple devices connected in the network to be managed and controlled from a computer or a controller.

For further information, visit http://www.crestron.com

ROOMVIEW	ROOMVIEW for managing from the computer. ON: Enables ROOMVIEW. OFF: Disables ROOMVIEW.
CRESTRON CONTROL	CRESTRON CONTROL for managing from the controller. ON: Enables CRESTRON CONTROL. OFF: Disables CRESTRON CONTROL.
CONTROLLER IP ADDRESS	Sets the IP address of the CRESTRON SERVER.
IP ID	Sets your CRESTRON SERVER IP ID.

HINT: The CRESTRON settings are required only for use with CRESTRON ROOMVIEW.
For further information, visit http://www.crestron.com

Name Settings

Click on “NAME” on the left-hand column below HOME.

MONITOR NAME	Allows you to customize the monitor’s name, up to a maximum of 16 characters long. This name is shown when searching for devices on the network when using an application such as NaViSet Administrator. Giving the monitor a unique name allows it to be easily identified when viewing a list of monitors on the network. The default name is the monitor’s model name.
HOST NAME	Type in the hostname of the network to the monitor. Up to 15 alphanumeric characters can be used.
DOMAIN NAME	Type in the domain name of the network which is connected with the monitor. Up to 60 alphanumeric characters can be used.

Network Service Settings

Click on “NETWORK SERVICE” on the left-hand column below HOME.

PJLink CLASS	Set a class for PJLink*. NOTE: PJLink is a network interface standard that JBMIA established. http://pjlink.jbmia.or.jp/index.html This monitor is available for class1 and class2 command.
NOTIFY FUNCTION ENABLE	Enable or disable a notification of the monitor network condition. This function is only for class2.
NOTIFY ADDRESS	Set an IP ADDRESS to which the monitor network status will be sent. This function is only for class2.
PJLink PASSWORD	Set a password for PJLink*. The password must be max. 32 characters long. Do not forget your password. If you forget your password, consult your supplier.
HTTP PASSWORD	Set a password for the HTTP server. The password must be max. 32 characters long.
HTTP PASSWORD ENABLE	An HTTP PASSWORD is required when logging into the HTTP server. Set the monitor name as the USER NAME when entering the password.

*What is PJLink?

PJLink is a standardization of protocol used for controlling devices of different manufacturers. This standard protocol was established by Japan Business Machine and Information System Industries Association (JBMIA) in 2005.

The device supports all commands of PJLink.

PD LIST Information

Click on “PD LIST” on the left column below HOME.

Shows a list of monitor IDs and IP addresses of multiple monitors which are daisy-chained.

NOTE: Only the master monitor can show the list.

Commands

Connecting the monitor with RS-232C or connecting to a network via LAN, the control commands transmit and receive between the monitor and a connected device. It allows for remote control of the monitor from a connected device.
Instructions for the both control command can be found in the external documents “External_Control.pdf” (See page 84).

RS-232C Interface

PROTOCOL	RS-232C
BAUD RATE	9600 [bps]
DATA LENGTH	8 [bits]
PARITY	NONE
STOP BIT	1 [bit]
FLOW CONTROL	NONE

LAN Interface

PROTOCOL	TCP
PORT NUMBER	7142
COMMUNICATION SPEED	AUTO setting (10/100Mbps)

ASCII Control command

This monitor supports control command, which is listed in the “External_Control.pdf” (See page 84), but also supports common ASCII control command, which is used for controlling the NEC monitor or projector from a connected computer.
For further information please visit our website.

Parameter

Input command

Input signal name	Response	Parameter
HDMI1	hdmi1	hdmi1 or hdmi
HDMI2	hdmi2	hdmi2
DisplayPort1	DisplayPort1	DisplayPort1
DisplayPort2	DisplayPort2	DisplayPort2
OPTION*	option	option
COMPUTE MODULE*	compute_module	compute_module

Status command

Response	Error status
error:temp	Temperature abnormal
error:fan	Cooling fan abnormal
error:light	Inverter or backlight abnormal
error:system	System error

*1: This function depends on which Option Board is installed in the monitor.
*2: This input is available when the optional Raspberry Pi Compute Module Interface Board and Raspberry Pi Compute Module are installed.

Proof of Play

This function allows sending of messages for the current status of the monitor by self-diagnosis.

For the Proof of Play function including self-diagnosis, please see the “External_Control.pdf”. See page 84.

Check item		Message
①	INPUT	DisplayPort1/DisplayPort2/HDMI1/HDMI2/OPTION*/COMPUTE MODULE*1
②	Resolution	e.g. (H)1920, (V)1080, (H)3840, (V)2160 or No signal or Invalid signal
③	Audio signal	Audio in or No Audio in or N/A
④	Picture Image	Normal Picture or No Picture
⑤	AUDIO OUT	Normal Audio or No Audio
⑥	TIME	(year)/(month)/(day)/(hour)/(minutes)/(second)
⑦	EXPANSION DATA	00h: Normal Proof of Play event 01h: Proof of Play event is “last power on time” 20h: Contents Copy from USB 21h: Contents Copy form network folder 30h: Contents Copy Success 31h: Contents Copy Error (No media) 32h: Contents Copy Error (Connect error) 33h: Contents Copy Error (Out of disk space) 34h: Contents Copy Error (Read/Write error) 40h: Human detected (Human sensor Status) 41h: Human detect cleared (Human Sensor Status)

*: This function depends on which Option Board is installed in the monitor.

*1: This input is available when the optional Raspberry Pi Compute Module Interface Board and Raspberry Pi Compute Module are installed.

Example:

① HDMI1
② 3840 x 2160
③ Audio in
④ Normal Picture
⑤ Normal Audio
⑥ 2020/1/1/0h/0m/0s
⑦ 30h: Contents Copy Success

Chapter 8 Troubleshooting

This Chapter Includes:

⇨ “Screen Image and Video Signal Issues” on page 76

⇨ “Hardware Issues” on page 77

Screen Image and Video Signal Issues

No picture

- The signal cable should be completely connected to the display card/computer.
- The display card should be completely seated in its slot.
- Check the main Power Switch, it should be in the ON position.
- Make sure both the computer and monitor are powered on.
- Make sure that a supported resolution has been selected on the display card or system being used. If in doubt, please refer to the user's manual of the display controller or system to change the resolution.
- Check the monitor and your display card with respect to compatibility and recommended signal timings.
- Check the signal cable connector for bent or pushed-in pins.
- The monitor automatically goes into standby at the preset time period after the video signal is lost. Press the power on button on the remote control or press the ⏻ button on the monitor.
- If you unplug the signal cable when starting the computer, images may not be shown. Turn off the monitor and the computer and then connect the signal cable and turn on the computer and the monitor.
- Check the [OPTION POWER] setting when you use Option Board accessories.
- Check for HDCP (High-bandwidth Digital Content Protection) content. HDCP is a system for preventing illegal copying of video data sent over a digital signal. If you are unable to view material via the digital inputs, this does not necessarily mean that the monitor is not functioning properly. With the implementation of HDCP, there may be cases in which certain content is protected by HDCP and might not be shown due to the decision/intention of the HDCP community (Digital Content Protection, LLC).

Image persistence

- Please be aware that LCD Technology may experience a phenomenon known as image persistence. Image persistence occurs when a residual or "ghost" image of a previous image remains visible on the screen. Unlike CRT monitors, the image persistence of monitors is not permanent, but a single still image being shown for a long period of time should be avoided. To alleviate image persistence, put the monitor into standby via remote control or turn the monitor's main power off for as long as the previous image was shown. For example, if an image was on the monitor for one hour and a residual image remains, the monitor should be in standby or turned off for one hour to erase the image.

NOTE: As with all personal display devices, we recommend showing moving images, using a moving screen saver, or changing still images at regular intervals whenever the screen is idle, or putting the monitor into standby or turning it off when not in use.

The image is blinking

- If you use a signal repeater or distributor or a long cable, this may cause image roughness or blink for a moment. In this case please connect the cable to the monitor directly without using a repeater or a distributor, or replace the cable with a higher quality cable. Using a twisted pair extender may cause image roughness depending on the environment where the monitor is in or the cable you are using. For further information please ask your supplier.
- Some HDMI cables may not show a correct image. If input resolution is 1920 x 2160, 3840 x 2160 or 4096 x 2160, please use an HDMI cable which is approved to support 4K resolution.
- When inputting 8K signals, use a DisplayPort cable with the 8K logo.

The image is unstable, unfocused or swimming is apparent

- The signal cable should be completely attached to the computer.
- Please adjust settings in the [PICTURE MODE] menu by checking the image on the screen.
- When the display mode is changed, the OSD Image Adjust settings may need to be re-adjusted.
- Check the monitor and your display card with respect to compatibility and recommended signal timings.
- If text looks garbled, change the video mode to non-interlaced and use a 60 Hz refresh rate.
- The image may be distorted when turning the power on or changing the settings.

The image is not properly reproduced

- Use the OSD Image Adjust controls to increase or decrease the coarse adjustment.
- Make sure that a supported resolution has been selected on the display card or system being used.
- If in doubt, please refer to the user's manual of the display card or system to change the resolution.

Selected resolution is not displayed properly

- Check the Information OSD to verify the appropriate resolution has been selected.
- If the resolution you set is over or under a range, an "OUT of RANGE" window will appear in order to warn you. Please set supported resolution at the connected computer.

Video contrast is either too high or too low

- Check that the correct option for the VIDEO RANGE is selected for the input signal.
  - **Blacks are crushed and whites are clipped** - change the VIDEO RANGE to FULL.
    Crushing blacks and clipping whites can occur when the monitor's VIDEO RANGE is set to LIMITED while the source video signal's color levels are RGB Full (RGB 0-255), causing lost details in the shadows and highlights and the image appears overly high in contrast.
  - **Blacks are dark gray and whites are dull** - change the VIDEO RANGE to LIMITED.
    Dulling blacks and whites can occur when the VIDEO RANGE is set to FULL while the source video signal's color levels are RGB Limited (RGB 16-235), which effectively appears to prevent the monitor from obtaining its full brightness range and the image appears to be lacking in contrast.

Either light vertical or horizontal stripes may appear, depending on the specific image pattern. This is not a product fault or degradation.

Hardware Issues

⏻ button does not respond

- Unplug the power cord of the monitor from the AC outlet to turn off and reset the monitor.
- Check the main power switch on the monitor.

No sound

- Check to see if the audio cable is properly connected.
- Check to see if [MUTE] is activated. Use the remote control to enable or disable the mute function.
- Check to see if [VOLUME] is set to a minimum.
- Check to see if the computer supports an audio signal through DisplayPort.

  If unsure, contact your supplier.
- If HDMI CEC audio device is not connected, please set [AUDIO RECEIVER] to [DISABLE].
- Check the [SPEAKER SELECT] setting. If the speaker setting is changed, the monitor must be powered off and on. After changing the speaker setting, close the OSD menu and power cycle the monitor using the main power switch.

The remote control is not functioning

- The batteries may be drained. Please change the batteries, then check if the remote control works.
- Check that the batteries are inserted correctly.
- Check that the remote control is pointing at the remote control sensor of the monitor.
- Check the status of [LOCK SETTINGS].
- The remote control system may not function when direct sunlight or strong illumination strikes the remote control sensor of the monitor, or when there is an object in the path.

The SCHEDULE/OFF TIMER function is not working properly

- The [SCHEDULE] function will be disabled when the [OFF TIMER] is set.
- If the [OFF TIMER] function is enabled and the power to the monitor is turned off when the power supply is interrupted unexpectedly, then the [OFF TIMER] will be reset.

Snowy picture, poor sound in TV

- Check antenna/cable connection. Use new cable if necessary.

The USB Hub does not operate

- Check to make sure that the USB cable is properly connected. Refer to your USB device user's manual.
- Check that the USB upstream port on the monitor is connected to the USB downstream port on the computer. Please make sure the computer is [ON] or [USB POWER] is [ON].

Interference in TV

- Check components for shielding, move away from monitor if necessary.

USB or RS-232C or LAN control is not available

- Check RS-232C (reverse type) or the LAN cable. A category 5 or higher LAN cable is required for connection.
- Check USB cable connected to USB-B port. Check the [EXTERNAL CONTROL] is set to [ENABLE] then [PC SOURCE] is set to [EXTERNAL PC].

The monitor goes into standby automatically

- Please check [OFF TIMER] setting.
- Set the [CEC] function to [OFF]. The monitor may go into standby mode when a connected HDMI-CEC supported device goes into standby.
- Please check [POWER] in the [SCHEDULE INFORMATION].

Power Indicator Patterns

LED on the monitor is not lit (no blue or red color can be seen) (see page 36)

- Make sure the power cord is properly connected to the monitor and the wall, and make sure the monitor's main power switch is ON.
- Make certain the computer is not in a power-saving mode (touch the keyboard or move the mouse).
- Check that the [POWER INDICATOR] is set to [ON] in the [CONTROL] settings of the OSD menu.

LED colors, except for blue, are blinking or glowing

- A certain failure might have occurred, please contact your supplier.
- If the monitor is powered off due to the internal temperature being higher than the normal operating temperature, the LED will blink green or amber or red six times. Please leave the monitor to cool down for a few minutes then turn it on again.
- The monitor could be in standby.

  Press the power on button on the remote control or press the ⏻ button on the monitor.

Chapter 9 Specifications

This Chapter Includes:

- ⇨ “Compatible signal list” on page 80
- ⇨ “M751” on page 81
- ⇨ “M861” on page 82

Compatible signal list

Signal name	Resolution	Scanning frequency		HDMI		DisplayPort	Remarks
		Horizontal	Vertical	MODE1	MODE2		
VGA	640 x 480	31.5 kHz	60 Hz	Yes	Yes	Yes	
SVGA	800 x 600	37.9 kHz	60 Hz	Yes	Yes	Yes	
XGA	1024 x 768	48.4 kHz	60 Hz	Yes	Yes	Yes	
HD	1280 x 720	45.0 kHz	60 Hz	Yes	Yes	Yes	
WXGA	1280 x 800	49.7 kHz	60 Hz	Yes	Yes	Yes	
SXGA	1280 x 1024	64 kHz	60 Hz	Yes	Yes	Yes	
WXGA	1360 x 768	47.7 kHz	60 Hz	Yes	No	Yes	
	1366 x 768	47.7 kHz	60 Hz	Yes	Yes	Yes	
SXGA+	1400 x 1050	65.3 kHz	60 Hz	Yes	Yes	Yes	
WXGA+	1440 x 900	55.9 kHz	60 Hz	Yes	Yes	Yes	
UXGA	1600 x 1200	75.0 kHz	60 Hz	Yes	Yes	Yes	
WSXGA+	1680 x 1050	65.3 kHz	60 Hz	Yes	Yes	Yes	
Full HD	1920 x 1080	67.5 kHz	60 Hz	Yes	Yes	Yes	
WUXGA	1920 x 1200	74.6 kHz	60 Hz	Yes	Yes	Yes	
4K/2	1920 x 2160	133.3 kHz	60 Hz	Yes	Yes	Yes	
4K	3840 x 2160	54.0 kHz	24 Hz	Yes	Yes	No	
	3840 x 2160	52.4 kHz	24 Hz	No	No	Yes*3	
	3840 x 2160	56.3 kHz	25 Hz	Yes	Yes	No	
	3840 x 2160	65.7 kHz	30 Hz	No	No	Yes	
	3840 x 2160	67.5 kHz	30 Hz	Yes	Yes	No	
	3840 x 2160	112.5 kHz	50 Hz	No	Yes	No	
	3840 x 2160	133.3 kHz	60 Hz	No	No	Yes*	Recommended signal timing
	3840 x 2160	135.0 kHz	60 Hz	No	Yes	No	Recommended signal timing
	4096 x 2160	52.4 kHz	24 Hz	No	No	Yes*3	Compressed image
	4096 x 2160	54.0 kHz	24 Hz	Yes	Yes	No	Compressed image
	4096 x 2160	56.3 kHz	25 Hz	No	Yes	No	Compressed image
	4096 x 2160	65.7 kHz	30 Hz	No	No	Yes	Compressed image
	4096 x 2160	67.5 kHz	30 Hz	No	Yes	No	Compressed image
	4096 x 2160	112.5 kHz	50 Hz	No	Yes	No	Compressed image
	4096 x 2160	133.3 kHz	60 Hz	No	No	Yes*	Compressed image
	4096 x 2160	135.0 kHz	60 Hz	No	Yes	No	Compressed image
8K	7680 x 4320*4	131.4 kHz	30 Hz	No	No	Yes*1, *2	Compressed image
	7680 x 4320*5	132.0 kHz	30 Hz	No	No	Yes*1, *2	Compressed image
	7680 x 4320*5	264.0 kHz	60 Hz	No	No	Yes*1, *2	Compressed image
HDTV (1080p)	1920 x 1080	27.0 kHz	24 Hz	Yes	Yes	Yes	
	1920 x 1080	28.1 kHz	25 Hz	Yes	Yes	Yes	
	1920 x 1080	33.8 kHz	30 Hz	Yes	Yes	Yes	
	1920 x 1080	56.3 kHz	50 Hz	Yes	Yes	Yes	
	1920 x 1080	67.5 kHz	60 Hz	Yes	Yes	Yes	
HDTV (1080i)	1920 x 1080 (Interlaced)	28.1 kHz	50 Hz	Yes	Yes	No	
	1920 x 1080 (Interlaced)	33.8 kHz	60 Hz	Yes	Yes	No	
HDTV (720p)	1280 x 720	37.5 kHz	50 Hz	Yes	Yes	Yes	
	1280 x 720	45.0 kHz	60 Hz	Yes	Yes	Yes	
SDTV (576p)	720 x 576	31.3 kHz	50 Hz	Yes	Yes	Yes	
SDTV (480p)	720 x 480	31.5 kHz	60 Hz	Yes	Yes	Yes	
SDTV (576i)	720 x 576 (Interlaced)	15.6 kHz	50 Hz	Yes	Yes	No	
SDTV (480i)	720 x 480 (Interlaced)	15.7 kHz	60 Hz	Yes	Yes	No	

*: Only DP version 1.2 or 1.4 is set.
*1: DisplayPort1 only.
*2: Only DP version 1.4 is set.
*3: Only DP version 1.1a is set.
*4: Only DSC = DISABLE is set.
*5: Only DSC = ENABLE is set.

NOTE:
- Depending on the input signal's resolution, characters may look blurred or figures may be distorted.
- Depending on the video card or driver used, the image may not be shown correctly.

M751

Product Specifications

LCD Module			75”/189.27 cm diagonal Pixel Pitch: 0.430 mm Resolution: 3840 x 2160 Color: Over 1073 million colors (depending on display card used) Brightness*6: 500 cd/m² (max.) Contrast Ratio: 1200:1 Viewing Angle: 89° (typ) @ CR>10
Frequency			Horizontal: 15 - 135 kHz (HDMI)/22 - 264 kHz (DisplayPort1)/22 - 134 kHz (DisplayPort2) Vertical: 23 - 76 Hz
Pixel Clock			25 - 600 MHz (HDMI) 25 - 2380 MHz (DisplayPort1) 25 - 570 MHz (DisplayPort2)
Viewable Size			1649.66 x 927.94 mm
Input/Output Signal			
	DisplayPort	DisplayPort Connector	Digital RGB	DisplayPort (Up to 7680 x 4320 (60 Hz)*1, HDCP 1.3/2.2)
	HDMI	HDMI Connector	Digital YUV Digital RGB	HDMI (Up to 4096 x 2160 (60 Hz)*1, HDCP 1.4/2.2)
Audio terminal			
	AUDIO Input	DisplayPort Connector	Digital Audio	PCM 32, 44.1, 48 kHz (16/20/24 bit)
		HDMI Connector	Digital Audio	PCM 32, 44.1, 48 kHz (16/20/24 bit)
	AUDIO Output	Stereo Mini Jack	Analog Audio	Stereo L/R 0.5 Vrms
		HDMI Connector (ARC*2)	Digital Audio	PCM 32, 44.1, 48 kHz (16/20/24 bit)
Speaker Output				External Speaker Jack 15 W + 15 W (8 ohm) Internal Speaker 10 W + 10 W (Stereo)
Control			RS-232C In: 9 Pin D-sub LAN: RJ-45 10 BASE-T/100 BASE-TX x 2 Remote IN: Stereo Mini Jack 3.5 mm Ø
USB	USB-A		USB 2.0 Downstream port, DC 5 V/500 mA (max.)
	USB-B		USB 2.0 Upstream port
	SERVICE		Power supply port, DC 5 V/2 A (max.) Firmware update port
Power Supply			4.9 - 2.0 A @ AC 100 - 240 V 50/60 Hz
Power Consumption			Normal Operation*5: Approx. 205 W Energy Saving Mode*5 (LED glowing amber): 2 W or less Energy Saving Mode*5 (LED blinking amber): 0.5 W or less
Operational Environment			Temperature*3: 0 - 40 °C / 32 - 104 °F Humidity: 20 - 80 % (without condensation) Altitude: 3000 m or less (Brightness may decrease with altitude)
Storage Environment			Temperature: –20 - 60 °C / –4 - 140 °F Humidity: 10 - 80 % (without condensation) / 90 % - 3.5 % x (Temp - 40 °C) regarding over 40 °C
Dimension*4			1682.3 (W) x 961.1 (H) x 88.4 (D) mm/66.23 (W) x 37.84 (H) x 3.48 (D) inches (with handle) 1682.3 (W) x 961.1 (H) x 83.2 (D) mm/66.23 (W) x 37.84 (H) x 3.28 (D) inches (without handle)
Weight			Approx. 38.2 kg (84.2 lbs)
Tilt Angle			±15°
Mounting interface			600 mm x 400 mm (M8, 4 Holes)
Power supply for Option Board			12 V/5.5 A (max.)
Power supply for Raspberry Pi Compute Module			12 V/1.67 A (max.)
Power supply for Option Board and Raspberry Pi Compute Module			12 V/5.5 A (max.)

NOTE: Technical specifications are subject to change without notice.

*1: Compressed image.
*2: HDMI IN1 only.
*3: When you use Option Board accessories, please contact your supplier for detailed information.
*4: Measurements are of the monitor only and do not include removable parts that protrude.
*5: Without any option, with factory settings.
*6: The Brightness level changes depending on the input settings, picture settings, installation environment, and individual product characteristics.
The overall Brightness decreases as the product ages due to deterioration over time. It does not maintain a permanent brightness level throughout the product’s life.

M861

Product Specifications

LCD Module			86”/217.43 cm diagonal Pixel Pitch: 0.494 mm Resolution: 3840 x 2160 Color: Over 1073 million colors (depending on display card used) Brightness*6: 500 cd/m² (max.) Contrast Ratio: 1200:1 Viewing Angle: 89° (typ) @ CR>10
Frequency			Horizontal: 15 - 135 kHz (HDMI)/22 - 264 kHz (DisplayPort1)/22 - 134 kHz (DisplayPort2) Vertical: 23 - 76 Hz
Pixel Clock			25 - 600 MHz (HDMI) 25 - 2380 MHz (DisplayPort1) 25 - 570 MHz (DisplayPort2)
Viewable Size			1895.04 x 1065.96 mm
Input/Output Signal			
DisplayPort	DisplayPort Connector	Digital RGB	DisplayPort (Up to 7680 x 4320 (60 Hz)*1, HDCP 1.3/2.2)
HDMI	HDMI Connector	Digital YUV Digital RGB	HDMI (Up to 4096 x 2160 (60 Hz)*1, HDCP 1.4/2.2)
Audio terminal			
AUDIO Input	DisplayPort Connector	Digital Audio	PCM 32, 44.1, 48 kHz (16/20/24 bit)
	HDMI Connector	Digital Audio	PCM 32, 44.1, 48 kHz (16/20/24 bit)
AUDIO Output	Stereo Mini Jack	Analog Audio	Stereo L/R 0.5 Vrms
	HDMI Connector (ARC*2)	Digital Audio	PCM 32, 44.1, 48 kHz (16/20/24 bit)
Speaker Output			External Speaker Jack 15 W + 15 W (8 ohm) Internal Speaker 10 W + 10 W (Stereo)
Control			RS-232C In: 9 Pin D-sub LAN: RJ-45 10 BASE-T/100 BASE-TX x 2 Remote IN: Stereo Mini Jack 3.5 mm Ø
USB	USB-A		USB 2.0 Downstream port, DC 5 V/500 mA (max.)
	USB-B		USB 2.0 Upstream port
	SERVICE		Power supply port, DC 5 V/2 A (max.) Firmware update port
Power Supply			6.6 - 2.6 A @ AC 100 - 240 V 50/60 Hz
Power Consumption			Normal Operation*5: Approx. 320 W Energy Saving Mode*5 (LED glowing amber): 2 W or less Energy Saving Mode*5 (LED blinking amber): 0.5 W or less
Operational Environment			Temperature*3: 0 - 40 °C / 32 - 104 °F Humidity: 20 - 80 % (without condensation) Altitude: 3000 m or less (Brightness may decrease with altitude)
Storage Environment			Temperature: –20 - 60 °C / –4 - 140 °F Humidity: 10 - 80 % (without condensation) / 90 % - 3.5 % x (Temp - 40 °C) regarding over 40 °C
Dimension*4			1927.6 (W) x 1099.1 (H) x 88.4 (D) mm/75.89 (W) x 43.27 (H) x 3.48 (D) inches (with handle) 1927.6 (W) x 1099.1 (H) x 83.2 (D) mm/75.89 (W) x 43.27 (H) x 3.28 (D) inches (without handle)
Weight			Approx. 47.9 kg (105.6 lbs)
Tilt Angle			±15°
Mounting interface			600 mm x 400 mm (M8, 4 Holes)
Power supply for Option Board			12 V/5.5 A (max.)
Power supply for Raspberry Pi Compute Module			12 V/1.67 A (max.)
Power supply for Option Board and Raspberry Pi Compute Module			12 V/5.5 A (max.)

NOTE: Technical specifications are subject to change without notice.

*1: Compressed image.
*2: HDMI IN1 only.
*3: When you use Option Board accessories, please contact your supplier for detailed information.
*4: Measurements are of the monitor only and do not include removable parts that protrude.
*5: Without any option, with factory settings.
*6: The Brightness level changes depending on the input settings, picture settings, installation environment, and individual product characteristics.
The overall Brightness decreases as the product ages due to deterioration over time. It does not maintain a permanent brightness level throughout the product’s life.

Appendix A Trademark and Software License

Trademarks

Microsoft® and Windows® are either registered trademarks or trademarks of Microsoft Corporation in the United States and/or other countries.

NEC is a registered trademark of NEC Corporation.

DisplayPort™ and the DisplayPort™ logo are trademarks owned by the Video Electronics Standards Association (VESA®) in the United States and other countries.

Adobe and the Adobe logo are either registered trademarks or trademarks of Adobe Systems Incorporated in the United States and/or other countries.

MultiSync is a trademark or registered trademark of Sharp NEC Display Solutions, Ltd. in Japan and other countries.

The terms HDMI, HDMI High-Definition Multimedia Interface, HDMI Trade Dress and the HDMI Logos are trademarks or registered trademarks of HDMI Licensing Administrator, Inc.

PJLink trademark and logo are trademarks applied for registration or are already registered in Japan, the United States of America and other countries and areas.

Blu-ray is a trademark of Blu-ray Disc Association.

CRESTRON and CRESTRON ROOMVIEW are trademarks or registered trademarks of Crestron Electronics, Inc. in the United States and other countries.

TILE COMP, MDSVSENSOR, MultiProfiler and TILE MATRIX are trademarks or registered trademarks of Sharp NEC Display Solutions, Ltd. in Japan and other countries.

NaViSet is a trademark or registered trademark of Sharp NEC Display Solutions, Ltd. in Japan and other countries.

Intel and the Intel logo are trademarks of Intel Corporation or its subsidiaries.

All other brands and product names are trademarks or registered trademarks of their respective owners.

Appendix B External Resources

Additional specification documents and accessories, and optional software applications referenced in this product manual are listed below.

Regional websites

Global: https://www.sharp-nec-displays.com/global/

North America: https://www.sharpnecdisplays.us/

Europe, Russia, Middle East and Africa: https://www.sharpnecdisplays.eu/p/hq/en/home.xhtml

Japan: https://www.sharp-nec-displays.com/jp/

Additional Documentation

“External Control” PDF document

This document defines the communications protocol for externally controlling and querying the monitor via either RS-232C or LAN. The protocol uses encoded binary and requires calculation of checksums, and most functionality in the monitor can be controlled using these commands. A simpler protocol is also available for less demanding applications (see below).

This document is available for download from our website in your region.

A Python programming language based SDK (Software Development Kit) is also available that encapsulates this communications protocol into a Python library for rapid development.

https://github.com/SharpNECDisplaySolutions/necpdsdk

“Projector/Monitor Common ASCII Control Command - Reference Manual” PDF document

This document defines the communications protocol for externally controlling the basic functions of the monitor via LAN using a simple English-like syntax. It is suitable for easy integration into existing control systems. Functionality such as controlling and querying the power state, video inputs, volume, and status is available. The protocol uses ASCII encoding and doesn’t require calculation of checksums.

This document is available for download from our website in your region.

“Raspberry Pi Compute Module - Setup Guide” PDF document

Raspberry Pi

This document describes the features, installation, connectivity, and configuration of the Raspberry Pi Compute Module, which is an optional component available for this model. The required DS1-IF20CE Compute Module Interface Board and Raspberry Pi Compute Module are available separately. Please contact an authorized NEC dealer or visit our website in your region for purchase information and availability.

This document can be downloaded from:

https://www.sharp-nec-displays.com/dl/en/manual/raspberrypi/

Software

Software is available for download on our website.

https://www.sharp-nec-displays.com/dl/en/dp_soft/lineup.html

MultiProfiler Software

This free software provides complete control of the SpectraView Engine color settings in an easy-to-use application available for Microsoft Windows and macOS. The software can be used to emulate different color-spaces, perform printer output emulations using ICC Profiles and create 3D Look-Up Tables within the monitor. It requires a USB connection to the monitor.

The latest version of the MultiProfiler software is available on our website.

Display Wall Calibrator software

This software provides advanced video wall configuration and accurate color matching by calibrating the monitors using an external color sensor. It is useful when setting up multi-monitor installations - such as a video wall - to achieve the best possible brightness and color matching between screens and configuring settings applicable to the video wall. The software, available for Microsoft Windows and macOS, is available for purchase and may require the use of a supported external color sensor. Please contact an authorized dealer or see our website in your region for purchase information and availability.

NaViSet Administrator software

This free software is an advanced and powerful network based control, monitoring and asset management system for NEC monitors and projectors. The software is available for Microsoft Windows and macOS.

The latest version of the NaViSet Administrator software is available on our website.

Hardware

MDSVSENSOR 3 USB Color Sensor

This customized X-Rite color sensor can be used with the Display Wall Calibrator software listed above. Please contact an authorized dealer or see our website in your region for purchase information and availability.

Appendix C OSD Controls List

This Chapter Includes

- ⇨ “INPUT” on page 87
- ⇨ “PICTURE” on page 90
- ⇨ “AUDIO” on page 97
- ⇨ “SCHEDULE” on page 98
- ⇨ “SLOT” on page 99
- ⇨ “NETWORK” on page 101
- ⇨ “PROTECT” on page 102
- ⇨ “SYSTEM” on page 104

Default values can be provided on request.

INPUT

INPUT MENU	
INPUT SELECT	Selects the input signals source. DisplayPort1, DisplayPort2, HDMI1, HDMI2, COMPUTE MODULE*1 or OPTION*2.
INPUT SETTINGS	
INPUT NAME	To rename the input: 1. Highlight the name field. 2. Press SET on the IR remote control to activate the field. • Use the ◀/▶ buttons to navigate to the character you want to change. • Press the ▲/▼ buttons to cycle through the available characters (A-Z, 0-9, special characters, and space). • Press the SET button when on a letter to switch between uppercase and lowercase. 3. Press EXIT to save the name and exit the name field. Custom names with a maximum of 14 characters, including spaces, can be set. The characters can be a mix of letters (A-Z), numbers (0-9), and some symbols.
NAME RESET	Returns the current input name to its factory default. Highlight [PROCEED] and press SET on the remote control to reset the input name.
QUICK INPUT CHANGE	Enables high-speed switching between the two input terminals selected for [INPUT1] and [INPUT2]. OFF: Input terminal is changed at normal speed. ON: Input terminal is changed at high speed. NOTE: • When [DUAL DAISY CHAIN MODE] is set to [ENABLE], or input is [DisplayPort1] then [DisplayPort VERSION] is set to [1.4], this function is disabled. • When this function is activated, [MULTI PICTURE], STILL, POINT ZOOM, and [AUDIO INPUT] are immediately deactivated.
AUTO INPUT CHANGE*3	This function automatically selects the input terminal with an input signal. When enabled, this option can detect and change inputs when a signal is applied or lost. Allows for customization of the input priority. NOTE: • When [DUAL DAISY CHAIN MODE] is set to [ENABLE], this function is deactivated. • When [HUMAN SENSING] is enabled, this function is deactivated.
NONE	The monitor does not search for video signal on the other input connections. If video signal is lost on the current input, or if the monitor is manually switched to an input that does not have video signal, the screen will go black. If [POWER SAVE] is enabled, the monitor will enter power saving mode after the period of time set for [POWER SAVE] has passed.
FIRST DETECT	The monitor does not search for a video signal on the other input connections while the current input has a video signal. If the current input connection does not have video signal present, the monitor will search for video signal on the other video input connections. If a video signal is found, the monitor will switch from the current input to the input with the active video source automatically.
LAST DETECT	The monitor actively searches for a video signal on the other input connections, even while the current video signal is present. When a new video signal source is applied to another input connection, the monitor automatically switches to the newly found video source. If the video signal is lost on the current input connection, the monitor will search for video signal on the other video input connections. If a video signal is found, the monitor will switch from the current input to the input with the active video source automatically.
CUSTOM DETECT	The monitor only searches for video signal on the inputs selected for the priority numbers. If the signal is lost, the monitor searches for signal in the priority order and automatically switches to the highest priority input it finds with an active video signal. The monitor actively searches these inputs. If the current signal input is not Priority 1 and a new signal is applied to the input assigned to Priority 1, the monitor will automatically switch to the higher priority input. NOTE: • If you select [CUSTOM DETECT], you cannot switch to an input signal for which [PRIORITY] has not been set.

INPUT MENU	
INPUT SIGNAL INFORMATION	Shows input signal information.
CURRENT INPUT	These functions shows their current settings in the [INPUT SIGNAL INFORMATION] for the selected input signal. NOTE: The functions listed here do not have settings for all input terminals available.
RESOLUTION	
FREQUENCY	
COLOR FORMAT	
HDR EOTF	
COLOR DEPTH (SIGNAL/DISPLAY)	
HDCP	
VIDEO RANGE	
VIDEO ID CODE	
OVERSCAN	
ADVANCED	
INPUT SIGNAL SETTINGS	Configure settings specific to the video input terminal.
DisplayPort DisplayPort1, DisplayPort2, OPTION (DisplayPort)*2 inputs only	Select the DisplayPort input feature.
DisplayPort VERSION	The following settings can be made according to the input selection. DisplayPort1: 1.1a, 1.2, 1.4 DisplayPort2: 1.1a, 1.2 OPTION (DisplayPort): 1.1a, 1.2 Select [SST] or [MST] when [1.2] or [1.4] is set. NOTE: • When receiving an 8K signal, select [1.4] for [DisplayPort1]. • [MST] is available on the DisplayPort1 input terminal only. • [1.4] is available on the DisplayPort1 input terminal only. • If [1.4] is selected, the following restrictions are applied: - Deactivates [MULTI PICTURE], [MOTION] in [SCREEN SAVER], STILL, POINT ZOOM, [IMAGE FLIP], [QUICK INPUT CHANGE], [DUAL DAISY CHAIN MODE], [AUDIO INPUT], [ROTATE], [TILE COMP], [TILE CUT] and [DP to HDMI CONVERT]. - [H MONITORS] and [V MONITORS] in [TILE MATRIX] is up to [2].
HDCP VERSION	Depending on the selection in the [DisplayPort VERSION], set items as below. 1.2: HDCP 1.3, HDCP 2.2 1.4: HDCP 1.3, HDCP 2.2 NOTE: When [DisplayPort VERSION] is set [1.1a], this function set [HDCP1.3] automatically.
HDR	Depending on the selection in the [DisplayPort VERSION], set items as below. 1.2: ENABLE, DISABLE 1.4: ENABLE, DISABLE NOTE: When [DisplayPort VERSION] is set [1.1a], this function is disabled.
EQUALIZER	Compensates the video signal for better image stability. If the image flashes or picture noise occurs, please change the setting.
DSC	Enables displaying compressed images. (DSC is an abbreviation of Display Stream Compression). - Input signal 8K 60 Hz SST connection. (4 monitors in a multi-monitor daisy-chain setup (including this monitor)). - Input signal 4K 60 Hz MST connection. NOTE: • DSC is only available when [DisplayPort VERSION] is set to [1.4]. Note that version 1.4 is only available on the DisplayPort1 input. • For signals compressed by DSC, the input signal is output as-is.

INPUT MENU		
HDMI HDMI1, HDMI2, OPTION (TMDS)*2 inputs only		
	HDMI MODE	Selects the type of HDMI mode (version) [MODE1] or [MODE2]. MODE1: Max resolution is 3840 x 2160 (30 Hz). MODE2: Max resolution is 3840 x 2160 (60 Hz), HDCP 2.2, or HDR.
	HDCP VERSION	Select [HDCP 1.4] or [HDCP 2.2].
	HDR	MODE2: ENABLE, DISABLE. NOTE: If [HDMI MODE] is set to [MODE1], this function is disabled.
	EQUALIZER	Compensates the video signal for better image stability. If the image flashes or picture noise occurs, please change the setting.
SIGNAL FORMAT		
	OVERSCAN HDMI1, HDMI2, OPTION (TMDS)*2, COMPUTE MODULE*1 inputs only	ON: The image is scaled to best fit the screen without changing the aspect ratio. Some images will have cropped edges. Approximately 95 % of the image will be shown on the screen. OFF: The whole image is displayed within the screen area. This setting may cause distorted image at the edges. NOTE: When you use a computer with HDMI out, please set [OFF]. AUTO: Image size is set automatically.
	VIDEO RANGE	Adjust the gradation range to be displayed according to the video signal to improve the whiteout and blackout of the image. FULL: For computer settings. Show all input signals of 0-255 gray levels. LIMITED: For audio-visual equipment settings. Expands the input signals from 16-235 gray levels to 0-255 gray levels. AUTO: Automatically sets input signals by detecting connected equipment.
	COLORIMETRY	Selects the color space setting from AUTO, RGB, YCbCr (BT.601), YCbCr (BT.709), YCbCr (BT.2020).
CEC		Provides CEC (Consumer Electronics Control) compatible media players, connected via HDMI, the ability to communicate and allows limited control between the device and the monitor. Only available for HDMI inputs.
	CEC	When [MODE1] or [MODE2] is selected, the following functions are automatically activated: Also, when the compatible device is started from standby mode, this unit also works together to turn on the power from standby mode. - When a connected CEC media device plays, the monitor will turn on and/or change to the HDMI input with the connected media device. - The monitor's wireless remote control can be used to control some of the media player device functions. When [MODE1] is selected, the wireless remote control CEC functions are: 1 (⏮), 2 (▶), 3 (⏭), 5 (■), 6 (⏸), ENT, EXIT, ▲, ▼, ◀, ▶, MUTE, VOL+, VOL–. When [MODE2] is selected, the wireless remote control CEC functions are: 0 to 9 and – on the keypad, ENT, EXIT, ▲, ▼, ◀, ▶, GUIDE, MUTE, SET/POINT ZOOM, VOL+, VOL–, CH/ZOOM+, CH/ZOOM–. Depending on the type of the connected device, the CEC functions may not work as described. Not all manufacturers provide the same level of CEC integration and control, or they may only provide support for their products. NOTE: When [MODE1] or [MODE2] is selected, POINT ZOOM is deactivated.
	POWER CONTROL LINK	The HDMI-CEC compatible device goes into standby at the same time as the monitor when the STANDBY button is pressed on the remote control, or when the ⏻ button is pressed on the monitor. NOTE: The connected HDMI-CEC compatible device may not go into standby if it is recording.
	AUDIO RECEIVER	When [ENABLE] is selected, the monitor's internal speaker or the external speaker connected to the monitor is muted and connected audio equipment with ARC function outputs the sound. When [DISABLE] is selected, connected audio equipment with ARC function is muted and the monitor's internal speaker or the external speaker connected to the monitor outputs the sound. NOTE: It may take a while to output the sound when changing [AUDIO RECEIVER] settings, but this is not a failure of the monitor.

INPUT MENU			
		SEARCH DEVICE	Searches the HDMI input for a connected HDMI-CEC compatible device. If a device is found, the connected HDMI-CEC compatible device's type and registered device name are shown. After detecting HDMI-CEC compatible devices, you can switch the device input by selecting the device. NOTE: In some situations, the entire text of the registered name and device type may not fully show. In this case, please note the device by both the device type and registered name connected to an input.
	BACKGROUND COLOR		Adjusts the color of the borders that show when an image does not fill the entire screen. For example, these borders are seen when a 4:3 image is shown or when a picture-by-picture option in Multi-Picture Mode is on and the inputs do not entirely fill the screen. Press the ▶ button to make the borders lighter, the level can be increased until the color is white. Press the ◀ button to make the borders darker, the level can be decreased until the color is black.
	VIDEO OUT SETTINGS		
		DUAL DAISY CHAIN MODE	When MAIN INPUT signal is not detected, switch input from MAIN INPUT to SUB INPUT signal in a daisy chain configuration. MAIN INPUT: DisplayPort1, DisplayPort2, HDMI1, HDMI2, COMPUTE MODULE*1, OPTION*2. SUB INPUT: DisplayPort1, DisplayPort2, HDMI1, HDMI2, COMPUTE MODULE*1, OPTION*2. NOTE: • This function deactivates [MULTI PICTURE], STILL, POINT ZOOM, [QUICK INPUT CHANGE], [AUTO INPUT CHANGE] and [AUDIO INPUT]. • If input is set to [DisplayPort1] and the [DisplayPort VERSION] is set to [1.4 SST], this function is deactivated. • During [DUAL DAISY CHAIN MODE] operation, you cannot switch to an input that is not specified in the main input or sub input.
		DP TO HDMI CONVERT	Converts the video signal input from the DisplayPort terminal to HDMI and outputs to HDMI terminal. NOTE: If input is set to [DisplayPort1] and the [DisplayPort VERSION] is set to [1.4], this function is deactivated.
RESET			Resets all INPUT settings back to factory settings except for [INPUT SELECT], [INPUT NAME], [INPUT1] and [INPUT2] in [QUICK INPUT CHANGE] and [PRIORITY] in [CUSTOM DETECT] in [QUICK INPUT CHANGE].

*1: This function is only available when Raspberry Pi Compute Module Interface Board and Raspberry Pi Compute Module are installed. See page 84.
*2: This function depends on which Option Board you are using. This function is only available when Option Board is installed.
*3: Depending on the device, it may not be detected correctly.

PICTURE

PICTURE MENU			
PICTURE MODE When [SPECTRAVIEW ENGINE] is set to [OFF]			Provides pre-configured picture settings suitable for various environments where this device may be used, or customize settings to viewer preference. See page 51.
	BACKLIGHT		Adjusts the overall image and background brightness. Press ◀ or ▶ to adjust. NOTE: [ON] is selected in [AMBIENT LIGHT SENSING] at [ADVANCED], this function cannot be changed.
	VIDEO BLACK LEVEL		Adjusts the black luminance.
	GAMMA		
		NATIVE	Gamma correction is handled by the LCD panel.
		2.2	Typical monitor gamma for use with a computer.
		2.4	Typical gamma settings for use with videos, such as DVDs and Blu-rays.
		S GAMMA	Special gamma for certain types of movies. Raises the light parts and lowers the dark parts of the image (S-Curve).
		DICOM SIM.	DICOM GSDF curve simulated for LCD type.
		HDR-ST2084 (PQ)	Gamma setting for HDR, typically for UHD disk media and streaming videos.
		HDR-HYBRID LOG	Gamma setting for HDR, typically for UHD broadcasting.
		PROGRAMMABLE1, 2, 3	A programmable gamma curve can be loaded using our optional software.
		AUTO HDR SELECT HDMI input only	GAMMA correction of HDR signal automatically changes to [HDR-ST2084 (PQ)] or [HDR-HYBRID LOG].

PICTURE MENU			
	COLOR		
		COLOR	Adjusts the color saturation of the screen. Press ◀ or ▶ button to adjust.
		COLOR TEMP:	Adjusts the color temperature of the entire screen. A low color temperature will result in a reddish screen. A high color temperature will make the screen bluish. Adjusting the slider one-step past the highest temperature shown enables [NATIVE], which initiates the panel's default white color without temperature adjustment. If TEMPERATURE needs further adjustment, the individual R/G/B GAIN levels of the white point can be adjusted. Use the sliders for the individual R/G/B GAIN levels to adjust the color temperature. Note that the [COLOR TEMP] setting will change to [CUSTOM] when one of the GAIN level sliders is adjusted. NOTE: When [PROGRAMMABLE1], [PROGRAMMABLE2] or [PROGRAMMABLE3] is selected in [GAMMA CORRECTION], this function cannot be changed.
		COLOR CONTROL	Adjusts the hue of the Red, Yellow, Green, Cyan, Blue and Magenta colors individually. For example, you can change red to yellow or purple.
	CONTRAST		Adjusts the image brightness in relationship to the input signal. Press ◀ or ▶ button to adjust.
	BACKLIGHT DIMMING		Automatically adjusts each of the clusters of the backlight of the LCD independently, according to the input signal. NOTE: • If [AUTO BRIGHTNESS] is set to [MODE 2], this function cannot be changed to [OFF]. • At the time of shipment from the factory, this function is grayed out and [OFF] cannot be set. To turn it off, set [AUTO BRIGHTNESS] to something other than [MODE2].
PICTURE MODE When [SPECTRAVIEW ENGINE] is set to [ON]			Provides pre-configured picture settings suitable for various environments where this device may be used, or customize settings to viewer preference.
	PICTURE MODE		Five customizable Picture Mode memories [1], [2], [3], [4] or [5]. See page 45.
		EMULATION	
			3D LUT EMU.	The 3D LUT (Look Up Table) is a three-dimensional table that maps colors into different color spaces. The SpectraView Engine inside this monitor allows complex color gamuts, such as those for color printers, to be emulated on the monitor directly. For example, this allows print previews or cinematic or color grading effects to be performed within the monitor itself. This feature is used with supporting software. 3D LUTs are uploaded to the monitor via application software. ON: Enables/Activates the 3D LUT function for the selected picture mode. OFF: Disables/Deactivates the 3D LUT function for the selected picture mode. Compare: In this mode, colors that lie outside the boundaries of the 3D LUT are shown in gray. It is useful for determining out of gamut colors.
			COLOR VISION EMU.	Previews various typical human vision deficiencies and is useful for evaluating how people who have such deficiencies will perceive colors. This preview is available in types: • P (Protanopia) • D (Deuteranopia) • T (Tritanopia) Grayscale can be used for evaluating contrast legibility. NOTE: Depending on the vision of the user, including those with color vision deficiency, there will be a variation in how the screen's color is seen and experienced. A simulation is used to illustrate the view of those with a color vision deficiency. It is not their actual view. The simulation is a reproduction of those with a strong color vision mode of type P, type D or type T. People with a slight color vision deficiency will experience little to no difference compared to those with normal color vision.

PICTURE MENU		
	6 AXIS COLOR TRIM	With these controls, the standard color circle is divided into 6 separate ranges/areas: Reds, Yellows, Greens, Cyans, Blues, and Magentas. Each range can be individually adjusted in Hue, Saturation, and Offset (Brightness) for specific matching purposes. Neutral colors (grays) will not be impacted.
	RED (HUE/SAT./OFFSET) YELLOW (HUE/SAT./OFFSET) GREEN (HUE/SAT./OFFSET) CYAN (HUE/SAT./OFFSET) BLUE (HUE/SAT./OFFSET) MAGENTA (HUE/SAT./OFFSET)	HUE: Changes the actual color within its range on the color wheel without changing the saturation and offset. For example, the Red color range shifts reds towards Yellow or Magenta, the Yellow color range shifts yellows towards Red or Green, and so on. SAT. (Saturation): Changes the intensity of the color range without changing the hue and offset. OFFSET: Changes the brightness of the color range without changing the hue and saturation. e.g.: This is the color changes when Red color set to minimum value and maximum value at HUE/SAT./OFFSET. 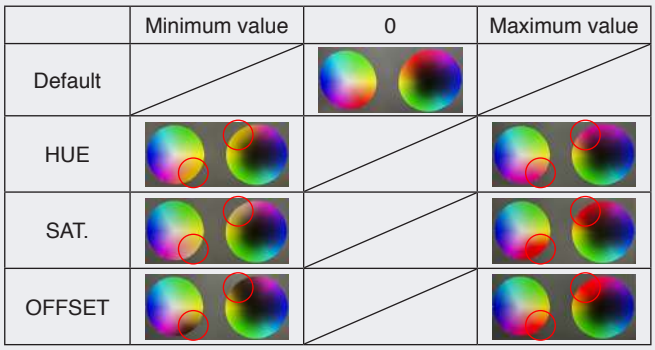 Minimum value / 0 / Maximum value Default HUE SAT. OFFSET
	UNIFORMITY	This function improves the color reproduction and evens out the non-uniformity in luminance of the monitor. NOTE: A higher number produces a better effect, but may also affect power consumption and lifetime of the monitor.
BACKLIGHT DIMMING When [SPECTRAVIEW ENGINE] is set to [ON]		Automatically adjusts each of the clusters of the backlight of the LCD independently, according to the input signal.
SPECTRAVIEW ENGINE		
	SPECTRAVIEW ENGINE	Select [ON] to activate [SPECTRAVIEW ENGINE] (see page 45).
	NUMBER OF PICT. MODES	Limits the number of selectable Picture Modes. Limiting the number of selectable Picture Modes can be used for the following purposes: • Locking. By setting to [1], it will prevent other Picture Modes from being accessed and adjusted. • Skip. If there are unused Picture Modes that aren't needed, they can be skipped when using the Picture Mode button on the remote control to toggle modes. For example, if [3] is set for [NUMBER OF PICT. MODES], the available picture modes are [1, 2, 3] and the other modes will be skipped.
	METAMERISM	Improves the white point color matching when the display is used side-by-side with a standard gamut display monitor. This feature compensates for the way the human eye perceives colors slightly differently compared to the scientific instrument used to adjust the monitor during calibration. This function should be disabled in color critical applications.
	CALIBRATION	Starts the "Stand-Alone Calibration" when using a USB color sensor. See page 49.

PICTURE MENU	
ADVANCED	
UHD UPSCALING	Achieves high-definition effect.
SHARPNESS	Adjusts the crispness of the image. Press ◀ or ▶ button to adjust.
ASPECT	Select the aspect ratio of the screen image. NOTE: • When starting tile matrix in multi-monitor installations, if the [ASPECT] is [ZOOM] it will be changed to [FULL] before tile matrix starts. After tile matrix is complete, the aspect will return to [ZOOM]. • If you change [H POS] and [V POS] settings with a reduced image, the image will not be changed. • The [ASPECT] automatically changes to [FULL] when the [SCREEN SAVER] starts. When the [SCREEN SAVER] stops, the [ASPECT] returns to its previous setting. • This function is not available when [MOTION] in [SCREEN SAVER] is active. • The POINT ZOOM function has limitations when [ASPECT] is changed. Please refer to Point Zoom on page 40. • [ZOOM] is not available for an image with a DisplayPort input 4K (60 Hz) 10bit. • If the [ASPECT] is [ZOOM] while tile matrix is active, when tile matrix is released, the [ASPECT] will be [ZOOM].
NORMAL	Shows the aspect ratio as it is sent from the source.
FULL	Fills the entire screen.
WIDE	Expands a 16:9 letterbox signal to fill the entire screen.
1:1	Shows the image in a 1 by 1 Pixel format. (If the input resolution is higher than the recommended resolution, the image will be scaled down to fit the screen).
ZOOM	Expands/reduces the image. NOTE: The areas of the expanded image that are outside of the active screen area are not shown. The reduced image may have some image degradation.
ZOOM	Maintains the aspect ratio while zooming.
HZOOM	Horizontal zoom value.
VZOOM	Vertical zoom value.
H POS	Horizontal position.
V POS	Vertical position.
ADAPTIVE CONTRAST HDMI1, HDMI2, OPTION (TMDS)*2, COMPUTE MODULE*1 inputs only	Sets the level of adjustment for dynamic contrast. If HIGH is set, the image is shown clearly but it makes brightness unstable due to the wide gap in contrast variation. NOTE: When [SPECTRAVIEW ENGINE] is set to [ON], this function is disabled.
UNIFORMITY	This function improves the color reproduction and evens out the non-uniformity in luminance of the monitor. NOTE: When [SPECTRAVIEW ENGINE] is set to [ON], this function is disabled. Instead, [UNIFORMITY] is enabled and saved in the SpectraView [PICTURE MODE] settings. See page 90.
AUTO DIMMING	Adjusts the backlight of the LCD automatically depending on the amount of ambient light.
AUTO BRIGHTNESS	Adjusts the brightness level according to the input signal. NOTE: • [MODE1] is disabled when [AMBIENT LIGHT SENSING] function is set to [ON]. • When [SPECTRAVIEW ENGINE] is set [ON], this function is disabled.

PICTURE MENU			
	AMBIENT LIGHT SENSING		The backlight of the LCD panel can be set to increase or decrease depending on the amount of ambient light within the room. If the room is bright, the monitor becomes correspondingly bright. If the room is dim, then the monitor will dim accordingly. The purpose of this function is to make the viewing experience more comfortable to the eye in a variety of lighting conditions. The ambient parameter setting: [AMBIENT LIGHT SENSING] in OSD, select [ON] and set [ILLUMINANCE] and [BACKLIGHT]. IN BRIGHT: Setting to use in a bright room. ILLUMINANCE - The illuminance level in a bright room. BACKLIGHT - The maximum level of backlight in a bright room. IN DARK: Setting to use in a dim room. ILLUMINANCE - The illuminance level in a dim room. BACKLIGHT - The minimum level of backlight in a dim room. STATUS: Shows the current setting level of [ILLUMINANCE] and [BACKLIGHT]. When the [AMBIENT LIGHT SENSING] is enabled the Backlight level of the screen changes automatically according to the lighting conditions of the room (see figure below). 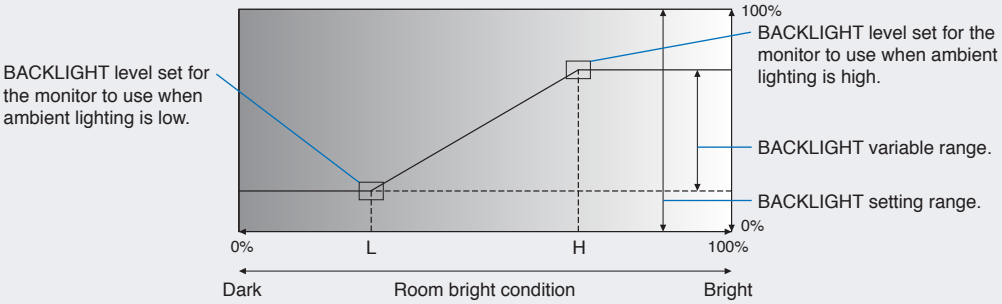 L - ILLUMINANCE level set for the monitor to use when ambient lighting is low. H - ILLUMINANCE level set for the monitor to use when ambient lighting is high. NOTE: • When [AMBIENT LIGHT SENSING] is set, [BACKLIGHT] and [MODE1] in [AUTO BRIGHTNESS] functions are disabled. • Do not select this function when [AUTO BRIGHTNESS] function is set to [MODE1]. • Do not cover the optional sensor unit when [AMBIENT LIGHT SENSING] is enabled. [AMBIENT LIGHT SENSING] is enabled when it is set to [ON]. • When [SPECTRAVIEW ENGINE] is set [ON], this function is disabled.
	HUMAN SENSING*3		Automatically adjusts the backlight and volume levels based on whether or not a human presence is detected in front of the monitor. NOTE: • If [AUTO INPUT CHANGE] is set to other than [NONE], this function is set to [DISABLE].
		DISABLE	Human sensing function is off.
		AUTO OFF	The monitor's backlight automatically turns off, and the volume mutes when no human presence is detected during the period set at [WAITING TIME]. When a person is near the monitor again, the monitor will automatically return to normal mode.
		CUSTOM	The monitor's input signal, backlight and volume levels automatically shift to the setting at [INPUT SELECT], [BACKLIGHT] and [VOLUME] when no human presence is detected during the period set at [WAITING TIME]. When a person is near the monitor again, the monitor will automatically return the backlight and volume to normal levels and reproduce the input signal selected for [INPUT SELECT]. NOTE: When [SPECTRAVIEW ENGINE] is set to [ON], the [BACKLIGHT] option is disabled. The backlight settings cannot be auto-adjusted when the SpectraView Engine is on as the setting is saved in a picture mode.
AUTO TILE MATRIX			AUTO TILE MATRIX sets the Tile Matrix settings automatically for all monitors in the chain, starting from the primary monitor. Please refer AUTO TILE MATRIX in the "Connecting Multiple Monitors" on page 57.

PICTURE MENU			
TILE MATRIX			
	TILE MATRIX	Allows one image to be expanded and shown over multiple screens (up to 100) through a distribution amplifier. This option is for manually configuring the TILE MATRIX settings that are automatically configured when using [AUTO TILE MATRIX SETUP]. NOTE: • Low resolution is not suitable for tiling to a large number of monitors. • You can operate with a distribution amplifier or DisplayPort out or HDMI out to send signal to the connected monitors. These functions are not available when [TILE MATRIX] is active: [MULTI PICTURE MODE], STILL and POINT ZOOM remote control buttons. • The tile matrix automatically deactivates when enabling any of the following functions: - Selecting an [IMAGE FLIP] option in the [IMAGE FLIP] menu (except for [NONE]) or activating [MOTION] in the [SCREEN SAVER] menu. • If [ZOOM] is the selected aspect setting, they function as [FULL] aspect when the tile matrix is active. When the tile matrix deactivates, aspect changes to [ZOOM]. • POINT ZOOM function automatically deactivates when [TILE MATRIX] is activated. Please refer to the POINT ZOOM function for more detail. See page 40. • When input signal is DisplayPort4K (60 Hz)10bit, [TILE MATRIX] is not available. • If input is set to [DisplayPort1] and the [DisplayPort VERSION] is set to [1.4], [H MONITORS] and [V MONITORS] setting is up to [2].	
	H MONITORS	Number of monitors arranged horizontally.	
	V MONITORS	Number of monitors arranged vertically.	
	POSITION	Select the section of the tiled image to view on the current monitor.	
	TILE COMP	Adjusts the image to compensate for the gap between monitors. When activated, the image size and position can be adjusted by pressing the ◀ or ▶ button on the remote control. NOTE: If input is set to [DisplayPort1] and the [DisplayPort VERSION] is set to [1.4], this function is disabled.	
	TILE CUT	Selects part of the image and displays it on the full screen. Adjust the frame size using [H MONITORS] and [V MONITORS], then choose a frame [POSITION]. The frame position can be adjusted by pressing the ◀ or ▶ button on the remote control. NOTE: If input is set to [DisplayPort1] and the [DisplayPort VERSION] is set to [1.4], this function is disabled.	
IMAGE FLIP			
	IMAGE FLIP	Changes the orientation of the image to left/right, up/down, or rotated. Press ◀ button or ▶ button to select. NOTE: • When an IMAGE FLIP option is selected, except for [NONE], the following functions are disabled: [MULTI PICTURE MODE], STILL, POINT ZOOM, [ROTATE] and [TILE MATRIX]. • When the input signal is interlaced, the image may be distorted. • When an IMAGE FLIP option is selected, except for [NONE], if input is set to [DisplayPort1] and the [DisplayPort VERSION] is set to [1.4] or [SCREEN SAVER] is set to [MOTION], this function is released.	
	NONE	Normal mode.	A B
	H FLIP	Flips the image left/right.	B A
	V FLIP	Flips the image up/down.	A B
	180° ROTATE	Rotates the image 180 degrees.	A B
	OSD FLIP	Determines the OSD menu direction. If [ON] is selected, the OSD orientation will be adjusted based on the selection for [IMAGE FLIP].	

PICTURE MENU		
	MULTI PICTURE	
	MULTI PICTURE MODE	When [OFF] is selected, one picture is shown. Select [2PIP], [2PBP] or [4PBP] then set input to each picture. 2PIP 2PBP 4PBP A: PICTURE 1 B: PICTURE 2 C: PICTURE 3 D: PICTURE 4 NOTE: • This function is released when the following functions are active: [MOTION] in [SCREEN SAVER], [IMAGE FLIP] (except for [NONE]), [TILE MATRIX], [QUICK INPUT CHANGE], [DUAL DAISY CHAIN MODE] or if input is set to [DisplayPort1] and the [DisplayPort VERSION] is set to [1.4]. • STILL or POINT ZOOM functions will not work when this function is activated. • If [CEC] is set to [MODE1] or [MODE2], [MULTI PICTURE] setting via remote control may have some limitations. • DisplayPort input has a limitation when picture number is set to [4PBP]. In the selection of [DisplayPort1], [DisplayPort2], [OPTION (DisplayPort)], you can set two inputs only. • When picture number is set to [4PBP], [ROTATE] is disabled.
	AUDIO	Selects which audio source to use when [MULTI PICTURE] is enabled. When either picture is selected, the sound of that picture is output. NOTE: This function deactivates [AUDIO INPUT].
	ACTIVE PICTURE	When [MULTI PICTURE MODE] is [OFF], [PICTURE1] is the active picture. When [MULTI PICTURE MODE] is set except for [OFF], select an active picture from several pictures.
	ACTIVE FRAME	The active picture is shown within a white frame.
	PICTURE SIZE	Sets the Active Picture size. Press the SET/POINT ZOOM button to adjust the picture size. Press ▶ button or CH/ZOOM+ button to expand. Press ◀ button or CH/ZOOM– button to reduce. NOTE: • When [MULTI PICTURE MODE] is set to [2PIP] and [ACTIVE PICTURE] is set to [PICTURE1], this function is deactivated. • When [MULTI PICTURE MODE] is set to [4PBP], this function is deactivated.
	PICTURE POSITION	Sets the Active Picture location. Pressing the ▶ button moves the Active Picture to the right, and pressing the ◀ button moves it to the left. Pressing the ▲ button moves the Active Picture up, and pressing the ▼ button moves it down. NOTE: • When [MULTI PICTURE MODE] is set to [2PIP] and [ACTIVE PICTURE] is set to [PICTURE1], this function is deactivated. • When [MULTI PICTURE MODE] is set to [4PBP], this function is deactivated.

PICTURE MENU		
	ROTATE	Sets the multi-screen rotation. NOTE: • The POINT ZOOM function will not work if this function is enabled. • This function is canceled when [DisplayPort VERSION] in [DisplayPort1] is set to [1.4] or [SCREEN SAVER] is set to [MOTION] or [IMAGE FLIP] is set to [NONE]. • If input signal is Interlaced signal this function is disabled. • If input is DisplayPort 4K (60 Hz) 10bit, this function is disabled.
	ROTATE ALL	Rotate all pictures.
	PICTURE1	Rotates [PICTURE1].
	PICTURE2	Rotates [PICTURE2].
RESET		Resets all PICTURE settings back to factory settings except for [PICTURE MODE] and [SPECTRAVIEW ENGINE].

*1: This function is only available when Raspberry Pi Compute Module Interface Board and Raspberry Pi Compute Module are installed. See page 84.
*2: This function depends on which Option Board you are using. This function is only available when Option Board is installed.
*3: This function is available only when connecting the optional sensor unit.

AUDIO

AUDIO MENU		
AUDIO MODE		Provides pre-configured audio settings suitable for various environments where this device may be used, or customize settings to viewer preference. NATIVE: Standard setting. RETAIL: Surround sound for clarity of audio in retail stores. CONFERENCING: Optimized settings for clarity of audio in conference rooms. HIGHBRIGHT: Lowest volume level in order to focus on the visual message (audio is mute in factory setting). TRANSPORTATION: Lowest volume level in order to avoid disturbance in public spaces (audio is mute in factory setting). CUSTOM: Customizable settings.
	VOLUME	Increase or decrease output volume level.
	BALANCE	Select [STEREO] or [MONO] for the audio output.
	STEREO/MONO	STEREO: Independent audio channels for routing audio signal. Sound balance of the monitor's internal speaker or the external speaker connected to the monitor between the left and right can be adjusted. - Press the ▶ button to move the audio signal to the right. - Press the ◀ button to move the audio signal to the left. MONO: Audio signals are routed through a single audio channel. Balance cannot be adjusted and the slider will be unavailable.
	SURROUND	Artificially produces surround sound audio.
	EQUALIZER	
	TREBLE	Accentuates or reduces the high frequency range of audio signals. Press the ▶ button to increase [TREBLE]. Press the ◀ button to decrease [TREBLE].
	BASS	Accentuates or reduces the low frequency sound. Press the ▶ button to increase [BASS]. Press the ◀ button to decrease [BASS].

AUDIO MENU		
	SPEAKER SELECT	Controls audio signal routing between the internal and external speakers. If the speaker setting is changed, the monitor must be powered off and on. After changing the speaker setting, close the OSD menu and power cycle the monitor using the main power switch. NOTE: When using the Audio Out connection on the monitor's terminal panel, select [EXTERNAL]. Sound is always available on the Audio Out connection. When [INTERNAL] is selected and speakers are connected to Audio Out, sound is duplicated and can cause audio feedback, echo, static, etc.
	INTERNAL	Routes audio to the internal speakers.
	EXTERNAL	Routes audio to an optional external speaker.
ADVANCED		
	LINE OUT	Selecting [VARIABLE] enables volume control of the audio signal on the AUDIO OUT connector with the VOLUME button on the remote control or monitor control panel.
	AUDIO DELAY	Select this option if there is a noticeable delay between the video image and the audio signal output. When this option is on, the audio signal can be delayed for a period of between 0 and 100 milliseconds. This allows delays in the video, that may occur due to video processing such as DEINTERLACE, to be matched by an equal delay in the audio signal to avoid lip-sync errors.
	AUDIO DELAY	
	DELAY TIME	
	AUDIO INPUT	Selects the audio source for the current input. Selects the audio input source: [DisplayPort1], [DisplayPort2], [HDMI1], [HDMI2], [COMPUTE MODULE*] and [OPTION*1]. NOTE: This function is disabled when the following functions are active: [MULTI PICTURE], [QUICK INPUT CHANGE], [DUAL DAISY CHAIN MODE] or if input is set to [DisplayPort1] and the [DisplayPort VERSION] is set to [1.4].
RESET		Resets all AUDIO settings back to factory settings except for [AUDIO MODE].

*: This function is only available when Raspberry Pi Compute Module Interface Board and Raspberry Pi Compute Module are installed. See page 84.
*1: This function depends on which Option Board you are using. This function is only available when Option Board is installed.

SCHEDULE

SCHEDULE MENU		
SCHEDULE SETTINGS		Creates a working schedule for the monitor (see page 44). Press the ▲, ▼, ◀, ▶ buttons to navigate and change the schedule settings. Press the SET/POINT ZOOM button on the remote control or Input change buttons on the monitor to select settings.
	SETTINGS	Highlight the number and press SET/POINT ZOOM button to activate the schedule. The box next to the number has an outline when the schedule is enabled. Up to 14 schedules can be created and enabled. Press the ◀ or ▶ button to cycle through schedule numbers.
	POWER	Sets the monitor's power state for the schedule. Select [ON] if you want the schedule to turn the monitor on at the specified time. Select [OFF] if you want the schedule to turn the monitor off at the specified time.
	TIME	Set the start time for the schedule. NOTE: Fill in both fields for the TIME setting. If either field shows [--], the schedule does not run.
	INPUT	Select which video input to use for the schedule. To keep the active input when the schedule starts, make sure the setting is [--]. If you do select a specific input, set [ON] at [POWER].
	DATE	
	YEAR	Select this option if the schedule is only going to run on one day or it is an irregular schedule.
	MONTH	
	DAY	
	EVERY WEEK	Select this option to have the schedule repeat every week.
OFF TIMER		Powers off the monitor after the time period shown next to the slider. Press the ◀ or ▶ button on the remote control to adjust the timer from 1 to 24 hours. NOTE: Schedules do not run when the [OFF TIMER] is set to [ON].
RESET		Resets all SCHEDULE settings back to factory setting, except for [OFF TIMER].

SLOT

SLOT MENU		
OPTION*2		Configure settings for a connected Option Board.
	POWER CONTROL	
		POWER SUPPLY	Controls power to an Option Board. Select [ON] then press SET on the remote control to power on the device. Select [OFF] then press SET on the remote control to power off the device. NOTE: The option that is highlighted under [POWER SUPPLY] when you open the [POWER CONTROL] menu indicates the current power status. If [ON] is highlighted, the power is on. If [OFF] is highlighted, the power is off.
		POWER BUTTON	Allows the same operation as the power button on the installed Option Board.
		FORCE SHUTDOWN	Press SET to force a shutdown of the device installed in the option slot. NOTE: Please use this function only when the operating system cannot be shut down manually.
		RESET	Press SET to force a shutdown and restart of the Option Board when it does not respond to shutdown using the [POWER BUTTON] or [FORCE SHUTDOWN] function. NOTE: • This function may corrupt data files on the Option Board or data files on a storage device connected to an installed Option Board. • Please only use this function when [POWER BUTTON] and [FORCE SHUTDOWN] cannot be carried out.
		Connection Status*3	Shows the connection status of an Option Board. If the status is not “Connected” then a device is not installed.
		Power Status*3	Shows the operating status of the installed Option Board.
		Module*3	Shows information about the installed Option Board.
	POWER SETTING		
		AUTO POWER UP	The installed Option Board will be turned on automatically when the monitor power is turned on.
		AUTO SHUTDOWN*4	The installed Option Board is turned off when the monitor switches into standby mode.
		POWER SUPPLY OFF DELAY	When [OFF] is selected at [OPTION POWER], this sets the time delay after [AUTO SHUTDOWN] executed until the power to the Option Board is turned off.
		AUTO DISPLAY OFF	Allows the monitor to switch into the same status when the installed device is switched into standby or power save mode. NOTE: This function does not affect power on. Enabling this function will not cause the monitor to automatically power on when the Option Board turns on.
		OFF WARNING	Shows a warning, when shutting down the power to the Option Board, that the device should be turned off from within the OS of the device. This message cannot be changed. This message displays when [POWER SUPPLY] is set to [OFF].
	ADVANCED SETTING		
		CHANNEL SELECT	Allows the monitor to show two video signals, DisplayPort and TMDS of the device installed in the option slot. When [AUTO] is selected, the screen display is set according to the specifications of the device installed in the option slot.
		INTERFACE CAPABILITY	Shows the signals supported by the device installed in the option slot.

SLOT MENU	
COMPUTE MODULE*	Configure settings for a Raspberry Pi Compute Module Interface Board and Raspberry Pi Compute Module.
POWER CONTROL	
POWER SUPPLY	Controls power to the Compute Module. Select [ON] then press SET on the remote control to power on the device. Select [OFF] then press SET on the remote control to power off the device. NOTE: The option that is highlighted under [POWER SUPPLY] when you open the [POWER CONTROL] menu indicates the current power status. If [ON] is highlighted, the power is on. If [OFF] is highlighted, the power is off.
POWER BUTTON	Performs a normal shut down of the Compute Module.
RESET	Press SET to force a shutdown and restart of the Compute Module when it does not respond to shutdown using the [POWER BUTTON] function. NOTE: This function may corrupt the data files on the Compute Module and data files on a storage device connected to the Compute Module interface card.
Connection Status*3	Shows the connection status of a Compute Module. If the status is not “Connected” then a device is not installed.
Power Status*3	Shows the operating status of the Compute Module.
Module*3	Shows information about the Compute Module Interface Board.
POWER SETTING	
AUTO POWER UP	The Compute Module will be turned on automatically when the monitor power is turned on.
AUTO SHUTDOWN*4	The Compute Module is turned off when the monitor switches into standby mode.
POWER SUPPLY OFF DELAY	This sets the time delay after the Shutdown Signal is set until the power to the Compute Module is turned off. Configure this to allow adequate time for any software to shutdown safely.
AUTO DISPLAY OFF	Allows the monitor switch into the same status when the Compute Module goes into standby or power save mode. NOTE: This function does not affect power on. Enabling this function will not cause the monitor to automatically power on when the Compute Module turns on.
OFF WARNING	Shows a warning, when shutting down the power to the Compute Module, that the device should be turned off from within the OS of the device. This message cannot be changed. This message displays when [POWER SUPPLY] is set to [OFF].
ADVANCED SETTING	
SHUTDOWN SIGNAL	Enables or disables the use of GPIO 23 to signal that power to the Compute Module will be shutting down.
IR SIGNAL	Enables or disables the forwarding of IR remote control signals.
MONITOR CONTROL	Enables or disables the internal serial connection between the monitor and the Compute Module.
WDT	Enables or disables the monitor’s built-in Watchdog Timer function for the Compute Module. When enabled, the monitor will expect to receive a periodic reset command from the Compute Module via the internal UART. If the command isn’t received for three consecutive timeout periods, the monitor will restart the Compute Module.
START UP TIME	Sets the time delay for when the monitor should start receiving WDT reset commands after the Compute Module powers up.
PERIOD TIME	Sets the maximum amount of time within which the monitor must receive WDT reset commands from the Compute Module.
SLOT POWER	Allows the monitor to supply power to an Option Board slot during power save mode or standby mode. [AUTO]: Power is continuously supplied to the Option Board slot, even during power save and standby modes. Power to the Option Board slot stops during power save and standby modes, when there is no installed device. [ON]: Power is continuously supplied to the Option Board slot, even during power save and standby modes. [OFF]: Power to the Option Board slot stops during power save and standby modes. NOTE: To activate the power management function with no signal input from a device connected to the Option Board, please set [OPTION POWER] to [AUTO] or [ON].
RESET	Resets all SLOT settings back to factory settings, except for [POWER SUPPLY] in [OPTION], [POWER SUPPLY] and [ADVANCED SETTING] in [COMPUTE MODULE].

*: This input is available when the optional Raspberry Pi Compute Module Interface Board and Raspberry Pi Compute Module are installed. See page 84.
*2: This function depends on which Option Board you are using. This function is only available when an Option Board is installed.
*3: Some Option Boards may not show it correctly.
*4: When the option board is a computer, check the settings on the computer side.

NETWORK

NETWORK MENU		
NETWORK INFORMATION		Configures the monitor's network settings either automatically or manually.
	IP SETTING	When [AUTO] is selected, the IP address is automatically obtained from the DHCP server. When [MANUAL] is selected, the network settings must be entered manually. Contact the Network Administrator for this information. NOTE: Consult your network administrator for the IP address when [AUTO] is selected for [IP SETTING].
	IP ADDRESS	Set the IP address for the monitor connected to the network when [MANUAL] is selected for [IP SETTING].
	SUBNET MASK	Set the subnet mask data for the monitor connected to the network when [MANUAL] is selected for [IP SETTING].
	DEFAULT GATEWAY	Set the default gateway for the monitor connected to the network when [MANUAL] is selected for [IP SETTING]. NOTE: Enter [0.0.0.0] to delete the setting.
	DNS	Set the IP addresses of DHCP servers. [AUTO]: The DNS server which is connected to the monitor will automatically assign its IP address. [MANUAL]: Manually enter the IP address of the DNS server which is connected to the monitor. NOTE: Consult your network administrator for the IP address when [AUTO] is selected for [DNS].
	DNS PRIMARY	Enter the primary DNS server settings of the network connected to the monitor. NOTE: Enter [0.0.0.0] to delete the setting.
	DNS SECONDARY	Enter the secondary DNS server settings of the network connected to the monitor. NOTE: Enter [0.0.0.0] to delete the setting.
	MAC ADDRESS	Shows the monitor's [MAC ADDRESS].
	EXECUTE	Executes the network information settings.
NETWORK SECURITY		Individually enable or disable the networking component for monitor functions. When performing the revision update of firmware over the network, please enable all settings.
	INTERFACE	Enables or disables the network function for controlling the monitor remotely. When [DISPLAY] is disabled, these functions do not work: External Control, Mail, Daisy chain functions, HTTP server, SNMP, Crestron, AMX, PJLink. Disabling the [COMPUTE MODULE] setting disables the ability to control network connections and monitors using [COMPUTE MODULE]. NOTE: If you disable DISPLAY, monitor control in a daisy chain configuration is not available. Please be aware of the impact in multi-monitor installations before disabling it.
	NETWORK PORT	Enables or disables the network port of the selected item. Disabling it closes the port and disables each feature.
	APPLY	Apply the network security settings.
PING		Confirm successful connection with the network by communicating with a preset IP address.
	IP ADDRESS	Sets an [IP ADDRESS] for sending [PING].
	EXECUTE	Checks a reply can be sent to the monitor or not from the [IP ADDRESS] by sending [PING].
RESET		Resets all NETWORK settings back to factory settings.

PROTECT

PROTECT MENU	
POWER SAVE SETTINGS	
POWER SAVE	Enables or disables the monitor entering power saving mode. When [ENABLE] is selected, the monitor goes into power saving mode after the period of time has passed with no input signal detected or signal loss has occurred. When the monitor is in power saving mode, the LED power indicator will change color. Refer to the Power indicator table (see page 78). When [DISABLE] is selected, the monitor doesn't go into power saving mode. Please refer to the monitor's specifications (see "M751" on page 81 and "M861" on page 82) for power consumption information. NOTE: • When the monitor is connected to a computer, the computer's display adapter may not stop sending digital data even though there is no image on-screen. If this occurs the monitor will not switch into standby mode. • If [AUTO OFF] or [CUSTOM] is selected in [HUMAN SENSING]*1, the power save function does not work. *1: This function is available only when connecting the optional sensor unit.
TIME SETTING	Sets the amount of time the monitor should wait for input signal before going into power save mode.
POWER SAVE MESSAGE	Shows a message as the monitor is entering low power mode.
QUICK START	When [ENABLE] is selected, the monitor will quickly return to the [ON] state when a signal is detected. Enabling this option increases standby power consumption.
THERMAL MANAGEMENT	
FAN CONTROL	When [AUTO] is selected, the fans will only turn on when the internal temperature reaches the temperature set at any one of the sensors in this menu. The fans will automatically turn off when the monitor is cooler. When [ON] is selected the fans are always on. The fans cannot be turned off manually. Use the ◀ or ▶ button on the remote control to adjust the maximum internal temperature the monitor can reach before the fan turns on when [AUTO] is selected.
FAN SPEED	The [FAN SPEED] can be adjusted between LOW and HIGH.
DISPLAY	
FAN STATUS	Shows the status of the monitor's internal fan.
INTERNAL TEMPERATURE	Shows the status of the internal temperature of the monitor.
SLOT	Shows the internal temperature of the Option Board.
FAN STATUS	Shows the status of the fan for the Option Board.
INTERNAL TEMPERATURE	Shows the status of the internal temperature of the Option Board.
SYSTEM FAN REQUIREMENT	Show the requirement operation from the Option Board.
OPTION	
COMPUTE MODULE	

PROTECT MENU	
SCREEN SAVER	Reduces the risk of Image Persistence. NOTE: • When the screen saver starts, the image aspect is changed to [FULL]. When the screen saver stops, the aspect will return to the current [ASPECT] setting. • When the [MOTION] option is set to [ON], these functions are not available: [MULTI PICTURE], [IMAGE FLIP] (except for [NONE]), [TILE MATRIX], STILL, [ROTATE] and POINT ZOOM. • If input is set to [DisplayPort1] and the [DisplayPort VERSION] is set to [1.4], this function is released.
MOTION	Slightly expands the screen image to the pre-set zoom level then moves the image in four directions (up, down, right, left) at the pre-set interval. Use the ◀ or ▶ button on the remote control to set the time on the [INTERVAL] slider, and the zoom percentage on the [ZOOM] slider. NOTE: If input is a DisplayPort signal 4K (60 Hz) 10bit, this function is deactivated.
POWER ON DELAY	Delays the monitor from turning on for the amount of time set when the POWER ON button is pressed.
DELAY TIME	The delay can be set between 0 and 50 seconds.
LINK TO ID	Links the [DELAY TIME] to the monitor's ID. This helps to prevent power surges that may occur if all monitors in a multi-monitor installation were to turn on at the same time. The higher the Monitor ID, the longer the delay is before the monitor powers on. For example, if the Monitor ID is 20 and the [DELAY TIME] is 5 seconds, the amount of time that passes between when the POWER ON button is pressed and when the power actually turns on is 95 seconds. This allows the 19 monitors in the multi-monitor installation to turn on with 5-second intervals between each power on. NOTE: If the [DELAY TIME] is set to 0 seconds, there will be no extended delay for [LINK TO ID]. The delay time must be 1 second or higher to delay power on.
SECURITY SETTINGS	Sets the security function.
PASSWORD	Input the current password to change the settings in this menu. The default password is 0000.
SECURE MODE	Selects when a security password is required to use the monitor.
START-UP LOCK	The password is required when powering on the monitor.
CONTROL LOCK	The password is required when pressing a button on the display's button panel or remote control.
CHANGE PASSWORD	Changes the password for the security function. NOTE: The factory preset password is [0000].
CURRENT PASSWORD	Enter the current password.
NEW PASSWORD	Enter a new password.
CONFIRM PASSWORD	Enter the new password again to confirm the password change.
LOCK SETTINGS	Prevents the monitor from being controlled by the wireless remote control, the buttons and key on the monitor, or both. Please refer to "Locking the Button Controls" (page 54 and page 55).
ALERT MAIL	When set to [ON] and the monitor is connected to a network, the monitor can send an email message when an error occurs. The email settings must be configured in the monitor's HTTP server settings for an ALERT MAIL to be sent. See page 69.
RESET	Resets all SECURITY settings back to factory setting, except for [POWER ON DELAY] and [SECURITY SETTINGS].

SYSTEM

SYSTEM MENU		
MONITOR INFORMATION		Shows the model name, serial number and firmware version of the monitor.
	MODEL	
	SERIAL	
	CARBON SAVINGS	Shows the estimated carbon saving information in kg-CO2. The carbon footprint factor in the carbon saving calculation is based on the OECD (2008 Edition).
	CARBON USAGE	Shows the estimated carbon usage information in kg-CO2. This is the arithmetic estimation, not actual measurement value. This estimation is based without any options.
	FIRMWARE	Shows the monitor's current firmware version.
	MAC ADDRESS	Shows the monitor's [MAC ADDRESS].
DATE & TIME		NOTE: If the monitor's main power has been turned off for one week, the clock function stops working. In this case, please set the [DATE & TIME] setting again.
	TIME ZONE	Set the time difference between the region where the monitor is used and the UTC (Universal Time, Coordinated).
	INTERNET TIME SERVER	Automatically sets the date and time by synchronizing with the NTP server on the network. Select [ON] then input the IP address or host name in NTP server. Select [UPDATE].
	YEAR	Sets the current year. Press the ◀ or ▶ button on the remote control to cycle to the current year. Press [UPDATE] to apply the change.
	MONTH	Sets the current month. Press the ◀ or ▶ button on the remote control to cycle to the current month. Press [UPDATE] to apply the change.
	DAY	Sets the current day of the month. Press the ◀ or ▶ button on the remote control to cycle to the current day. Press [UPDATE] to apply the change.
	TIME	Sets the current time. Highlight the hour field, then press the ◀ or ▶ button on the remote control to cycle to the current hour, then repeat this for the minutes field. Press [UPDATE] to apply the change. NOTE: • The monitor's clock is a 24-hour format. • If the monitor is at a location that is currently in Daylight Savings, set the TIME field to what the current time would be when Daylight Savings is not in effect. Then enable the [DAYLIGHT SAVING] function to have the clock automatically adjust to the current time. • If the [INTERNET TIME SERVER] is set to [ON], this function is disabled.
	CURRENT DATE TIME	Shows the current date and time. This data does not reflect changes to the Date and Time settings until SET is pressed on the remote control.
	UPDATE	Sets the date and time. When [INTERNET TIME SERVER] is set to [ON], updates the time.
DAYLIGHT SAVING		Automatically changes the real-time clock to match Daylight Savings hours. NOTE: Set the [DATE & TIME] before enabling the [DAYLIGHT SAVING] setting.
	DAYLIGHT SAVING	Automatically adjusts the current time, when Daylight Saving hours are in effect, based on the start and end dates selected in this menu.
	BEGIN MONTH/DAY/TIME	Set the month, day and time for when Daylight Saving begins.
	END MONTH/DAY/TIME	Set the month, day and time for when Daylight Saving ends.
	TIME DIFFERENCE	Set the time difference for the real-time clock adjustment. When Daylight Saving starts, this is the amount of time the real-time clock will be adjusted.
EXTERNAL CONTROL		Sets the monitor's ID number, assigns the monitor to groups.
	MONITOR ID	Sets the monitor's ID number between 1 and 100. This number is also used by the remote control when in ID mode. NOTE: It is strongly recommended so that the monitor can be individually identified and controlled.
	GROUP ID	This function assigns monitors to groups, which gives you the ability to send commands to all monitors; however, only monitors with the matching Group ID perform the command. Group IDs allow specific groups of monitors to be targeted using a single command, providing high-speed parallel operation. It is useful for scenarios such as rapid switching of video inputs or tile matrix configurations within a video wall. The [GROUP ID] function is used only via RS-232C commands from your software or control system. Monitors can be assigned to any of the 10 available Group IDs, labeled A-J. Refer to the External_Control.pdf file (see page 84) for the monitor's command codes.

SYSTEM MENU			
AUTO ID/IP SETTING			Automatically sets all of the monitor IDs and/or IP addresses in a LAN chain. Highlight [START] and press SET on the remote control to show the [AUTO ID/IP SETTING] menu. NOTE: • All changes to the [AUTO ID/IP SETTING] menu should be made on the master monitor, which is the first monitor in the LAN chain. Automatic numbering consecutively counts up by 1 starting from the master monitor. • Do not turn off the monitors' main power switch or put it into standby while [AUTO ID/IP SETTING] or [AUTO ID/IP RESET] is in progress. • Do not interrupt the monitors' LAN chain by connecting network devices between the monitors.
	SETTING ITEM		Selects which function to automatically number in the LAN chain. Each number is assigned consecutively starting from the base numbers set in this menu.
		MONITOR ID	Monitor ID numbers are automatically assigned for all monitors in the LAN chain, starting from the number set for [BASE NUMBER]. This option does not change the current IP addresses.
		IP ADDRESS	IP addresses are automatically assigned for all monitors in the LAN chain. The first three octets are set using the format in [BASE ADDRESS], the fourth octet starts at the BASE NUMBER and counts up by 1 for each subsequent monitor in the LAN chain. This option does not change the current Monitor IDs.
		ID and IP	Both the monitor ID and the IP address are assigned for all monitors in the LAN chain, starting from the [BASE NUMBER] and [BASE ADDRESS].
	BASE NUMBER		Sets the starting number for the monitor ID and/or IP address. This is the number that is assigned to the master monitor. The automatic numbering assigns consecutive numbers, starting from this number and counting up by 1, to each monitor in the LAN chain. When running AUTO ID: - Monitor numbers can be between 1-99. However, the master monitor must have a starting number low enough to include all monitors in the LAN chain. The automatic numbering counts up by 1 until it reaches 99. For example, if there are 20 monitors in the LAN chain, the BASE NUMBER must be 80 or lower. When running AUTO IP: - This is the fourth octet in the IP address. Octets one to three are set at BASE ADDRESS. The BASE NUMBER is automatically assigned to the master monitor and counts up by 1 until the end of the LAN chain. - If the master monitor is connected to a network, make sure there are no IP address conflicts before running AUTO IP. When running IP and ID: - The BASE NUMBER is the starting number for both the monitor ID and the fourth octet of the IP address. Due to this, if the master monitor is going to be connected to a network, and a block of IP addresses are not available at a number that is low enough for starting automatic ID, then it is recommended that AUTO ID and AUTO IP be run separately instead of using the grouped auto ID and IP function.
	BASE ADDRESS		Sets the first octet to the third octet for the IP addresses assigned during automatic numbering. If the master monitor is connected to a network, these fields must match the network IP numbers for the monitors to be accessed over a LAN, such as 192.168.0 or 10.0.0. The fourth octet is set at [BASE NUMBER] and counts up by 1 starting from the master monitor. NOTE: [BASE ADDRESS] is only available when [IP ADDRESS] or [ID and IP] is selected for the [SETTING ITEM].
	ID/IP SETTING START		Highlight YES then press SET on the remote control to activate the automatic number function, which first detects the number of monitors connected in the LAN chain before proceeding.

SYSTEM MENU			
		DETECTED MONITORS	Shows the number of detected monitors connected in the LAN chain. If the number is correct, highlight CONTINUE then press SET on the remote control to start automatic numbering. If the number of monitors is incorrect, make sure all monitors are powered on and verify the LAN cable connection between monitors. Then highlight RETRY and press SET to restart the monitor detection. When the [AUTO ID/IP SETTING] is complete, the status FINISH! will show on screen. NOTE: Do not turn off the monitors' main power switch or put it into standby while [AUTO ID/IP SETTING] is in progress.
	AUTO ID/IP RESET		Resets all of the monitor IDs and/or IP addresses in a LAN chain. Highlight START and press SET on the remote control to show the [AUTO ID/IP RESET] menu.
		RESET ITEM	Select which item to reset for all monitors in the LAN chain.
		ID/IP RESET START	[MONITOR ID] will change all of the monitor IDs to 1 (default setting). [IP ADDRESS] will change all of the monitor IP addresses back to their previous setting. [ID and IP] will reset both the monitor IDs and IP addresses. Highlight the field [PRESS (SET) TO EXECUTE] then press SET.
	DETECTED MONITORS		Shows the number of detected monitors.
	COMMAND TRANSFER		When [ON] is selected, commands sent to the master monitor are transferred to the other monitors in the LAN chain.
LANGUAGE			Select the language used by the OSD.
OSD			
	OSD TIME		Turns off the OSD after a period of inactivity. The preset choices are 10-240 seconds.
	OSD POSITION		Determines the location where the OSD appears on the screen.
	OSD SIZE		Change the size of the OSD on the screen.
	INFORMATION OSD		Selects whether or not to automatically show information about the monitor when it powers on, changes input, or the current input signal changes. The information includes the current input, audio source, aspect ratio, resolution, and refresh rate. The monitor's ID and IP address are also shown unless their setting is OFF. Note that the information OSD is also displayed when pressing the DISPLAY button on the remote control. The remote control function cannot be turned off.
	COMMUNICATION INFO.		Selects whether or not to show the [MONITOR ID] and [IP ADDRESS] when the [INFORMATION OSD] is [ON] or when pressing the DISPLAY button on the remote control. The information is selected in [EXTERNAL CONTROL] or [NETWORK INFORMATION] in [NETWORK].
	OSD TRANSPARENCY		Makes the OSD partially transparent.
	OSD ROTATION		Changes the OSD orientation between landscape and portrait.
		AUTO	The G-sensor detects the monitor's direction and shows the OSD in the appropriate orientation.
		LANDSCAPE	Shows the OSD in landscape orientation.
		PORTRAIT	Shows the OSD in portrait orientation.
	KEY GUIDE		Shows the monitor's button controls Key Guide when open the OSD Menu. The Key Guide is aligned to the monitor's button control panel and does not move if the OSD POSITION changes. It is a visual guide to indicate the position of the buttons so that features can be easily adjusted when not using a remote control. NOTE: This function is not available when [OSD FLIP] is [ON].

SYSTEM MENU	
CLONE SETTING	Allows for exporting and importing some of the OSD menu settings between monitors.
CLONE SETTING	Selects the option to import or export the OSD menu settings. USB WRITE: Exports the monitor settings to a connected USB storage device. USB READ: Imports the monitor settings from a connected USB storage device. LAN: Exports the monitor settings to another monitor via a LAN cable. NOTE: When importing settings using a USB storage device: • Format the USB storage device for FAT32. • Connect the USB storage device to the USB service port (See page 33).
TARGET INPUT	Selects to import settings for [ALL] inputs or only the [CURRENT] input. Individually select each OSD menu function's settings to import. The settings are imported from the selected [CLONE SETTING] device. Option items are below. NOTE: • These options are disabled if the selected [CLONE SETTING] is [USB WRITE]. • The [HTTP] option is for copying the monitor's web interface settings. Only settings that are not monitor specific are exported and imported during this process.
INPUT	
PICTURE	
AUDIO	
SCHEDULE	
SLOT	
NETWORK	
PROTECT	
SYSTEM	
HTTP	
COPY START	Highlight [PRESS (SET) TO EXECUTE] then press SET to initiate import or export of the OSD menu settings. This field is enabled when: - [CLONE SETTING] is set to [USB WRITE]. Pressing SET will initiate exporting the OSD menu settings to an attached USB storage device. - [CLONE SETTING] is set to [USB READ] or [LAN] and at least one OSD menu option under [TARGET INPUT] is selected. Pressing SET will initiate importing the selected OSD menu settings to the selected [TARGET INPUT]. NOTE: Once this process is started it cannot be undone.
POWER INDICATOR	Turns [OFF] or [ON] the LED that indicates the monitor is powered on and in active mode. The monitor's power LED will not glow when this setting is [OFF].
MUTE SETTING	Allows you to mute the monitor's audio and video output. AUDIO: Mutes the audio output when the remote control's MUTE button is pressed. VIDEO: Mutes the video output when the remote control's MUTE button is pressed. AUDIO & VIDEO: Mutes the audio and video output when the remote control's MUTE button is pressed. NOTE: The MUTE setting is released in the following cases: • Change the [INPUT]. • Turn off/on the monitor by the main power switch. • Turn off/on the monitor with the ⏻ button on the remote control or the main unit. • Return from power save. • Change the [MUTE SETTING] setting. • Change the [AUDIO MODE] setting. • Volume is changed with the remote control or the main unit key. • Video signal (resolution/scanning frequency) is changed.

SYSTEM MENU		
USB		
	PC SOURCE	Select which device you want to use to control the monitor and a device connected to USB-A. AUTO: Automatically selects the PC SOURCE type. EXTERNAL PC: Select this option to use a PC when it is connected to the USB2 port. OPTION: Select this option to use an Option board. If an option board is not installed, OPTION will not be available as a selection. COMPUTE MODULE: Select this option when a Raspberry Pi Compute Module and Interface Board is installed. If a Raspberry Pi Compute Module is not installed, COMPUTE MODULE will not be available as a selection. NOTE: • The options available depends on if internal PC sources are installed in the monitor or a device is connected to USB-B. • Internal USB upstream hub switches to a device connected to USB-B when [EXTERNAL PC] is set.
	USB POWER	Supplies power to the USB Service (2A) port. Select [ON] to supply power during standby. NOTE: Power consumption by devices connected to this port depends on the USB devices.
	EXTERNAL CONTROL	Enable to allow the monitor to be controlled by a device connected to the USB-B port.
UPDATE FIRMWARE		Updates the firmware by connecting the USB storage device (FAT32) that stores the FIRMWARE image file (PAC file) to the monitor.
RESET		Resets all SYSTEM settings back to factory settings, except for [LANGUAGE], [OSD ROTATION], [KEY GUIDE], [DATE & TIME] and [DAYLIGHT SAVING].
FACTORY RESET		
	RESET	All items are returned to factory shipment state.

Appendix D Manufacturer's Recycling and Energy Information

This Chapter Includes:

- "Disposing of your old NEC product" on page 110
- "Energy Saving" on page 110
- "WEEE Mark (European Directive 2012/19/EU and amendments)" on page 110

We are strongly committed to environmental protection and sees recycling as one of the company's top priorities in trying to minimize the burden placed on the environment. We are engaged in developing environmentally friendly products, and always strive to help define and comply with the latest independent standards from agencies such as ISO (International Organization for Standardization) and TCO (Swedish Trades Union).

Disposing of your old NEC product

The aim of recycling is to gain an environmental benefit by means of re-use, upgrading, reconditioning or reclamation of material. Dedicated recycling sites ensure that environmentally harmful components are properly handled and securely disposed. To ensure the best recycling of our products, we offer a variety of recycling procedures and gives advice on how to handle the product in an environmentally sensitive way, once it has reached the end of its life.

All required information concerning the disposal of the product and country-specific information on recycling facilities can be found on our following websites:

https://www.sharpnecdisplays.eu/p/greenvision/en/greenvision.xhtml (in Europe)

https://www.sharp-nec-displays.com/jp/ (in Japan)

https://www.sharpnecdisplays.us/ (in USA).

Energy Saving

This monitor features an advanced energy saving capability. When a Display Power Management signal is sent to the monitor, the Energy Saving mode is activated. The monitor enters a single Energy Saving mode.

For additional information visit:

https://www.sharpnecdisplays.us/ (in USA)

https://www.sharpnecdisplays.eu/p/hq/en/home.xhtml (in Europe)

https://www.sharp-nec-displays.com/global/index.html (Global)

WEEE Mark (European Directive 2012/19/EU and amendments)

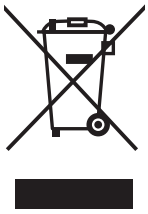

Disposing of your used product: In the European Union

EU-wide legislation as implemented in each Member State requires that used electrical and electronic products carrying the mark (left) must be disposed of separately from normal household waste. This includes monitors and electrical accessories, such as signal cables or power cords. When you dispose of such products, please follow the guidance of your local authority or ask the shop where you purchased the product, or if applicable, follow applicable legislation or agreement you may have. The mark on electrical and electronic products may only apply to the current European Union Member States.

Outside the European Union

If you wish to dispose of used electrical and electronic products outside the European Union, please contact your local authority and ask for the correct method of disposal.

For EU: The crossed-out wheeled bin implies that used batteries should not be put to the general household waste! There is a separate collection system for used batteries, to allow proper treatment and recycling in accordance with legislation.

According to EU directive 2006/66/EC and amendments, the battery can't be disposed improperly. The battery shall be separated to collect by local service.

Rev. 2