StaySharp™ Plus

THE WORLD'S
MOST ADVANCED
REEL MOWERS™

FISKARS®

FISKARS®

THE WORLD'S MOST ADVANCED REEL MOWERS™

StaySharp™ Plus (17")

Model Number: 1015649

Fill in the following information for easy reference.

Serial Number:_____
(located on the lower back portion of the mower)

Date of Purchase:_____

Contents:

Safety Information 3

StaySharp™ Plus Technologies 4

Mower Anatomy 5

Assembly 6–7

Adjusting Your Mower 8–9

Checking Cutting Performance 10–12

Using Your Mower 13–14

Troubleshooting 15

Care and Maintenance 16–17

LIMITED TWO-YEAR WARRANTY
Fiskars Brands, Inc. warrants to the original consumer consumer purchaser that its Lawn Mower products are free from defects in materials and workmanship appearing under normal use within two (2) years after the date of purchase. This warranty does not cover damage to Lawn Mower products caused by abuse, acts of God, your failure to follow product instructions, mishandling or unauthorized repair. THIS WARRANTY IS IN LIEU OF ALL OTHER EXPRESS WARRANTIES; AND ANY IMPLIED CONDITIONS OR WARRANTIES, STATUTORY OR OTHERWISE, INCLUDING BUT NOT LIMITED TO ANY IMPLIED CONDITION OR WARRANTY OF MERCHANTABILITY OR FITNESS FOR PARTICULAR PURPOSE, ARE LIMITED TO THE DURATION OF THIS WARRANTY. IN NO EVENT WILL FISKARS BRANDS, INC. BE LIABLE FOR ANY INCIDENTAL OR CONSEQUENTIAL DAMAGES. Some provinces do not allow limitations on implied conditions and warranties and/or the exclusion or limitation of incidental or consequential damages, so the above limitation and/or the above exclusion may not apply to you. This warranty gives you specific legal rights, and you may also have other rights which vary from province to province. As its sole responsibility and your sole remedy for any warranted defect, Fiskars Brands, Inc. will replace any defective part of the Lawn Mower, containing a warranted defect, free of charge, with proof of purchase and notification within a reasonable period of time (but no longer than 6 months) following the discovery of such defect. This warranty is not transferable.

Before assembling or using the mower, read through the entire manual and fully understand the safety information.

⚠ CAUTION Safety Information

Do not use mower if in poor health.

Do not operate with missing or damaged guards.

Always wear safety glasses, gloves and closed-toed shoes when operating and maintaining your mower.

Never place hands, fingers or feet in the reel. When the reel is spinning, it will cut.

Always remove debris from path of mower.

Always have sound footing when using mower, especially on wet grass or on slopes (inclines).

Use safe lifting practices when moving mower.

Do not allow children under 12 to use mower.

Do not operate around children, other people or pets.

Do not run while using mower.

Do not use mower on surfaces other than grass.

Make sure mower is in safe operating condition by following the tips outlined in this manual.

Do not use mower if it becomes damaged.

The user is responsible of any third parties in the working area

Congratulations!

You are now the owner of one of The World's Most Advanced Reel Mowers™. If you have used a reel mower before, you will immediately appreciate the advantages offered by your new reel mower. If this is your first reel mower, you will likely require a short transition period as you adjust to using a reel mower. For more information on how to enjoy all the benefits of your reel mower, see *Using Your Mower* on page 13. Also, remember that Fiskars' customer service team and website are both available to you should you need additional help.

Questions? Suggestions?

Don't return to the store. We're here to help.

Visit our website at **fiskars.com**

Save this manual for future reference.

StaySharp™ Cutting System, Fiskars Exclusive

What is it? Fiskars' exclusive StaySharp™ Cutting System uses precision-ground, hardened steel blades engineered to efficiently cut grass without actually touching, greatly reducing friction and blade wear.

How is it different? Standard reel mowers rely on contact between the cutting reel and stationary blade for cutting. This steel-on-steel contact creates friction and causes blade wear. As a result, the blades on standard reel mowers dull quickly and require costly annual sharpening to maintain peak performance.

Why is it important? Since the StaySharp™ Cutting System cuts grass without the blades touching, friction and blade wear are virtually eliminated. As a result, long-lasting performance is maintained without the cost and inconvenience of annual blade sharpening.

InertiaDrive™ Reel, Patent Pending

What is it? Fiskars' patent-pending InertiaDrive™ Reel combines a large-diameter cutting reel and thick blades to store energy (like a flywheel) until a burst of extra cutting power is needed.

How is it different? Standard reel mowers use small-diameter cutting reels with thin blades. These reels and mowers lack cutting power and frequently jam when cutting small twigs, weeds or dense grass. When this happens the cutting reel seizes, completely stopping the mower. The obstruction must be removed before mowing can resume.

Why is it important? InertiaDrive™ Reel uses the mower's large-diameter cutting reel and heavy blades to store energy (like a flywheel) until a burst of extra cutting power is needed. When a tough spot is encountered, the InertiaDrive™ Reel delivers 75% more cutting energy to power through without jamming, providing a superior cut without interruption.

Forward Reel Design

What is it? Fiskars' forward reel design with a unique grass discharge chute throws clippings forward.

How is it different? Standard reel mowers feature rear grass discharge, which means your shoes get covered in messy grass clippings.

Why is it important? Fiskars' forward reel design with a unique grass discharge chute throws clippings forward cleanly, away from your feet.

Cuts All Grass Types

What is it? StaySharp™ Plus Reel Mower offers a combination of advanced technologies to cut all residential grass types easily.

How is it different? Standard reel mowers struggle to cut certain types of residential grass, jamming or leaving uncut blades of grass.

Why is it important? StaySharp™ Plus Reel Mower cuts all types of residential grass easily, even tough southern varieties.

40% Easier to Push Most reel mowers can be difficult to push — especially in longer grass. The advanced technologies combine to reduce push force by 40%.

Key Components

Being familiar with the parts and technologies of your reel mower will make assembly and maintenance much easier. Review the components shown on this illustration and refer to it as needed when following the steps outlined in this manual.

Note: If a clear reel cover is present, remove before use.

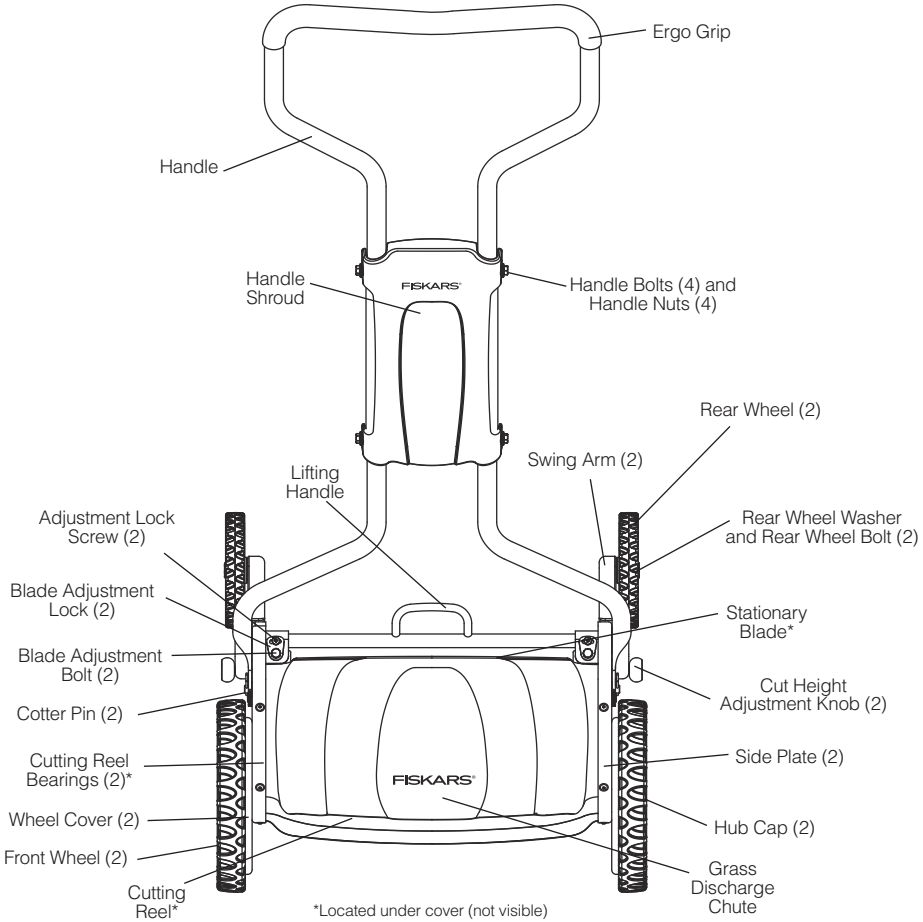

Tools required for assembly:

The only tools required for assembly are 11 mm and 18 mm wrenches or sockets.

The following parts are included in the hardware bag (bagged separately)**:**

Handle Assembly
Handle nuts (4)
Handle bolts (4)

Rear Wheel Assembly (next page)
Rear wheels (2)
Rear wheel bolts (2)
Rear wheel washers (2)

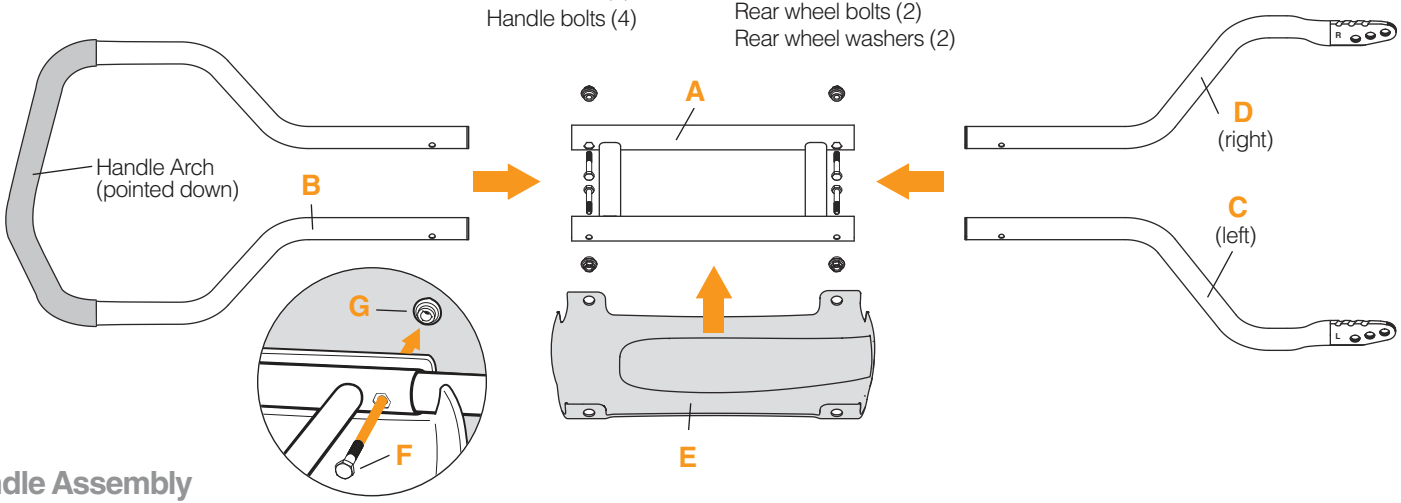

Handle Assembly

1. Lay out the handle parts upside down as shown above for easier assembly. Note the center handle section **(A)** is symmetrical, so it can be laid down on either side.

2. Make sure the arch of the upper handle section **(B)** is facing down. Then insert the free ends of the upper handle section **(B)** into the center handle section **(A)**. Roughly align the holes.

3. Make sure the lower handle sections, **(C)** and **(D)**, are laid out with the notches up. Then insert the left lower handle section (marked with “L”) **(C)** and the right lower handle section (marked with “R”) **(D)** into the center handle section **(A)** as shown. Roughly align the holes.

4. Slide handle shroud **(E)** into place from below with the Fiskars logo facing down and toward the upper handle section **(B)**.

5. Align holes in handle sections and shroud **(E)**. Slide a handle bolt **(F)** through from the inside, so that the end comes through the hole of the handle shroud. Repeat for the remaining three handle bolts.

6. Align the hex-shaped bolt head with the hex-shaped cutout in the center handle section **(A)**, then hand-tighten a handle nut **(G)** onto the bolt. Repeat for the remaining three handle nuts.

7. Using an 11 mm wrench or socket, tighten the four handle nuts **(G)** until they are snug.

Rear Wheel Assembly

1. Assemble the rear wheel bolt **(A)** through the rear wheel washer **(B)** and insert through the rear wheel **(C)**.

2. Screw the bolt assembly into the swing arm **(D)** and tighten firmly using the 18 mm wrench or socket.

3. Repeat for the other rear wheel.

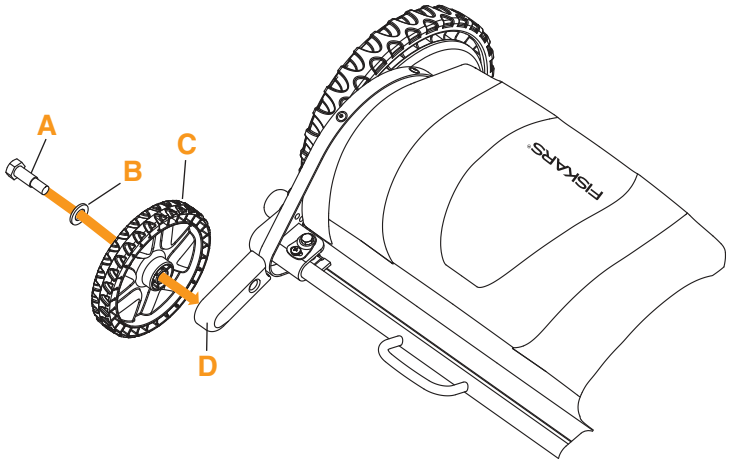

Attaching the Handle

1. Remove the two cotter pins **(A)** from the handle mount pegs **(B)**.

2. Slide hole number 2 **(C)** of the handle onto the handle mount pegs **(B).** Some force may be needed to separate the handle legs so they fit over the pegs. Release the handle until it rests on the handle stop peg **(D)**.

3. Insert the cotter pins **(A)** to secure the handle.

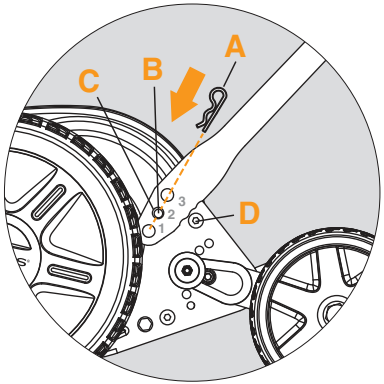

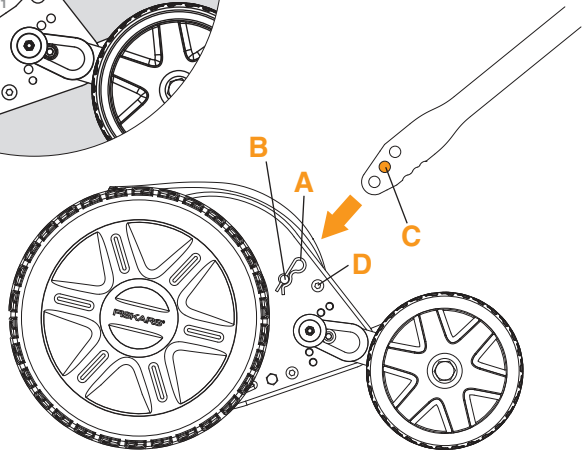

Cut Height Adjustment

1. Standing to the rear of the mower, place your left hand on the lifting handle **(A)** to support the mower during adjustment.

2. Use your right hand to pull the cut height adjustment knob **(B)** away from the mower and move to your desired cut height. Then release the knob, making sure it snaps back into place.

3. Repeat the process on the other side, reversing hand placement, making sure both wheels are at the same setting. Failure to align the wheels will result in an uneven cut.

Note: The factory-set cut height range is 1.5"–3.5". To raise your cutting height to 2"–4" range, refer to *Cut Height Range Adjustment* on page 9.

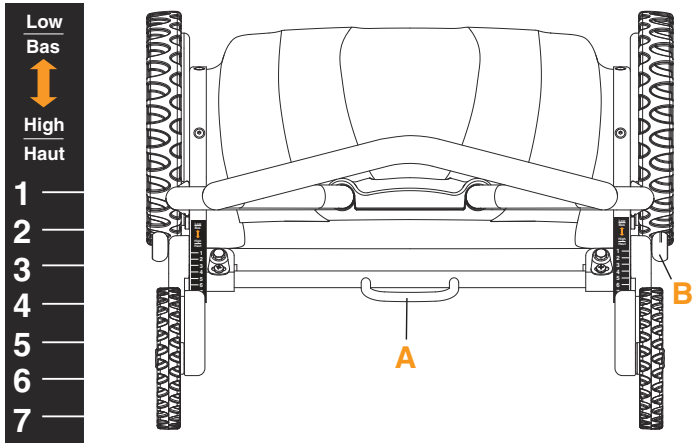

Handle Height Adjustment

IMPORTANT: To maximize comfort and control, your mower features a height-adjustable handle. The handle is designed to "float" between its bottom and in-use positions. The bottom position is used to pivot through turns. The in-use position should be 6"–10" above the bottom position. Lifting the handle in this fashion keeps the front end from rising off the ground to ensure an even cut. **Since selecting the correct handle height is extremely important, it is worth the trial and error that may be required to find the ideal height.**

1. For people of average height, handle hole 2 can be used for the middle cut-height settings, which are the most common. If you are tall or plan to use the lower cut height settings, consider using hole 3. If you are short or plan to use the higher cut height settings, consider using hole 1.

2. Before adjusting the handle height, it is important to set the mower to the cut height that you will use most frequently (see *Cut Height Adjustment*).

3. Push the mower forward several feet, then turn it around as you would at the end of a mowing run. If you can push the mower comfortably without the front end rising and if you can turn the mower without hunching over, you have the handle set properly.

- If the front end rises, you have the handle set too high. Lower the handle by using hole 1.
- If you have to hunch over a great deal to turn, you have the handle set too low. Raise the handle by using hole 3.

3. As the cut height is adjusted, the handle's bottom position will also move. Consequently, you may need to adjust the handle height if you drastically change the cut height. Adjustment may also be needed if you share mowing duties with someone else.

Cut Height Range Adjustment

Note: The factory-set cut height range is 1.5"–3.5". To raise your cutting height to 2"–4" range, follow these steps.

⚠**WARNING:** The mower blades are sharp. This adjustment requires working in close proximity to the cutting reel blades. Leather gloves should be worn at all times.

The tools required are a 17 mm wrench, an 8 mm Allen wrench and a flathead screwdriver.

1. Turn the mower upside down so it rests on the shroud. Set the mower to the lowest cut height setting to move the rear wheels out of the way.

2. Starting on either side, use the flathead screwdriver to carefully pry off the orange hubcap **(A)**.

3. Remove the axle bolt **(B)** using the 17 mm wrench to hold the nut **(C)** on the inside of the side plate **(D)** while turning the axle bolt **(B)** counterclockwise with the 8 mm Allen wrench on the outside of the wheel.

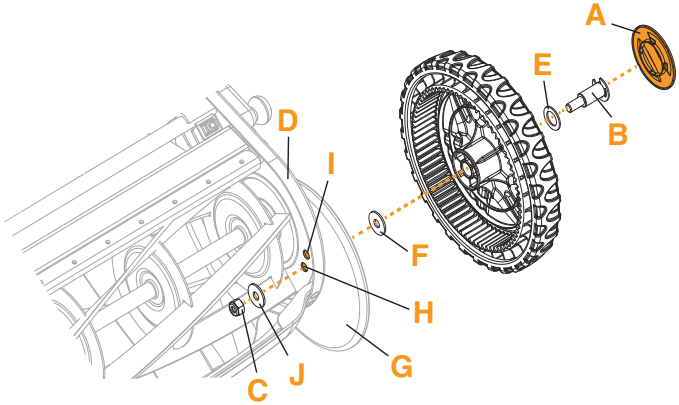

4. With the wheel removed, rotate the plastic wheel cover **(G)** from the upper hole **(H)** to the lower hole **(I)** on the side plate **(D)**. Moving to the lower hole **(I)** provides the higher cut height range (2"–4"). Moving to the higher hole **(H)** provides the lower cut height range (1.5"–3.5").

5. Organize the wheel parts for reassembly.

   a. Assemble the axle bolt **(B)** and washer **(E)** and insert through the outside of the wheel.

   b. Place the other washer **(F)** on the axle bolt on the inside of the wheel.

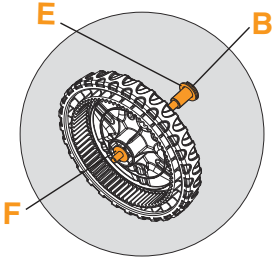

6. Position the wheel assembly from Step 5 through the lower hole **(H)**. Carefully replace the washer **(J)** on the axle bolt **(B)** and hand-tighten the nut **(C)** from inside the side plate **(D)**.

7. Hold the nut **(C)** in place with the 17 mm wrench and firmly re-tighten the axle bolt **(B)** using the 8 mm Allen wrench.

8. Press the orange hubcap on to snap it back into place.

9. Repeat on other side.

IMPORTANT: The StaySharp™ Cutting System is engineered to cut grass without contact between the blades. This cutting system was precision-set during assembly. However, since slippage may occur during shipping, handling or use, it is very important to check the cutting performance prior to first use and periodically thereafter. Since slippage can occur in two directions, two checks are required to evaluate cutting performance — both checks need to be performed on both the left and right side of the mower. **Checking the cutting performance and adjusting it as needed is the most important thing you can do to ensure that your mower always performs optimally.**

Preparation

You'll need several 1" x 8" strips of standard printer paper (not newspaper) and a pair of work gloves.

WARNING: The mower blades are sharp. Wear gloves when performing this procedure, and keep fingers away from the interface between the cutting reel blades and stationary blade.

Check #1: Do the Blades Make Contact?

1. Ensure that the mower cannot roll forward by positioning it on a firm, level surface with blocks in front of the rear wheels. Then raise the mower to the highest position to improve access.

2. To check if the blades make contact with the mower resting on all four wheels, slowly turn the cutting reel **(A)** forward, one blade at a time, through a full rotation or two. If you hear scraping or feel resistance, skip the remainder of this section and proceed to *Adjusting the Blades* on page 11.

ATTENTION: If the cutting reel and stationary blade make contact, the mower will be difficult to push and may dull the blades.

Check #2: Do the Blades Cut Properly?

1. Turn the mower onto its side.

2. To check if the blades cut properly, you will need to check the blades on both ends of the mower. Starting with the end closest to the ground, feed a strip of paper between a cutting reel blade **(A)** and the stationary blade **(B)**, keeping the paper flush against the side **(C)** of the stationary blade **(B)**. About half an inch of the strip should be visible beyond the stationary blade.

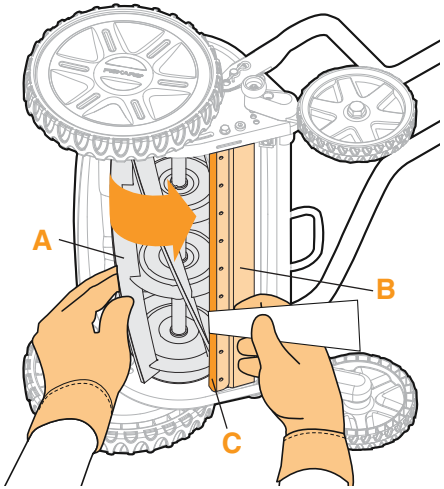

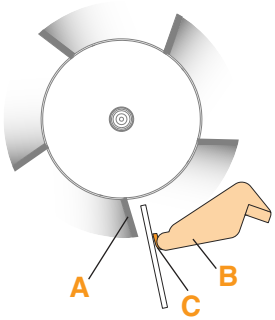

⚠**WARNING:** Keep your fingers away from the cutting area; they should be to the right of the stationary blade.

3. Slowly rotate the cutting reel **(A)** toward the stationary blade **(B)**, observing whether the paper is cut as the first cutting reel blade passes.

4. Continue to feed the paper into the reel horizontally half an inch at a time to check the other blades.

5. Now check the opposite end of the reel by sliding the paper to the end farthest from the ground and checking if the blades cut properly on that end.

6. If most of the blades cut on both ends, the cutting system is set correctly. If all or most of the blades do not cut on one or both ends, the cutting system needs to be adjusted. Proceed to *Adjusting the Blades* below.

ATTENTION: Failure to correct an improperly set cutting system will result in poor cutting performance and uncut blades of grass.

Adjusting the Blades

The tools required are an 11 mm wrench or socket and a Phillips screwdriver.

1. With the mower resting on all four wheels, use the Phillips screwdriver to loosen the adjustment lock screw **(C)** on both sides, then lift the adjustment locks **(D)** over both adjustment bolts.

2. Turn the mower onto its side.

3. With the adjustment locks **(D)** lifted and turned to the side, adjust the stationary blade by turning the adjustment bolts **(E)** as described below.

ATTENTION: When making adjustments, it is **very** important to turn **both** adjustment bolts **(E)** with the same small adjustments (less than 1/8 of a turn at a time) so the stationary blade is supported evenly on both sides. Never turn one adjustment bolt without also turning the other the same amount. If one bolt is turned significantly more than the other, one bolt will become loose and be unable to properly support the stationary blade. If this occurs, simply tighten the loose bolt so that both bolts have the same tension.

- **If the blades did not cut paper:**
  Move the whole stationary blade closer to the cutting reel by making small counter-clockwise turns on both ends until the blades just barely come into contact. Then make small clockwise adjustments on either end until the blades no longer touch. **Be sure to turn both bolts equally.**

- **If the blades made contact:**
  Move the whole stationary blade away from the cutting reel by making small clockwise turns on both ends, stopping as soon as the blades lose contact. **Be sure to turn both bolts equally.** Then test that most of the blades cut paper on both ends.

4. After the blades are properly adjusted, replace the adjustment locks and firmly tighten the screws.

ATTENTION: If you have followed the directions for adjusting the blades and are still not cutting paper on one or both sides of the mower, choose the setting that maximizes the number of blades that cut paper and take the mower out for a test pass. If the mower cuts to your satisfaction and the blades do not make contact, you have adjusted the mower correctly. If the mower does not cut to your satisfaction, the stationary blade and cutting reel may be out of parallel alignment. If this is the case, proceed to Aligning the *Cutting Reel and Stationary Blade* on page 12.

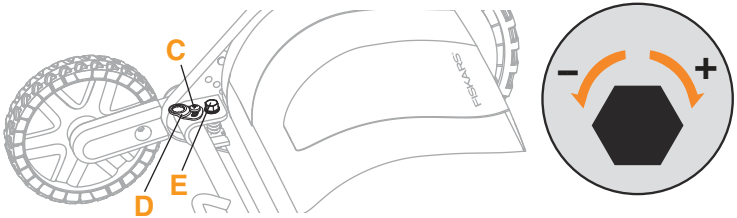

Aligning the Cutting Reel and Stationary Blade

The tools required are an 11 mm wrench or socket, a Phillips screwdriver, and a nail or small screwdriver.

1. Rest the mower on all four wheels. Use a Phillips screwdriver to loosen the adjustment lock screws on both sides, then lift the adjustment locks over both adjustment bolts as shown in *Adjusting the Blades* on page 11.

2. Turn the mower onto its right side and loosen (but not remove) the alignment cam locking bolt **(A)** using an 11 mm wrench or socket.

3. Locate the alignment cam adjustment window **(B)** on the bottom of the left side plate. Through the window you will see the alignment cam **(C)**, a round disc with holes in it.

4. You will need to adjust both the alignment cam **(C)** and the blade adjustment bolts to realign the stationary blade with the cutting reel.

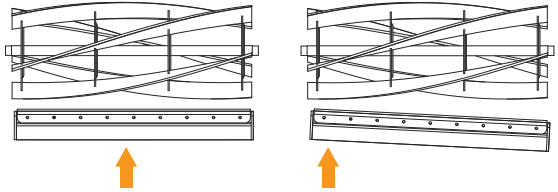

Blade adjustment moves the entire stationary blade toward and away from the cutting reel.

Cam adjustment changes the angle between the stationary blade and cutting reel.

5. To adjust the alignment cam **(C)**, insert a nail or small screwdriver into one of the holes and slowly rotate it back and forth to determine which direction brings the stationary blade back into parallel alignment with the cutting reel.

Note: The movement of the stationary blade will be very slight, so watch the adjustment closely.

6. You may initially need to move the stationary blade away from the cutting reel by turning the blade adjustment bolts clockwise to create room for the stationary blade to move into the proper position.

7. As you make adjustments, periodically check cutting performance as described in *Checking Cutting Performance* on page 10. When most of the blades cut paper on both ends without making contact, hold the alignment cam **(C)** in place using the nail or small screwdriver and re-tighten the cam locking bolt **(A)**.

8. Replace the adjustment locks and firmly tighten the adjustment lock screws.

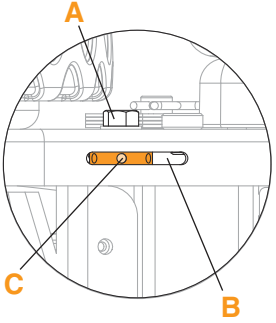

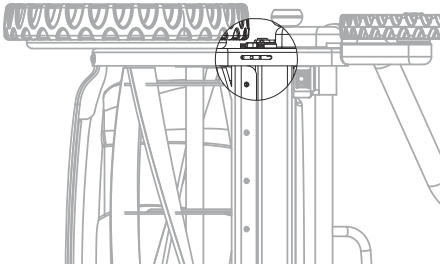

Before assembling or using the mower, read through the entire manual and fully understand the safety information.

⚠ CAUTION Safety Information

Do not use mower if in poor health.

Do not operate with missing or damaged guards.

Always wear safety glasses, gloves and closed-toed shoes when operating and maintaining your mower.

Never place hands, fingers or feet in the reel. When the reel is spinning, it will cut.

Always remove debris from path of mower.

Always have sound footing when using mower, especially on wet grass or on slopes (inclines).

Use safe lifting practices when moving mower.

Do not allow children under 12 to use mower.

Do not operate around children, other people or pets.

Do not run while using mower.

Do not use mower on surfaces other than grass.

Make sure mower is in safe operating condition by following the tips outlined in this manual.

Do not use mower if it becomes damaged.

The user is responsible of any third parties in the working area

Your reel mower has been designed and engineered to deliver best-in-class cutting performance and a superior mowing experience. However, there are several basic things you can do when mowing that will greatly impact both your mower's performance and your mowing experience. If you have used a reel mower before, you will immediately appreciate the advantages offered by the mower's advanced cutting technologies and design features. If this is your first reel mower, you will likely require a short transition period as you adjust your mowing habits to maximize efficiency and effectiveness. The information below will help both experienced and new reel mower users enjoy all the benefits of the reel mower. Also, remember that Fiskars customer service team and website are both available to you should you need additional help.

Mowing Tips

For a healthy lawn, cut off no more than 1/3 of the grass length. To maintain a healthy lawn and eliminate the mess created by very long grass clippings, cut no more than 1/3 of the grass length at a time. If more than 1/3 of the length is removed, root growth will be impaired and the grass will be stressed, making your lawn susceptible to weed invasion, disease and poor appearance. If your grass gets too high, cut off 1/3 of the length, wait a couple days, and then cut off another 1/3.

To prevent mower damage, clear the mowing area of debris in advance. Before starting, inspect the area to be mowed and remove stones, medium-sized or larger sticks, trash and other debris.

If you hit hard debris, stop and inspect the blades. If you strike a stone, large stick or other hard object with the cutting blades, stop mowing immediately and check for a jam or damage. If the blades are damaged, pull the mower backward to an appropriate work area and follow the instructions in *Care and Maintenance* on page 17. Continuing to mow with damaged blades may make repair impossible.

To maximize cutting power, walk briskly. The cutting power of the InertiaDrive™ Reel increases with the speed of the mower. This means that the faster you walk, the better your mower will cut. While it is not necessary to run, if you're used to mowing at a very leisurely pace, try walking just a little more quickly.

For efficient mowing, cut your lawn in long, straight lines. Since reel mowers only cut grass when they are moving, lay out your mowing pattern to maximize the amount of long, straight runs and minimize starts and stops. Overlapping wheel tracks will ensure a complete and uniform cut.

Precut a turnaround zone to ease turns against obstructions. If any mowing run ends against an obstruction (garden, foundation, fence, etc.), begin by making one or two mowing passes along the obstruction to provide a turnaround zone.

***Scotts® Lawns: Your Guide to a Beautiful Yard, Second Edition,* recommends the following cut heights:**

Cool Season Grasses

Bluegrasses (2"–4")
Fescue (2"–4")
Ryegrass (2"–4")

Warm Season Grasses

Bermuda (½"–2")
St. Augustine (2"–4")
Zoysia (¾"–2")
Bahia (2"–4")

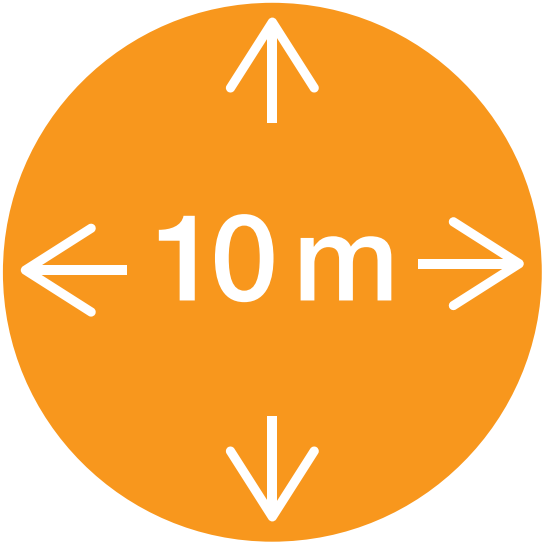

In the working area of the mower the user is responsible to others

Problem: The mower leaves some uncut blades of grass.

Is your grass very long or are tall weeds present? If your grass is over 6" long or tall weeds are present, they may be knocked down by the front of the mower. If this happens, either pull these long stragglers by hand or make a second mowing pass to cut them. To prevent this entirely, never let your grass grow longer than 6".

Does the front of the mower rise off the ground? If the adjustable handle is set too high, the force you exert when pushing the mower may cause the front wheels to rise up off the ground, resulting in uneven cutting. If this happens, refer to *Adjusting Your Mower* on page 8.

Are the blades set improperly? While your mower's cutting system was precision-set during assembly, it is possible that some slippage may occur during shipping, handling and operation. To check if the cutting system is set properly, refer to *Checking Cutting Performance* on page 10.

Problem: The mower is hard to push or the reel doesn't spin freely.

Are you trying to cut too much grass? The mower may become hard to push or even clog if the cut height is set too low for the length of the grass being cut. If this is the case, readjust the cut height so that you are cutting no more than 1/3 of the length of the grass.

Is the mower awkward to push? If the adjustable handle is set too high, it may feel awkward while pushing. If this happens, refer to *Adjusting Your Mower* on page 8 for instructions on lowering the handle.

Is the drive train obstructed? If you find that your mower becomes harder to push, examine the ends of the reel and the wheels to see if grass clippings or other debris have caused a jam. If an obstruction is present, clear it with a long bristled brush or soft tool.

Are the blades making contact? While your mower's cutting system was precision-set during assembly, it is possible that some slippage may occur during shipping, handling and operation. To check if the cutting gap is set properly, refer to *Checking Cutting Performance* on page 11.

Problem: Turning the mower is difficult or requires stooping.

Is the handle height set properly? If the adjustable handle is set too low, turning your mower may require you to stoop over. If this happens, refer to *Adjusting Your Mower* on page 8 for instructions on raising the handle.

Problem: The mower makes a scraping or tinging noise.

Is the cutting reel or stationary blade damaged? While your mower has hardened blades, blade damage can still occur if rocks, concrete edges or other hard debris are struck. If this happens, the damaged area of the blade may cause a high-pitched sound when it passes the other blade. See *Care and Maintenance* on page 16 for additional details.

Are the blades making contact? While your mower's cutting system was precision-set during assembly, it is possible that some slippage may occur during shipping, handling and operation. To check if the cutting gap is set properly, refer to *Checking Cutting Performance* on page 11.

IMPORTANT: To ensure long-lasting performance, protect your mower from impact during use and storage, keep it clean and dry and practice regular maintenance as follows.

General Maintenance

Keep your mower dry to prevent rust. Your reel mower will perform better for longer if it is kept dry. The precision-ground blade edges of the cutting reel, stationary blade, the bearings that carry the cutting reel, and the rear axle are most vulnerable to rust. If your mower does get wet, dry it off with a towel and spray it with a rust preventative as soon as possible.

ATTENTION: Do not use solvents such as mineral spirits or kerosene to clean your reel mower. They will damage the plastic.

Hint: It is recommended that a silicone-based lubricant be used. A lubricant that leaves a dry film instead of an oily or tacky surface is recommended in order to keep dirt, dust and grass clippings from sticking to the reel blades.

Keep your mower clean to eliminate potential jams and moisture that could cause rust. Your reel mower will last longer and look better if it is kept clean. After mowing, use a broom or long-bristled brush to clean any grass clippings or other loose debris from the mower — especially around the cutting reel and the bottom of the drive system cover. Removing grass clippings prevents cutting and drive system jams and eliminates trapped moisture that could cause rust.

ATTENTION: Do not use a garden hose to wash your mower. Storing the mower wet will cause rust to form.

Lubricate moving parts at least once a season and prior to winter storage to maintain peak performance. Your mower will push easier and last longer if all moving parts are lubricated periodically. It is also recommended that lubrication be applied any time the mower gets wet.

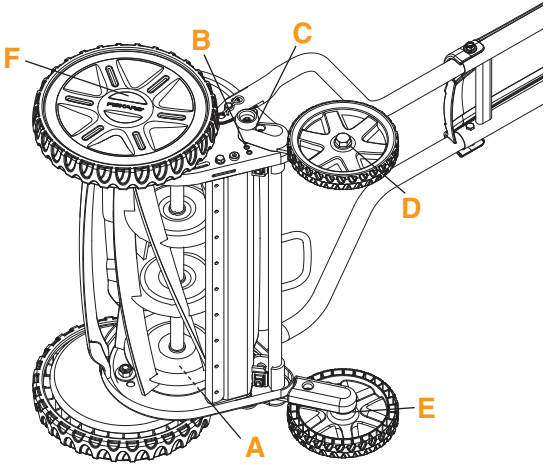

Cutting Reel Bearings **(A)**: Spray lubricant on both ends of the cutting reel shaft where the grey cutting reel meets the black side plate.

Cut-height Adjustment: Spray lubricant in each of the adjustment holes **(B)** as well as on the pin **(C)** that will be visible when the knob is pulled out.

Rear Wheel Axle Bolts **(D)**: Spray lubricant on the rear wheel axle bolts on the inside between the swing arm cover **(E)**.

Front Wheel Axle Bolts: Use a flathead screwdriver to carefully pry off the orange hubcap **(F)**. Apply lubricant around the axle bolt.

Inspect your blades at least once a season and anytime your mower strikes a hard object. While your reel mower features Fiskars' exclusive StaySharp™ Cutting System with hardened steel blades, blade damage may still occur if rocks, concrete edges or other hard debris are struck. Before checking for blade damage, ensure that the mower cannot roll forward by positioning it on a firm, level surface with blocked rear wheels. Examine the entire length of the ground edges on all five cutting reel blades and the stationary blade. If a dent or ding is found, determine if the ding causes the cutting reel blade and stationary blade to touch. To do this, slowly pull the cutting reel downward while listening for scraping and feeling for resistance in the area of the ding. If there is no contact, there is no need to repair the ding. Simply treat it with rust preventative and re-inspect periodically in case raised edges appear with continued use.

⚠ **WARNING:** The mower blades are sharp. Wear gloves when performing this procedure, and keep fingers away from the interface between the cutting reel blades and stationary blade.

To avoid further damage, repair any ding that causes the cutting reel and stationary blade to touch as quickly as possible. With care, any ding found can be repaired with little or no impact on your mower's cutting performance. Before beginning, get a narrow, fine file (like the one found in the Fiskars Tool Care Kit, Model 7862) and position the mower on a firm, level surface with blocked rear wheels to ensure that it cannot roll forward. To remove the ding, file away only enough of the raised material to allow the cutting reel to spin without making contact with the stationary blade. File with long, straight strokes perpendicular to the cutting edge of the blade, trying to avoid removing material from the cutting edge itself. When the raised edges are filed down, check the cutting gap as described in *Checking Cutting Performance* on page 10.

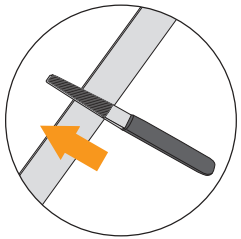

⚠ **WARNING:** The mower blades are sharp. Wear gloves when performing this procedure, and keep fingers away from the interface between the cutting reel blades and stationary blade.

ATTENTION: Do not use a power tool to repair blades. Too much steel will be removed, resulting in severe blade damage and greatly reduced cutting performance.

To Maintain Peak Cutting Performance. Your reel mower features a non-contact StaySharp™ Cutting System that cuts grass without the reel and stationary blades actually touching. Under normal usage conditions, StaySharp™ blades should stay sharp for the life of the mower. In the unlikely event that the blades on a heavily used reel mower begin to show signs of wear, Fiskars recommends backlapping to restore the blade edges (backlapping compound available in Fiskars' Blade Maintenance Kit, Model 6215).

ATTENTION: Fiskars does not recommend sharpening your reel mower. The equipment and processes used in home sharpening kits, and even by many professional sharpeners, will likely not be able to achieve the strict tolerances required to maintain the non-contact nature of the StaySharp™ Cutting System.

FISKARS®

StaySharp™ Plus

Model Number: 1015649

Fiskars Finland Oy Ab
Hämeentie 135 A, P.O. Box 130
FI-00561 Helsinki
Finland
+358 (0) 204 3910
www.**fiskars.com**