Performance C Series

XILENCE

XP400R6 / XP500R6 / XP600R6 / XP700R6

The new Xilence Performance C series is focusing on the essentials. Designed for office and home computers, the new Performance C series delivers stable voltages with high efficiency (ErP2014). This guarantees a considerably low fan noise. Four built-in safty circuits ensure safe operation at all times.

Productfeatures

- extremely silent cooling: large 120mm fan
- excellent air flow design for a better heat dissipation -
- following saftey design: Over Voltage Protection (OVP),
- Under Voltage Protection (UVP), Short Circuit Protection (SCP), Over Load Protection (OLP)
- low stand-by consumption
- complies with ErP2014 norm

Technical Data

XP400R6

AC INPUT	DC OUTPUT	
200V - 240V	+3.3V	10.0A
	+5V	10.0A
	+12V	15.0A
	-12V	0.3A
	+5VSB	3.0A
	10 %	78,21 %
	20 %	82,64 %
	50 %	85,43 %
	100 %	82,55 %
	300 W	continous
	400 W	Peak Power

Efficiencies

Cablemanagement

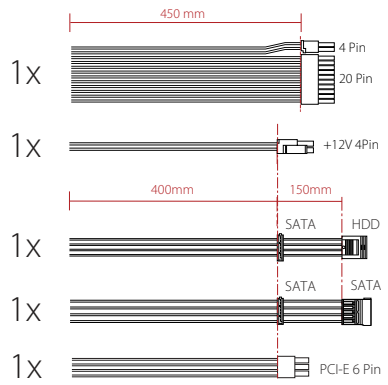

XP500R6

AC INPUT	DC OUTPUT	
200V - 240V	+3.3V	15.0A
	+5V	12.0A
	+12V1	15.0A
	+12V2	15.0A
	-12V	0.3A
	+5VSB	3.0A
	10 %	81,70 %
	20 %	85,38 %
	50 %	85,82 %
	100 %	82,67 %
	350 W	continous
	500 W	Peak Power

Efficiencies

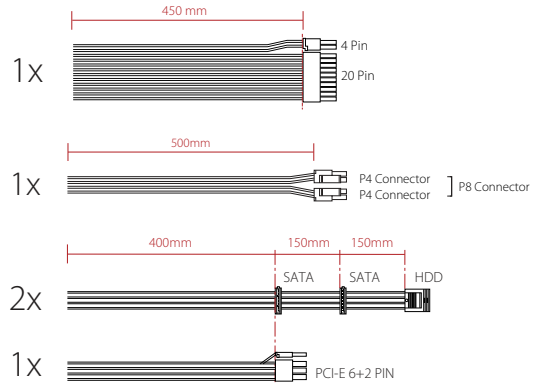

All trademarks and registered marks are the property of their respective companies. Errors excepted. Subject to change without prior notice. Images may di"er from original product.

Technical Data

XP600R6

AC INPUT	DC OUTPUT	
200V - 240V	+3.3V	15.0A
	+5V	15.0A
	+12V	18.0A
	+12V2	20.0A
	-12V	0.3A
	+5VSB	3.0A

Efficiencies

10 %	82,09 %
20 %	85,81 %
50 %	86,11 %
100 %	82,49 %
450 W	continous
600 W	Peak Power

Cablemanagement

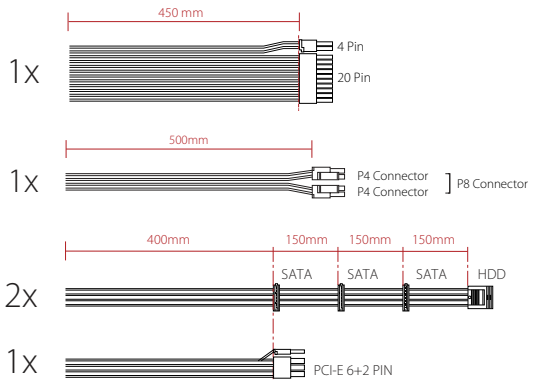

XP700R6

AC INPUT	DC OUTPUT	
200V - 240V	+3.3V	18.0A
	+5V	15.0A
	+12V	30.0A
	+12V2	30.0A
	-12V	0.3A
	+5VSB	3.0A

Efficiencies

10 %	83,87 %
20 %	86,96 %
50 %	86,90 %
100 %	83,24 %
550 W	continous
700 W	Peak Power

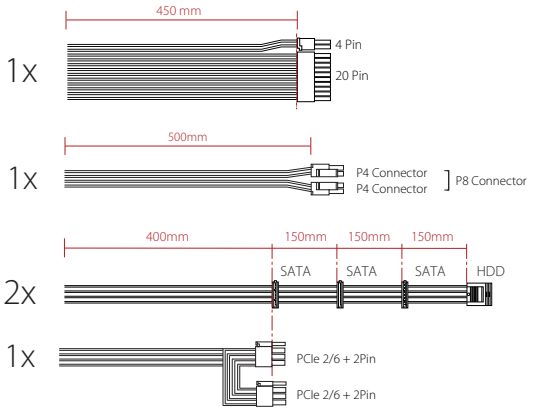

Logistical Data

Manufacturer number	Item number	EAN Barcode
XP400R6	XN041	4044953500213
XP500R6	XN042	4044953500220
XP600R6	XN044	4044953500237
XP700R6	XN046	4044953500541

All trademarks and registered marks are the property of their respective companies. Errors excepted. Subject to change without prior notice. Images may di"er from original product.