ROI

Region of Interest Converters

DVI, DP, HDMI, SDI to SDI Scalers

Installation and Operation Guide

Version 1.4
Published January 4, 2017 4:43 PM

AJA VIDEO SYSTEMS

Notices

Trademarks

AJA® and Because it matters.® are registered trademarks of AJA Video Systems, Inc. for use with most AJA products. AJA™ is a trademark of AJA Video Systems, Inc. for use with recorder, router, software and camera products. Because it matters.™ is a trademark of AJA Video Systems, Inc. for use with camera products.

CION®, Corvid Ultra®, Io®, Ki Pro®, KONA®, KUMO®, ROI® and T-Tap® are registered trademarks of AJA Video Systems, Inc.

AJA Control Room™, KiStor™, Science of the Beautiful™, TruScale™, TruZoom™, V2Analog™ and V2Digital™ are trademarks of AJA Video Systems, Inc.

AirPort, Apple, Apple logo, AppleShare, AppleTalk, FireWire, iPod, iPod touch, Mac, Macintosh and ProRes, are registered trademarks of Apple Inc. Final Cut Pro, QuickTime and QuickTime logo are trademarks of Apple Inc.

Avid, Avid DNxHD and Media Composer are registered trademarks of Avid Technology, Inc.

Adobe is a registered trademark of Adobe Systems Incorporated in the United States and/or other countries.

HDMI, the HDMI logo and High-Definition Multimedia Interface are trademarks or registered trademarks of HDMI Licensing, LLC.

DVI is a registered trademark of DDWG.

TASCAM is a registered trademark of TEAC Corporation.

Dolby and the double-D Dolby logo are registered trademarks of Dolby Laboratories Licensing Corporation.

openGear® Ross, ROSS, ROSS®, and MLE are registered trademarks of Ross Video.

DashBoard Control System™ is a trademark of Ross Video.

All other trademarks are the property of their respective holders.

Copyright

Copyright © 2017 AJA Video Systems, Inc. All rights reserved. All information in this manual is subject to change without notice. No part of the document may be reproduced or transmitted in any form, or by any means, electronic or mechanical, including photocopying or recording, without the express written permission of AJA Video Systems, Inc.

Contacting AJA Support

When calling for support, have all information at hand prior to calling. To contact AJA for sales or support, use any of the following methods:

Telephone	+1.530.271.3190
FAX	+1.530.271.3140
Web	http://www.aja.com
Support Email	support@aja.com
Sales Email	sales@aja.com

Table of Contents

Notices 2
Trademarks 2
Copyright 2
Contacting AJA Support 2

Chapter 1 – Introduction 6
Overview 6
Video Processing 6
Audio Handling 6
ROI-DVI, ROI-DP, ROI-HDMI 6
ROI-SDI 6
Control Interface 7
HDCP Protection 7
Features 7
ROI-HDMI 7
ROI-DP 7
ROI-DVI 7
ROI-SDI 7
All ROI Models 7
Pixel Clock Rate 8
ROI-DVI, ROI-DP, ROI-HDMI 8
ROI Processing Capabilities 8
Mini-Config Overview 8
Simplified Block Diagram 9
I/O Connections 9
ROI-HDMI 9
HDMI Input 9
HDMI Output 10
ROI-DP 10
DisplayPort Input 10
DisplayPort Output 10
ROI-DVI 11
DVI Input 11
DVI Output 11
ROI-SDI 12
3G-SDI Input 12
3G-SDI Loop Through Output 12
Models ROI-HDMI, ROI-DP, ROI-DVI 12
Analog Audio 12
USB Port 13
SDI Video Output 13
Reference Video Input 13
Model ROI-SDI 13
Digital/Analog Audio 13
USB Port 13
SDI Video Output 13
Reference Video Input 13
Typical ROI Configurations 13
Installation 16

Chapter 2 – Operation 17
USB Control and Setup—Using AJA Mini-Config 17
Acquiring Mini-Config 17
Mini-Converter Documentation 17
Installing Mini-Config 17
PC Installation 17
Mac Installation 18
Running Mini-Config 19

Table of Contents

PC Startup . . . 19
Mac Startup . . . 19
Saving Setups . . . 20
Operating Mini-Config . . . 20
Running Multiple Mini-Converters . . . 20
Tabbed Screens . . . 21
Input Screen . . . 22
Click and Drag Options . . . 23
Screen Picker Operation . . . 24
Output Screen . . . 26
About the Rotation, Flip, and Frame Delay Controls . . . 28
HDMI Screen (applicable only to ROI-SDI model) . . . 30
Monitor Matrix Screen . . . 31
Genlock Screen . . . 32
ROI-HDMI and ROI-DVI Genlock Screen . . . 32
ROI-SDI Genlock Screen . . . 33
ROI-DP Genlock Screen . . . 34
Audio Screen . . . 35
ROI-HDMI and ROI-DVI Audio Screen . . . 35
ROI-DP Audio Screen . . . 36
ROI-SDI Audio Screen . . . 37
Update Screen . . . 38
Info Tab Screen . . . 39

Appendix A – Specifications . . . 41
ROI-HDMI Specifications . . . 41
Video Input Formats . . . 41
Video Output Formats . . . 41
Color Range . . . 41
Reference Input . . . 41
Video Input . . . 41
Video Outputs . . . 42
HDCP . . . 42
Audio Inputs . . . 42
Audio Output . . . 42
User Controls . . . 42
Size (w x d x h) . . . 42
Weight . . . 42
Power . . . 42
Environment . . . 42
ROI-DP Specifications . . . 42
Video Input Formats . . . 42
Video Output Formats . . . 43
Color Range . . . 43
Reference Input . . . 43
Video Input . . . 43
Video Outputs . . . 43
HDCP . . . 43
Audio Inputs . . . 43
Audio Output . . . 44
User Controls . . . 44
Size (w x d x h) . . . 44
Weight . . . 44
Power . . . 44
Environment . . . 44
ROI-DVI Specifications . . . 44
Video Input Formats . . . 44
Video Output Formats . . . 45

Table of Contents

Input Data Range Control 45
Reference Input 45
Video Input 45
Video Outputs 45
HDCP 45
Audio Inputs 45
Audio Output. 45
User Controls 45
Size (w x d x h) 46
Weight 46
Power. 46
Environment 46
ROI-SDI Specifications 46
Video Formats 46
Reference Input 46
Video Input 46
Video Outputs 46
HDCP 47
Audio Output Digital 47
Audio Output Analog 47
User Controls 47
Size (w x d x h) 47
Weight 47
Power. 47
Environment 47

Appendix B – Safety & Compliance. 48

Warranty Information 57
Limited Warranty 57

Index. 58

Chapter 1 – Introduction

Overview

AJA's ROI family of scalers/scan converters allows exceptionally high quality conversion of computer and video signals in a small Mini-Converter form factor. The ROI models offer Region of Interest (ROI) support allowing DVI, HDMI, Display Port, and SDI input signals to be scaled and converted to a SDI output. The ROI-SDI model also provides a scaled HDMI output. With incredible image scaling, extensive aspect ratio and frame rate conversion, ROI fulfills the need to scale computer and video to a desired resolution, all in realtime, in a very portable and easy to use package.

The four models of ROI Mini-Converters available are:

- ROI-DVI
- ROI-DP
- ROI-HDMI
- ROI-SDI

Video Processing

In default mode, the ROI-DVI, ROI-DP, and ROI-HDMI models automatically detect the input signal format and convert it to the SDI (and HDMI, for the ROI-SDI) output video format. Their respective DVI, DP and HDMI outputs pass the signal through without any processing, maintaining the incoming signal aspect ratio.

For the ROI-SDI, the incoming signal is passed to the SDI Loop Through Output, without any processing, maintaining the incoming signal aspect ratio. The processed signal goes to both the HDMI output and the SDI output.

If the SDI output raster is larger than the input raster, unused area is filled with matte color.

To realize the full power of ROI, however, you will need to use the supplied USB cable and AJA's Mini-Config application to select the desired output format and perform a variety of region-of-interest and output display scaling operations. Once configured, the ROI unit can run standalone.

Audio Handling

ROI-DVI, ROI-DP, ROI-HDMI

Analog audio from the host can be input via a standard 3.5mm audio cable and mapped to the embedded SDI output stream. Alternatively, if the input is HDMI or DP, its embedded audio can be the audio input. The ROI-DVI model can receive both DVI and HDMI protocol input, and accepts audio if it is embedded in an HDMI signal. However, the DVI protocol does not carry audio, so if the ROI-DVI is receiving DVI input, only analog audio can be embedded to the output.

ROI-SDI

Digital audio embedded in the SDI input is carried through to both the SDI output and the HDMI output. Analog audio can be output through the two analog RCA Jacks (2 channels). Digital audio can be embedded through the SDI output as 24-bit, 8 channel, and/or through the HDMI output as 24-bit, 2 channel or 8 channel.

Control Interface

For control, the ROI is connected to a computer via USB. The ROI has no local, physical user-interface (no dipswitch settings). The ROI can operate stand-alone without a USB connection to the host. In this mode, the ROI automatically adapts to the input signal, and operates according to defaults or as last configured via the AJA Mini-Config application (see "Chapter 2 – Operation" on page 17).

HDCP Protection

The ROI honors HDCP, and will not allow an HDCP link. If the input content is HDCP protected, no source video will be displayed on the ROI's DVI pass-through connector, or on the ROI's SDI output.

Features

ROI-HDMI

- Converts HDMI input to 3G, HD, or SD-SDI output

ROI-DP

- Converts DisplayPort input to 3G, HD, or SD-SDI output

ROI-DVI

- Converts DVI input to 3G, HD, or SD-SDI output

ROI-SDI

- Extracts 3G-SDI input and outputs to 3G, HD, SD-SDI and/or HDMI

All ROI Models

- High quality scaling and scan conversion
- User-adjustable "region of interest," separate controls for input and output
- 4:3/16:9 conversion modes supported
- Setup via PC/Mac using Mini-Config software with the USB port and supplied USB cable
- Frame-rate conversion
- Automatic configuration to input video raster and frame rate
- SDI output configurable to most common SD, HD and 3G formats (1080p 60 max)
- Edge filtering control
- Rotation, Horizontal and Vertical flip controls
- Monitor Matrix setup controls
- Frame delay control
- Genlock and frame sync with reference input
- Adjustable Horizontal and Vertical video delay from sync input
- Audio input via 3.5mm 2-channel analog input or 8-channel embedded (if present) (excluding ROI-SDI model)
- Embedded SDI audio out (up to 8 channels)
- Uses universal input +5V power supply AJA model DWP-U-R1 (included)
- 5-year warranty

Pixel rates are limited to a 165MHz maximum rate.

Pixel Clock Rate

ROI-DVI, ROI-DP, ROI-HDMI

The source video pixel clock is a combination of the video resolution and its vertical rate. Some sources can generate pixel clock rates that exceed the capabilities of the ROI-DVI, ROI-DP, and ROI-HDMI converters. It may not be obvious what the resulting pixel clock will be for a particular resolution or vertical rate.

For example, when a downstream sink device is connected to the ROI output monitor connector, the source and sink could potentially negotiate a display format (using EDID) that is beyond the capability of ROI's video processing circuitry.

When this error occurs, an "Exceeds max rate" red error message will be displayed on the Mini-Config user interface, and the ROI will generate a full screen red matte on the SDI output. A downstream DVI/DP/HDMI/SDI monitor will still display the incoming video.

Possible solutions include:

- Disconnect the downstream device (for example, a computer monitor) from the ROI. Once disconnected, ROI will negotiate directly with the source to generate a video resolution that is within the ROI's processing capability.
- Reconfigure the source signal to a resolution that ROI supports.
- On ROI-DP models, from the Genlock Screen, select ROI-DP from the EDID Flow Through control so that the upstream source sees only the EDID of the ROI (see "EDID Flow Through" on page 34).

ROI Processing Capabilities

The ROI models utilize a powerful scaling processor, however, some specific combinations of input and output ROI selections, de-interlacing, and 180° rotations or flips can exceed the processing capacity of the ROI Mini-Converters.

In these cases, a "Processing Limit Exceeded" red error message is displayed on the Mini-Config user interface, and the ROI will automatically turn off certain features in order to process the picture. These features that have been turned off will be reported and will be in red. For an example, see "Figure 19. Processing Limit Exceeded" on page 29.

Possible solutions include:

- Reduce the size of the Region of Interest selections; input ROI, output ROI, or a combination of both.
- Turn off 180 degree rotation and/or H and V flips, or frame delay.
- Use a progressive rather than interlace input signal.

Mini-Config Overview

Using AJA's Mini-Config application, you can set up and control region-of-interest and output display scaling operations, route audio, and configure genlock. Mini-Config is also used to update the Mini-Converter firmware.

Simplified Block Diagram

Figure 1. ROI Converter/Scaler, Simplified Block Diagram

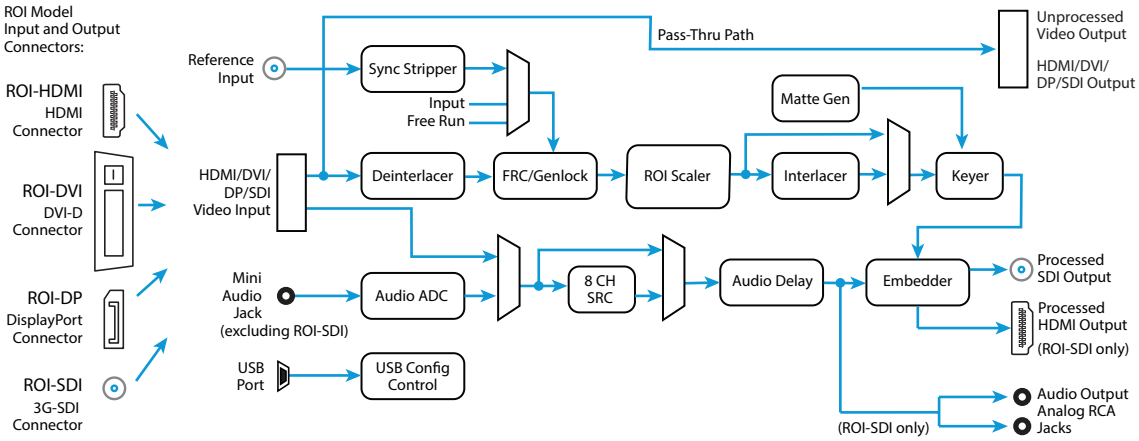

I/O Connections

ROI-HDMI

Figure 2. ROI-HDMI Converter/Scaler

HDMI Input

Connects to your computer or single-link source device.

To connect a DVI video input to the ROI HDMI input connector, use a passive DVI-to-HDMI adapter (user-supplied). You can also use a cable adapter that has a DVI connector on one end of the cable and an HDMI connector on the other.

HDMI Output

This is a pass-through output for use on a second computer monitor for using the AJA Screen Picker feature (see "Screen Picker Operation" on page 24). Connections are the same as described for DVI/HDMI input above.

ROI-DP

Figure 3. ROI-DP Converter/Scaler

DisplayPort Input

Connects to your Computer or single-link source device.

DisplayPort Output

This is a pass-through output for use on a second computer monitor for using Screen Picker. Connections are the same as described for DisplayPort input above.

ROI-DVI

Figure 4. ROI-DVI Converter/Scaler

DVI Input

Connects to your Computer or single-link source device.

To connect an HDMI video input to the ROI DVI input connector, use a passive HDMI-to-DVI adapter (user-supplied). You can also use a cable adapter that has an HDMI connector on one end of the cable and a DVI connector on the other.

DVI Output

This is a pass-through output for use on a second computer monitor for using Screen Picker. Connections are the same as described for DVI/HDMI input above.

ROI-SDI

Figure 5. ROI-SDI Extracter/Scaler

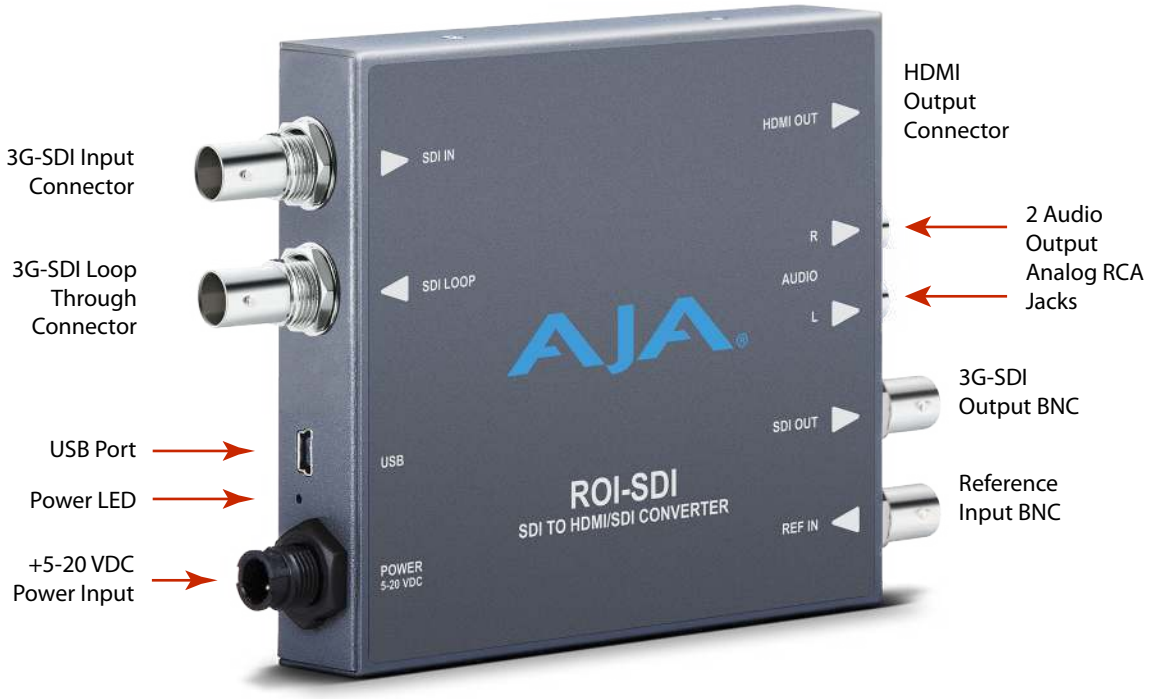

3G-SDI Input

Connects to your 3G-SDI source signal or single-link source device.

3G-SDI Loop Through Output

This is a pass-through output for use on a second monitor.

NOTE: To adjust the region of interest selection, use the methods described in the section for the "Input Screen" on page 22 with either the processed HDMI output signal or the processed 3G-SDI output signal feeding a monitor.

Models ROI-HDMI, ROI-DP, ROI-DVI

Analog Audio

A single 3.5 mm analog audio connector accepts two channels of analog audio which can be embedded into the SDI output as determined by the audio configuration set using Mini-Config.

USB Port

Accepts USB mini connector

SDI Video Output

Standard BNC connector for coaxial SDI monitor connection.

Reference Video Input

The Reference BNC accepts an Output timing reference signal. The reference can be SD Blackburst or HD tri-level sync.

Model ROI-SDI

Digital/Analog Audio

The 3G-SDI input connector accepts 8 channels of embedded digital audio, which can be embedded into the SDI output, embedded into the HDMI output, and/or output as 2 channels of analog audio as determined by the audio configuration set using Mini-Config.

USB Port

Accepts USB mini connector

SDI Video Output

Standard BNC connector for coaxial SDI monitor connection.

Reference Video Input

The Reference BNC accepts an Output timing reference signal. The reference can be SD Blackburst or HD tri-level sync.

Typical ROI Configurations

This section covers six example configurations of ROI, including ROI-DVI, ROI-HDMI, and ROI-SDI.

Two typical configurations for using the ROI for scaling of desktop region-of-interest computer-sourced video are illustrated in the following two figures. In these configurations, the pass-through monitor is used to view the subject desktop video and to use the Mini-Config application's Screen Picker function to select the desired region for output to SDI (see "Screen Picker Operation" on page 24).

Figure 6. ROI with Laptop Computer, System Interconnect Diagram

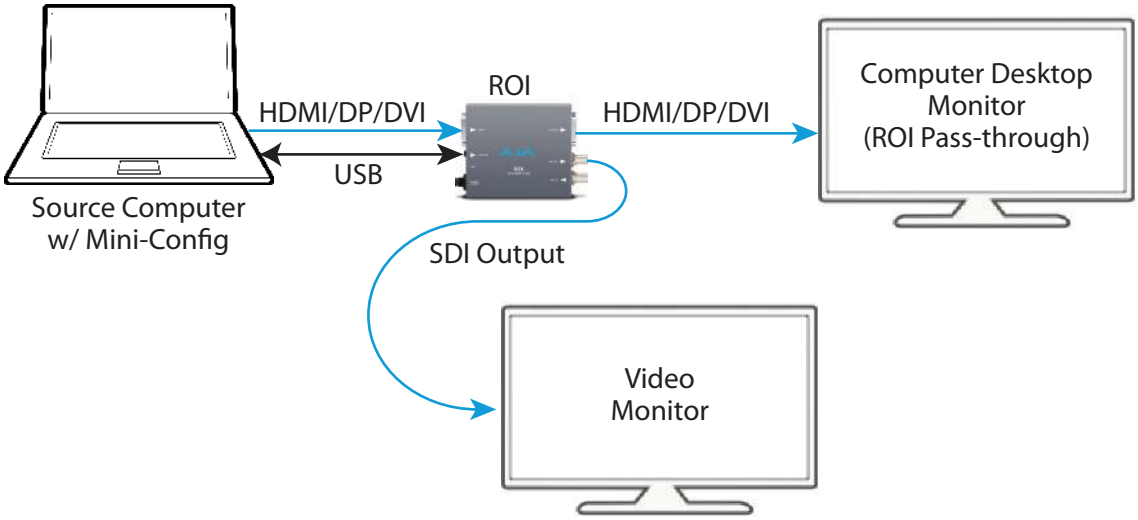

Figure 7. ROI with Tower Computer & Two Monitors, System Interconnect Diagram

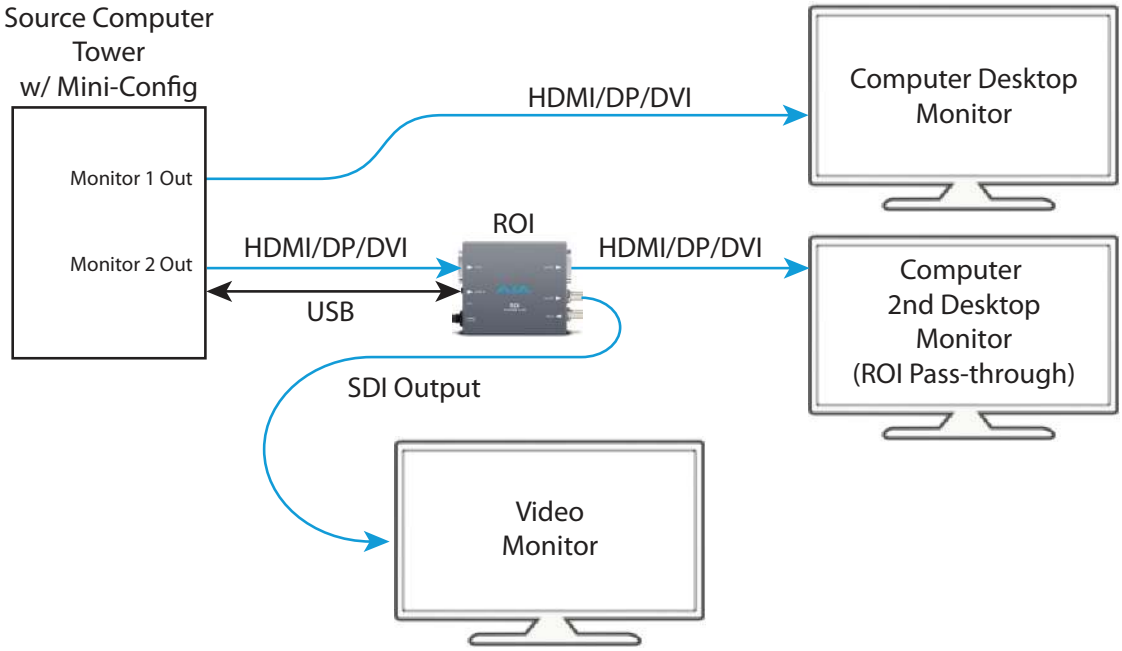

A third example (Figure 8) illustrates use of the ROI Rotation feature to send selected areas of a SDI signal to portrait mounted on-set monitors at full resolution. Each monitor uses one ROI converter, accomplishing the task at a much lower cost than dedicating DVE channels for rotation and resizing.

Figure 8. ROI Rotation with Portrait Mounted On-Set Monitors

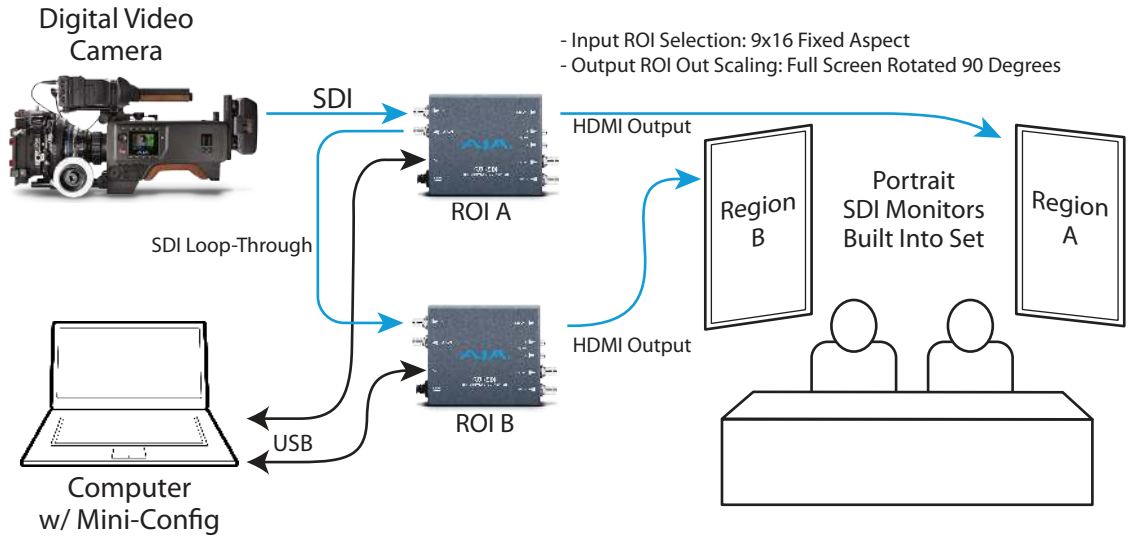

A fourth example below illustrates sending HDMI digital video from a camera to a ROI to allow region of interest video input to a video switcher. Since the source video is not coming from the computer that is running Mini-Config, the Screen Picker feature cannot be used in this configuration (Figure 9).

Figure 9. ROI-HDMI with Video Camera to Switcher Interconnect Diagram

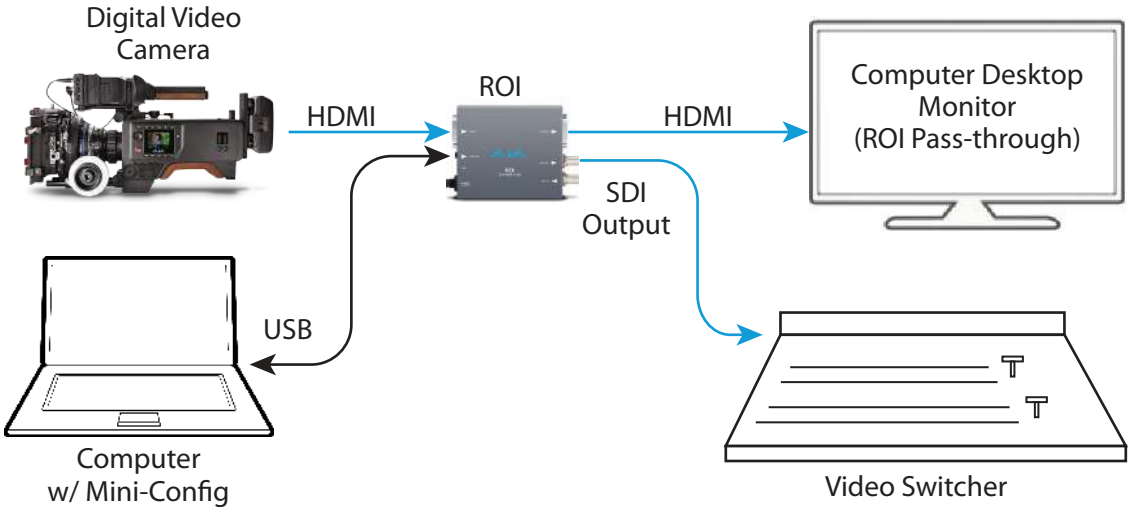

In a parallel configuration as Figure 9, Figure 10 below shows a basic configuration of the ROI-SDI being used to send a 3G-SDI digital video signal from a 3G-SDI source to allow region of interest video input to a video switcher. As in Figure 9, since the source video is not coming from the computer that is running Mini-Config, the Screen Picker feature cannot be used in this configuration. However, you can use the other methods for adjusting the region of interest selection described in the section for the "Input Screen" on page 22 with either the processed HDMI output signal or the processed 3G-SDI output signal feeding a monitor.

Figure 10. ROI-SDI with 3G-SDI Source to Switcher Interconnect Diagram

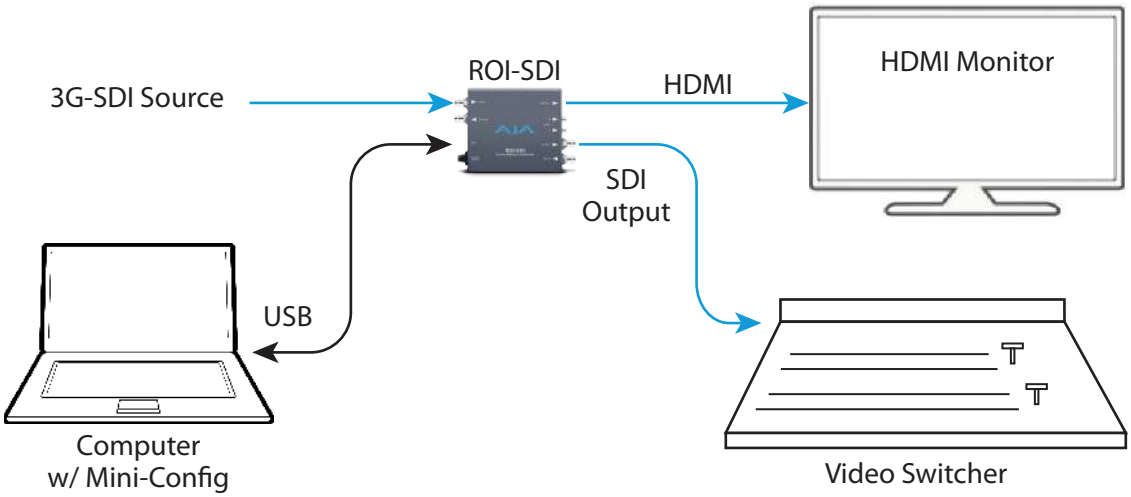

Installation

Typically, ROI installation consists of the following steps:

1. Ensure the ROI is disconnected from power.
2. Connect your computer or video console monitor output to the ROI's HDMI/DVI/DP input connector. For ROI-SDI, connect your SDI source signal to the ROI's SDI input connector.
3. Connect the ROI's HDMI/DVI/DP output connector to a second monitor (optional). For ROI-SDI, this would be the SDI Loop output connector.
4. Connect a video monitor to the converter SDI output BNC. The ROI-SDI offers both an HDMI output and an SDI output for the processed signal.
5. If using ROI-HDMI/DVI/DP, connect two-channel analog audio input to analog audio connector (optional).
6. If using ROI-SDI, connect two analog RCA jacks (optional).
7. Apply power to the converter (AJA power supply included).
8. The converter will now run using the default factory settings. If you wish to alter the factory settings, you'll need to:
   - Install the AJA Mini-Config software onto your computer.
   - Attach the converter via USB cable (included).
   - Make your changes using Mini-Config setup screens.

Chapter 2 – Operation

IMPORTANT: Once the ROI has been configured with Mini-Config, those settings will continue to be used in stand-alone mode (disconnected from USB) as long as the input format remains the same. If a different input format is connected, the ROI will revert to Auto mode. However, if the original input format is re-connected, the ROI will exit Auto mode and restore the previously configured settings for that format.

USB Control and Setup—Using AJA Mini-Config

Your AJA Mini-Converter can be used right out of the box for some applications since it is designed to recognize inputs and perform standard actions automatically by default. However, to use its full capability, you must use AJA's Mini-Config software application for PCs and Macs. This same application can be used to update to new Mini-Converter software released by AJA.

Acquiring Mini-Config

AJA's Mini-Config application is available for download from the AJA website.

To download the latest Mini-Config package, which includes the Mini-Config application, Mini-Converter firmware, and documentation, go to:

https://www.aja.com/en/products/mini-converters/mini-config-software

Select either the Windows or Mac icon to download the desired version.

Mini-Converter Documentation

Included with the Mini-Config package is a complete set of documentation for all Mini-Converters supported by Mini-Config. A .PDF of the *Installation and Operation Guide* for the currently connected Mini-Converter can be accessed from the Mini-Config UI via the **Help/Manual** drop-down menu.

Documentation for all AJA Mini-Converters that use Mini-Config can also be accessed directly in the Mini-Config download package Documentation folder, and via the Documentation icon available on the Mac installer.

Documentation (and firmware) included with the Mini-Config application are the versions available at the time of distribution. However, Mini-Converter software, firmware and documentation are updated regularly, so newer versions may exist.

To download the latest documentation for an individual Mini-Converter, go to:

https://www.aja.com/en/category/mini-converters

and navigate to the Support webpage of that Mini-Converter.

Installing Mini-Config

PC Installation

To install Mini-Config on a Windows PC:

1. Download the application from the AJA website (select the Windows icon on the Mini-Config Support webpage).
2. Open the AJA_MiniConfig.zip file
3. Double-click on the MiniInstaller.msi file.

4. A Setup Wizard will guide you through the installation.

Figure 11. Mini-Config PC Setup Wizard

5. Click **Next** to begin. Answer the questions in the subsequent dialogues. When finished, an AJA Mini-Config shortcut will be installed on the desktop, and you will be able to locate the Mini-Config application in the AJA folder in the Programs listing.

NOTE: If the Mini-Config application already exists on the PC, a different Setup Wizard appears.

Figure 12. Mini-Config Setup Wizard, Reinstallation

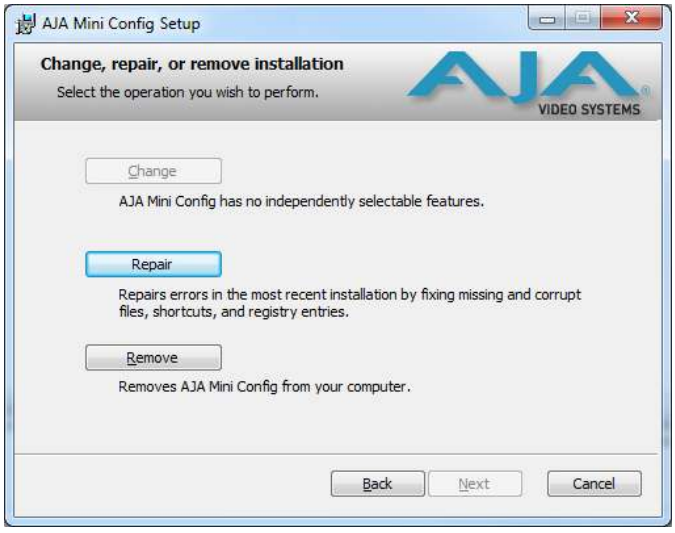

With this screen you can **Repair** (reinstall) or **Remove** (uninstall) Mini-Config on the PC.

Mac Installation

To install the application on a Mac:

NOTE: Macintosh computers must be Intel-based (G5, G4 and earlier models will not work with Mini-Config).

1. Download the application from the AJA website (select the Apple icon on the Mini-Config Support webpage).
2. Open the AJA_MiniConfig folder.

3. Double-click on the AJAMiniConfig.dmg file.
4. Answer the prompt and a utility program will be launched.

Figure 13. Mini-Config Mac Installer

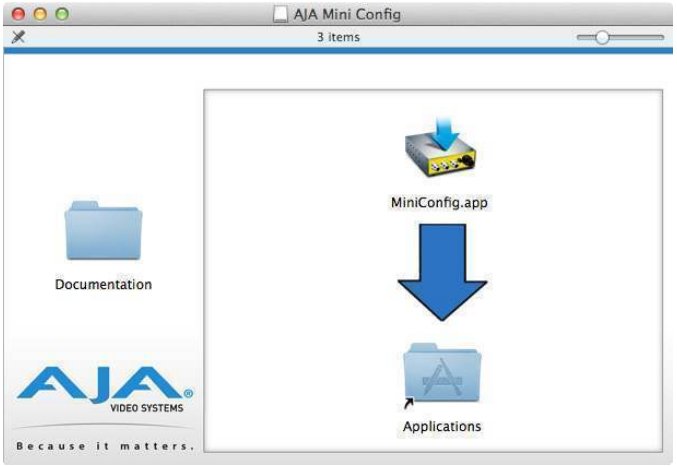

5. To complete the installation drag the "MiniConfig.app" icon to the Applications folder.

Running Mini-Config

Connect the Mini-Converter to the PC or Mac via the supplied USB cable. Connect the external power supply (supplied) to the Mini-Converter.

PC Startup

To run Mini-Config on a PC, double-click on the AJA Mini-Config icon on your desktop, or open the AJA folder in the program list and click on the AJA Mini-Config application located inside the Mini-Config folder.

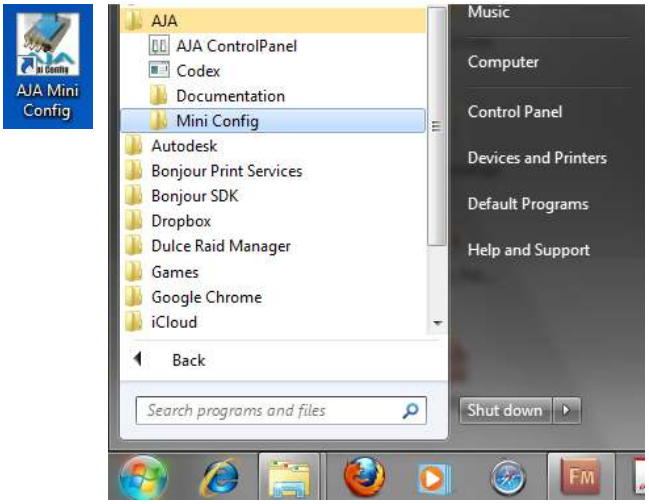

Mac Startup

To run Mini-Config on a Mac, open the Applications folder and locate the AJA Mini-Config application. Double-click the application to launch it.

Saving Setups

A **File** drop down menu on the Mini-Config application bar allows you to save the current state of the Mini-Converter to a preset file for later recall.

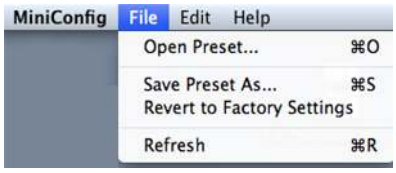

Using this feature you can set up the converter for different applications, storing each configuration (**Save Preset As...**) with a unique name for easy recall (**Open Preset...**).

A **Revert to Factory Settings** menu item similarly allows you to change the settings back to AJA's factory defaults.

Operating Mini-Config

The Mini-Config application provides a graphic interface for viewing settings and updating software. It consists of an information area at the top that shows the available Mini-Converters attached to the computer via USB, with a graphical rendering of the selected Mini-Converter showing all the connectors and their current state.

Colored text next to the connectors indicates the signal type and what the Mini-Converter is doing:

- Blue text indicates the values automatically selected
- Black text indicates values that you have manually selected
- Red text indicates the Mini-Converter is not detecting a signal, or cannot operate with the current user settings.

NOTE: Even if no output device is detected, the SDI connector text still shows the signal it is outputting.

NOTE: Configuration settings in red will change based on the attached output device as well as input signals. For improved accuracy and reliability, you should configure the Mini-Converter only when the target output device is attached and input signals are supplied at the inputs.

Screens are virtually the same on both PC and Mac, with subtle differences that reflect the general look of the platform environment.

Running Multiple Mini-Converters

Mini-Config can manage multiple AJA Mini-Converters connected via USB—even when they are of differing types. However it only connects to one at a time. You can choose which Mini-Converter you wish to control using the pulldown menu in the upper right hand corner. If you want to configure multiple Mini-Converters in parallel, you can do it by running multiple instances of the Mini-Config application and have each control a different Mini-Converter.

NOTE: During a Mini-Converter firmware update, only one Mini-Converter should be connected to the computer via USB.

Figure 14. Example Mini-Config Screen

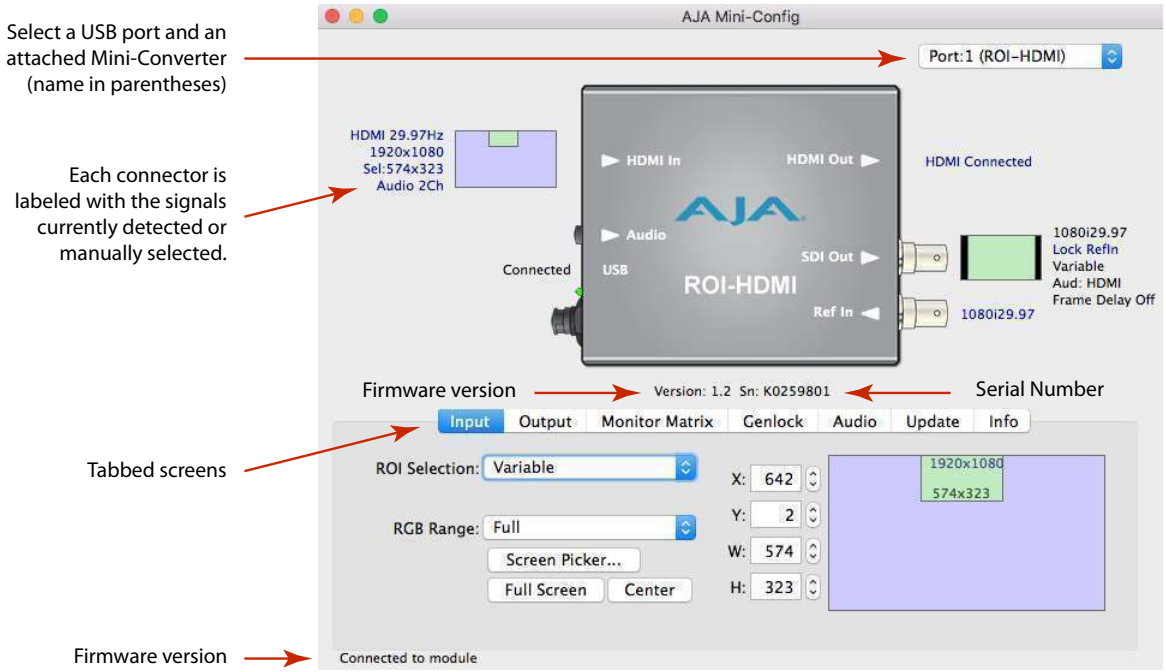

Selecting a Mini-Converter with the pulldown menu causes this application to connect to the selected converter. The graphic of Mini-Converter and text below it provides:

- Type of converter
- Firmware version
- Serial number of the unit.

A status field at the bottom of the screen shows if your application is connected and communicating with the Mini-Converter.

When configuring the Mini-Converter, select it from the top pulldown, view the current settings and change any values. Making a change communicates that new value to the Mini-Converter's non-volatile memory.

Tabbed Screens

The Tabs delineate control screens with groups of controls for each type of task to be performed.

The controls for the actual configuration parameters are specific to each Mini-Converter type. When you Click on any of the tab buttons, the pane below the tabs will change to match your tab selection. Any changes you make are immediately applied and will be saved, overwriting previous settings.

NOTE: In this manual Mini-Config screens for the ROI-HDMI model are shown. Other ROI models have similar screens, with a few exceptions that are noted.

Input Screen

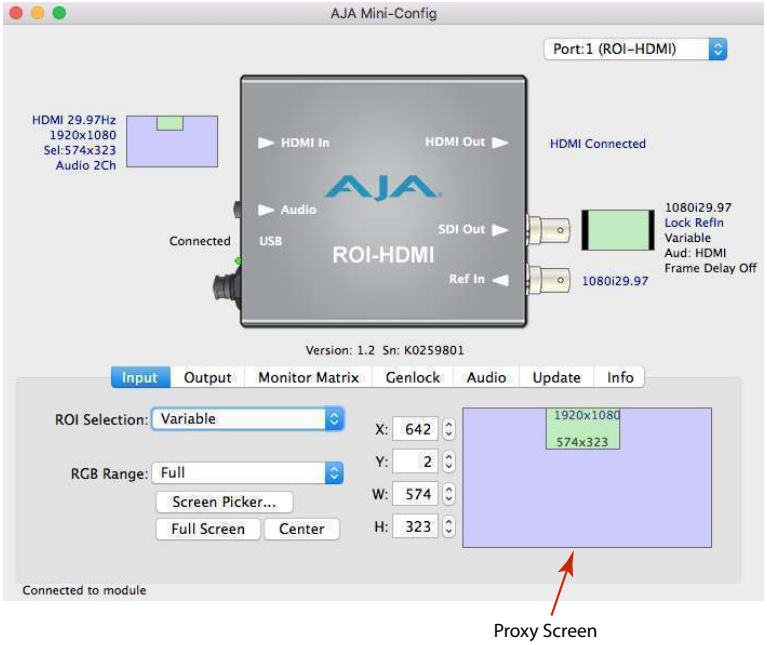

Click on the Input tab to view and make changes to the converter's input region-of-interest settings.

The Proxy Screen on the lower right shows the current region of interest setting in green with the selection pixel size at the bottom and the input pixel size at the top. Various controls are also available on the left.

NOTE: The adjustments made on the green proxy screens and Screen Picker are live and can be viewed on the SDI output.

NOTE: Portions of this screen are grayed out if no input signal is present.

ROI Selection

Using this pulldown menu you can choose a selection mode:

NOTE: Mini-Config provides a Tool-tip description for each ROI Selection mode. Hover your cursor over the mode name in the drop-down menu for a description of its function.

Auto - Selects the entire signal detected at the input to the ROI (default setting). Scales the input region-of-interest as large as possible to fit into the SDI output region while maintaining the incoming aspect ratio. Matte may result if the input's aspect ratio does not match the SDI out aspect ratio.

NOTE: Auto selections in the Input screen and the Output screen are linked. Selecting Auto from one screen will also select Auto in the other screen.

Variable - Allows user-adjustable selection of all or a portion of the input signal. When you select *Variable* as the selection type, you can choose the region-of-interest selection in three ways with no constraints:

- Use the X,Y coordinates and W,H (width, height) size fields. Within these fields, you can enter values (if they are valid) or use your keyboard arrow keys to increment one pixel/line at a time for fine adjustment.
- If configuring a multiple monitor matrix, you can use the Monitor Matrix screen to select the ROI and, when applied, will fill the X, Y, W, and H fields with the correct values. See "Monitor Matrix Screen" on page 31.
- Drag the edges of the image representation (green proxy screen) at the right of the selection pane. See "Click and Drag Options" on page 23.

- Use the Screen Picker button (not applicable to ROI-SDI model) to produce a full-sized image with highlighted crop boundary box in the pass through monitor. See "Screen Picker Operation" on page 24.

NOTE: For Screen Picker operation, the resolution of the pass-through monitor Mini-Config is using must match the resolution of the input to the ROI.

Fixed Aspect - Opens a ROI Fixed Aspect drop-down menu allowing fixed aspect input region-of-interest selection. In this mode, the size of the selected region-of-interest can change but the aspect ratio is held constant:

- 4:3 (SD aspect ratio)
- 16:9 (HD aspect ratio)
- 3:4 (useful for presentation on vertically oriented monitors)
- 9:16 (useful for presentation on vertically oriented monitors)

Fixed Size - Opens a ROI Fixed Size drop-down menu allowing fixed size input region-of-interest selection. In this mode, the region-of-interest selection can change position on the input screen but the size cannot be changed. These settings allow you to easily select standard video sizes for region-of-interest.

- DV
- NTSC
- PAL
- 720HD
- 1080HD

SDI Out - Forces the region-of-interest to have the same aspect ratio as the current *SDI Out Format* setting.

RGB Range Menu (not applicable to ROI-SDI model)

The RGB Range pulldown menu allows you to select either Full range (0-1023) or SMPTE range (typically 64-940) for RGB color input.

Full Screen Button

Click the Full Screen button to set the region-of-interest to the full input raster size.

Center Button

If you choose anything other than a full-sized image (Auto) in the ROI Select menu, you will have complete control of where the region of interest selection is placed. To quickly and precisely center the region-of-interest, click the Center button.

Click and Drag Options

When using the drag method for region-of-interest placement or resizing, you can use the Option/ALT, Shift, and Arrow keys for precise adjustments.

Option/ALT key

For more control, hold down the Option/ALT key while dragging the image boundary. You will notice that the selection changes in a more gradual pixel-by-pixel manner regardless of your drag speed.

Shift key

You may change the image size while maintaining the current aspect ratio by holding down the Shift key as you drag.

Arrow Keys

You can use the keyboard arrows to increment size and placement of a variable region-of-interest selection one pixel at a time in X,Y,H,W fields and in the proxy and Screen Picker screens. (The up/down arrow keys can also be used to step through some menu selections.)

Screen Picker Operation

When Variable region-of-interest selection is enabled, pressing the Screen Picker button activates Screen Picker mode. A full-sized image with highlighted crop boundary box is displayed in the pass through monitor (refer to "Typical ROI Configurations" on page 13). Adjust the region-of-interest boundaries by dragging the image sized to the desired locations, and then press the Enter or Return key to exit Screen Picker mode.

NOTE: For Screen Picker operation, the source video must be coming from the same PC that is running Mini-Config, and the resolution of the pass-through monitor Mini-Config is using must match the resolution of the input to the ROI.

NOTE: The Screen Picker feature is not supported with ROI-SDI.

Figure 15. Screen Picker Cropping Overlay

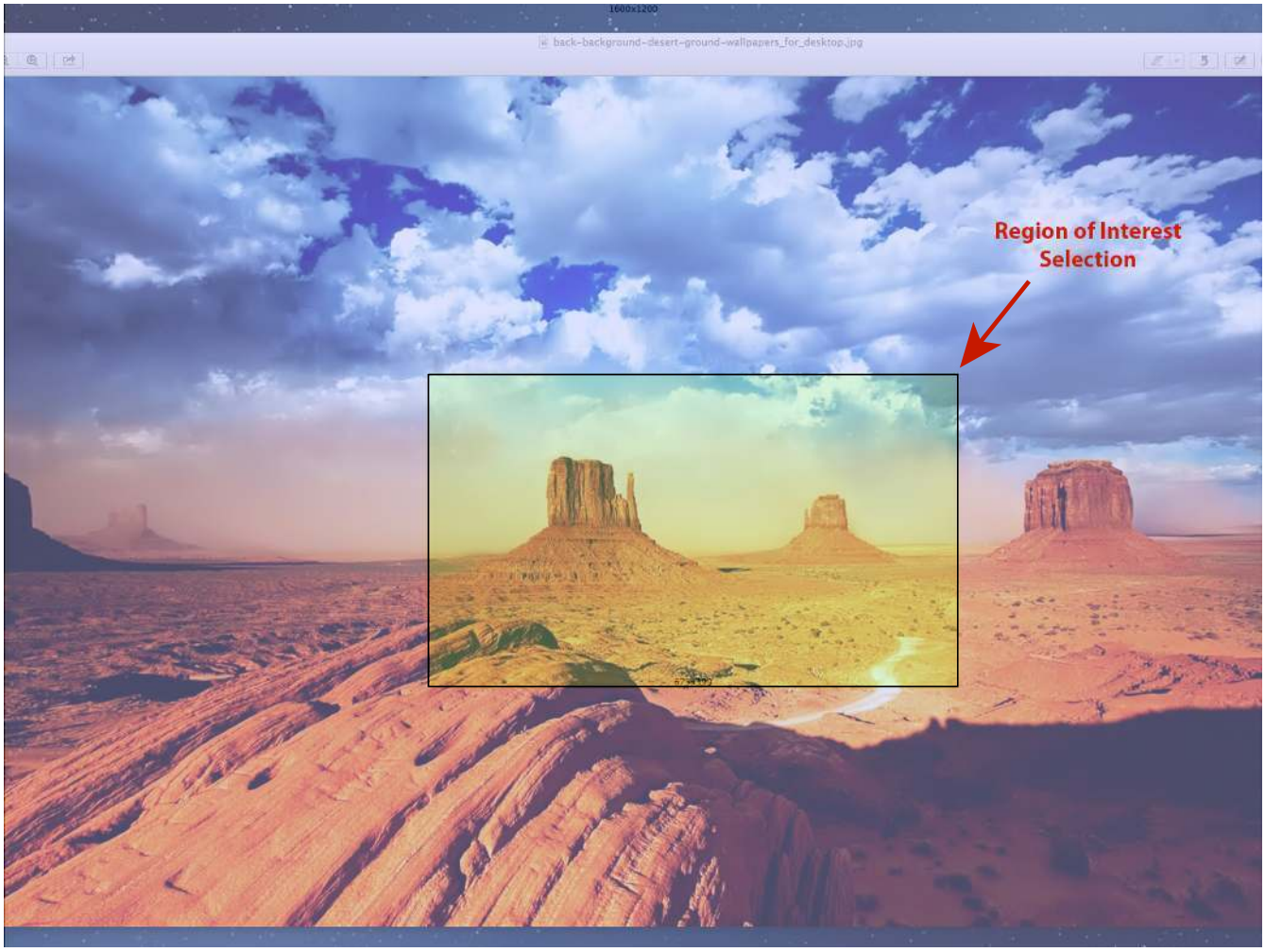

Output Screen

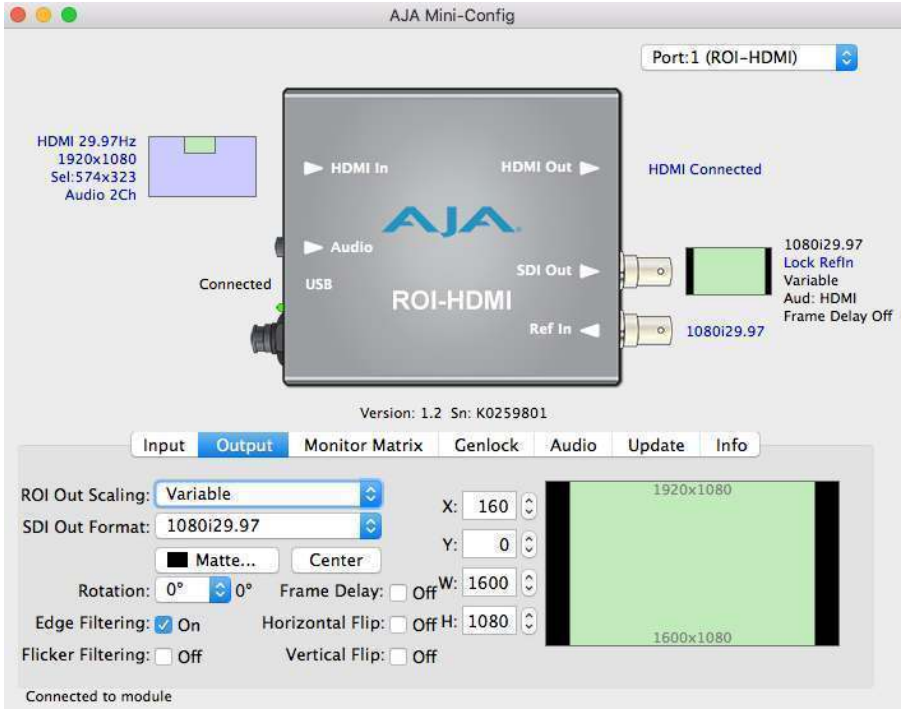

Click on the Output Tab to adjust the following parameters.

NOTE: Portions of this screen are grayed out if no input signal is present.

NOTE: Some sources can generate pixel clock rates that exceed the capabilities of the ROI. If the incoming video's pixel clock rate is too high, the ROI converter will generate a full screen red matte on the SDI output to indicate this error condition. Mini-Config will also display an "Exceeds max rate" error message. A downstream HDMI/DP/DVI/SDI monitor will still display the incoming video. See "Pixel Clock Rate" and "ROI Processing Capabilities" on page 8 for potential solutions.

ROI Out Scaling

Use the ROI Out Scaling pulldown menu to select one of the following:

NOTE: Mini-Config provides a Tool-tip description for each ROI Out Scaling mode. Hover your cursor over the mode name in the drop-down menu for a description of its function.

Auto - Automatically scales region-of-interest to maximum size with fixed aspect ratio defined by input format (default setting).

NOTE: Auto selections in the Output screen and the Input screen are linked. Selecting Auto from one screen will also select Auto in the other screen.

Fixed Aspect - Matte - Scales region-of-interest to maximum size to fit output region while maintaining aspect ratio. Matting may occur if input aspect ratio does not match output aspect ratio.

Full Screen - Scales region-of-interest to maximum size to fit output geometry. This may change aspect ratio of the image. No matting will occur.

None – Crop/Matte - No scaling occurs to region-of-interest. It is always centered on the output, and the area displayed is selected using the placement controls in the Input menu.

Variable - Allows user to arbitrarily change position and scaling of region-of-interest as it is placed into the output region.

SDI Output Format

The pulldown menu offers a full range of SDI Video Formats for output. For the complete list, see "Output Formats" on page 40. The format selection is reported in the Mini-Config graphic depicting the SDI Output.

Matte Background

Click the Matte button to pull up the matte color panel that offers various modes of background color selection.

Figure 16. Matte Color Selection Panel

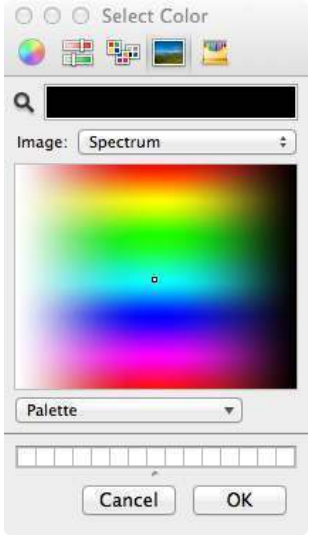

Center Button

After a screen region-of-interest has been defined, click the Center button to quickly center the image.

Edge Filtering Button

You can disable edge filtering with this control. This is useful if you are using four ROIs to drive a 4K monitor matrix. Disabling edge filtering can eliminate the vertical and horizontal lines that would occur in that situation. Default setting is On.

Flicker Filtering Button

You can enable flicker filtering with this control. This can be useful where vertical detail (horizontal lines) may strobe with the refresh rate of the display. Flicker filtering can help with interlaced outputs, and when a detailed image is scaled down into a smaller area. Default setting is Off.

NOTE: The following Rotation, Frame Delay, and Flip controls interact with each other. If the ROI's video processing circuit is unable to perform the processing, the actual Off state of each control is reported in red. See "About the Rotation, Flip, and Frame Delay Controls" on page 28 for more information.

Rotation

Opens a drop down menu for selecting of a clockwise rotation setting (see Figure 18):

- 0° (no rotation, default setting)
- 90°
- 180°
- 270°

Frame Delay

Turns Frame Delay On or Off. One frame of delay is automatically applied whenever Rotate or Flip is active. The current frame delay state (On or Off) is reported.

NOTE: Turning Frame Delay On can be useful if you are using two ROIs simultaneously, flipping or rotating only one of their outputs. Because a frame delay is always applied to the flipped or rotated output, turning on the other ROI's Frame Delay restores their relative timing.

Horizontal Flip

Flips the output horizontally (left to right, and right to left, see Figure 17).

Vertical Flip

Flips the output vertically (top to bottom and bottom to top, see Figure 17).

Figure 17. Flip and Rotation Illustration

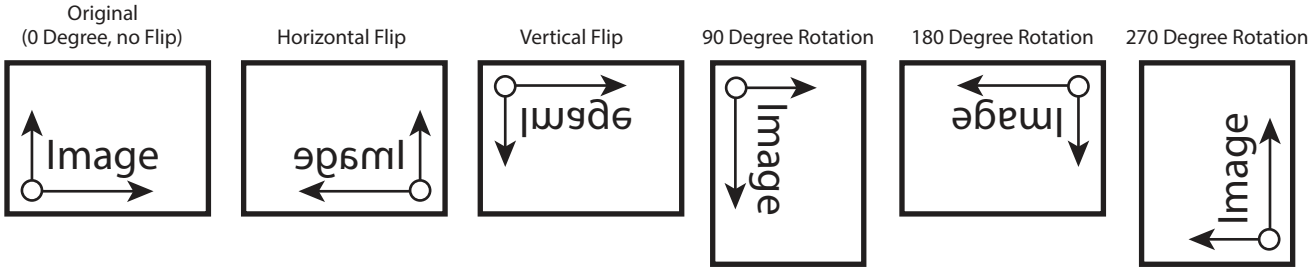

About the Rotation, Flip, and Frame Delay Controls

Rotation and Flip image processing requires one frame of video delay. Whenever a rotation or flip occurs a frame delay is automatically applied, and the Frame Delay On status is reported, even if the checkbox isn't selected (see Figure 18).

Figure 18. Frame Delay Automatically On with Rotation

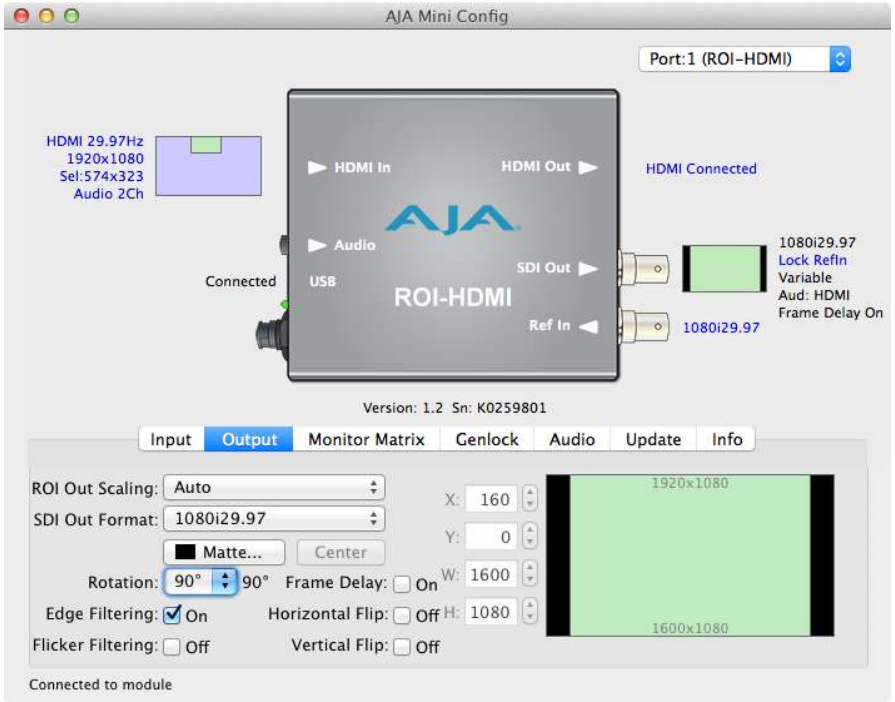

The Rotation, Flip, and Delay controls all report their current statuses. Some specific combinations of input and output selections and 180° rotations or flips involving 1920x 1080i input video can exceed the processing capacity of the ROI Mini-Converter. In these unusual cases, a Processing Limit Exceeded red error message is displayed on the UI, and the actual current settings for Rotation, Frame Delay, and Flip are reported in red (see Figure 19).

Figure 19. Processing Limit Exceeded

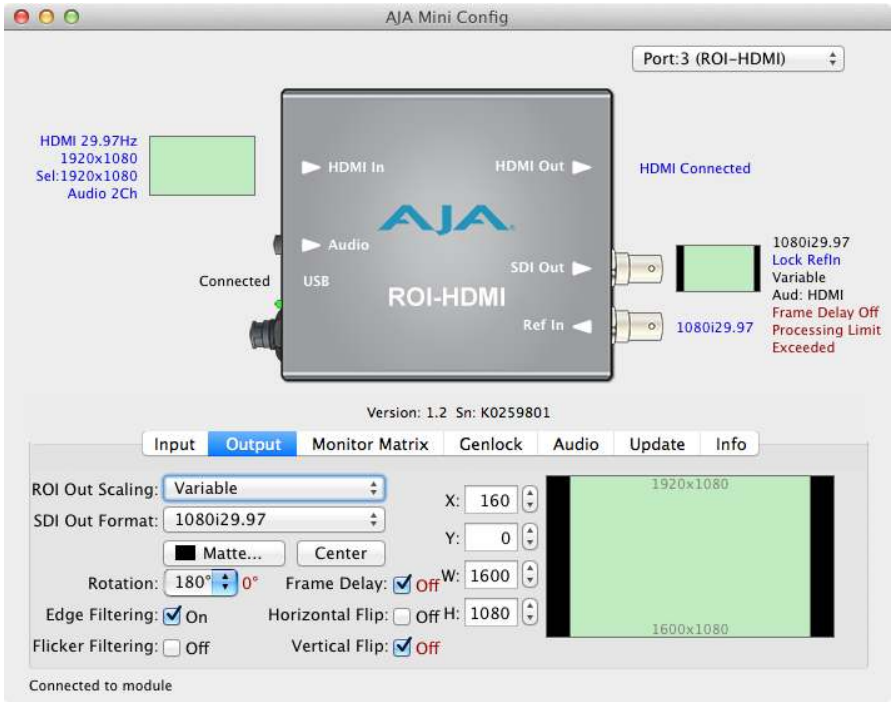

Possible workarounds for this error condition include:

- Select an input source format that is not 1920x1080i.
- Reduce the size of the input or output region of interest.
- Deselect 180° rotation if on.

HDMI Screen (applicable only to ROI-SDI model)

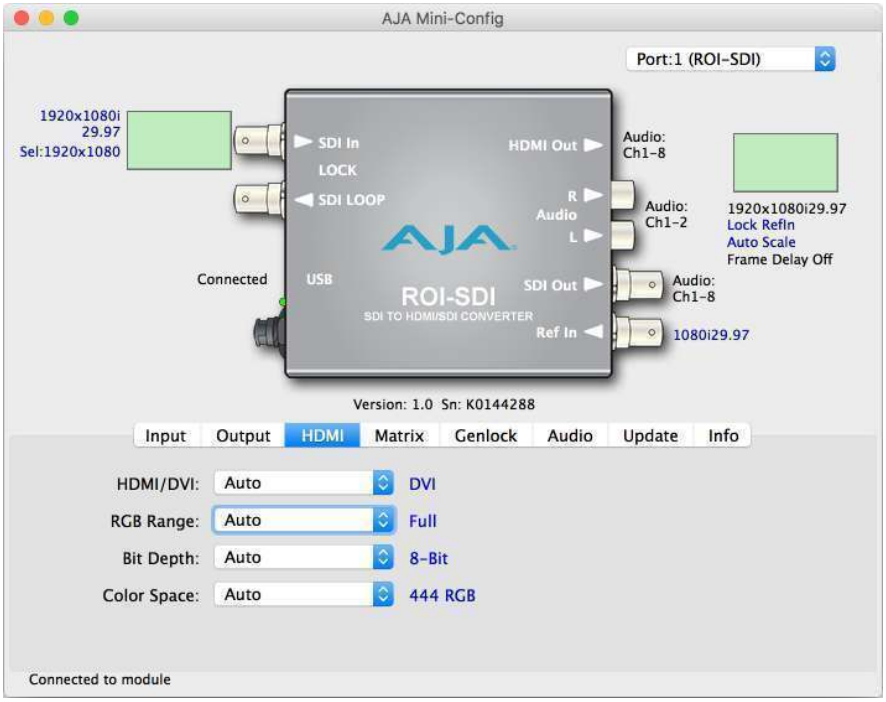

Click on the HDMI Tab to view and make changes to the following ROI-SDI HDMI Output settings.

HDMI/DVI

Choose Auto, HDMI, or DVI. When DVI is selected, any audio signals present are not passed. Choosing "Auto" automatically selects the output mode based on the attached device's capabilities.

RGB Range

Choose Auto, SMPTE or Full. Choosing "Auto" automatically selects the RGB output color range setting.

Bit Depth

Choose from Auto, 8-bit, or 10-bit. Choosing "Auto" automatically selects the bit depth based on the input video and the attached device's capabilities.

Color Space

Selects the desired HDMI output video format. Choose from the following:

- Auto - selects the video format based on the input video and the attached device's capabilities.
- 4:2:2 YCbCr
- 4:4:4 RGB
- 4:4:4 YCbCr

Monitor Matrix Screen

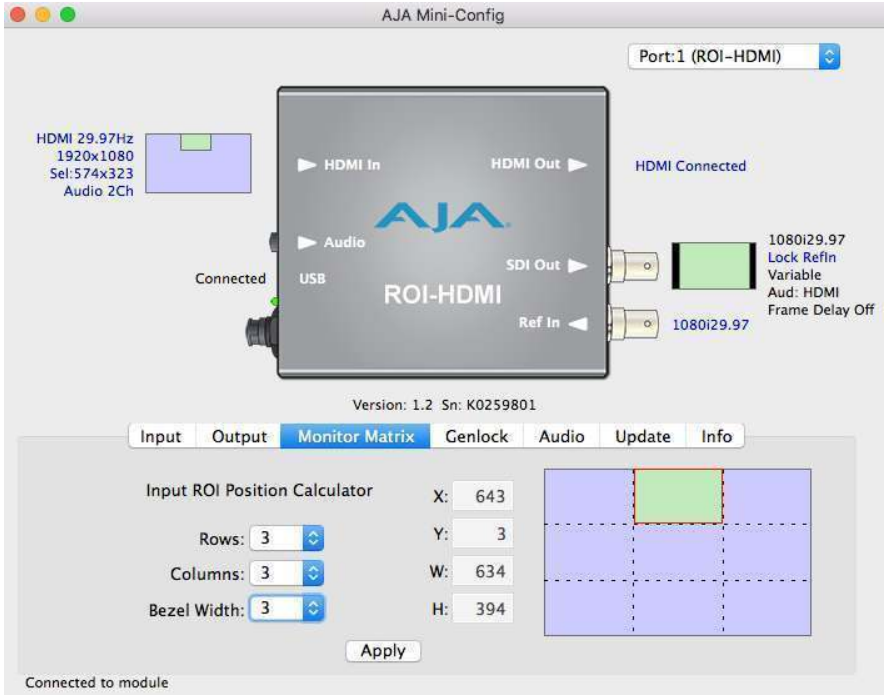

The Monitor Matrix screen offers a calculator that lets you easily define Input Region of Interest dimensions suitable for a multiple monitor matrix display. Typically a monitor matrix is a horizontal and vertical stacking of monitors, with a physical bezel distance separating the edges of the displays from each other. Dedicating one ROI to feed each monitor, and sending the same input video to all the ROIs, makes it possible to display that video so it spans across all the monitors.

Monitor Matrix Representation

A representation of the monitor matrix is shown in the Proxy Screen on the lower right. Clicking selects the area of the monitor at that location in the matrix. When row and column values are entered, a graphical representation of a matrix will be displayed. A default monitor position will be shown as yellow. A new monitor position can be selected by moving the mouse cursor over the desired position and selecting it. The Input Region of Interest position (X,Y) and size (W,H) values will then be automatically calculated. When Apply is clicked, the monitor position rectangle will turn green. When a non-zero Bezel Width is entered, the bezel border around that area is colored red.

Rows

Select the number of rows in the monitor matrix. Select from 1 to 20.

Columns

Select the number of columns in the monitor matrix. Select from 1 to 20.

Bezel Width

Select the bezel width of the display. This width will be used in calculating the Input Region of Interest.

Note that adjoining displays could have a different bezel width and require a different value entered on the ROI driving that monitor.

X, Y, W, H

The currently calculated Input Region of Interest position (X,Y) and size (W,H) are displayed here. These values are grayed out and cannot be adjusted. Once the values are applied, they can be adjusted on the Input tab.

Apply

Click on the Apply button to transfer the current Input Region of Interest dimensions to the Input screen.

Genlock Screen

The Genlock screens vary depending on the ROI model.

ROI-HDMI and ROI-DVI Genlock Screen

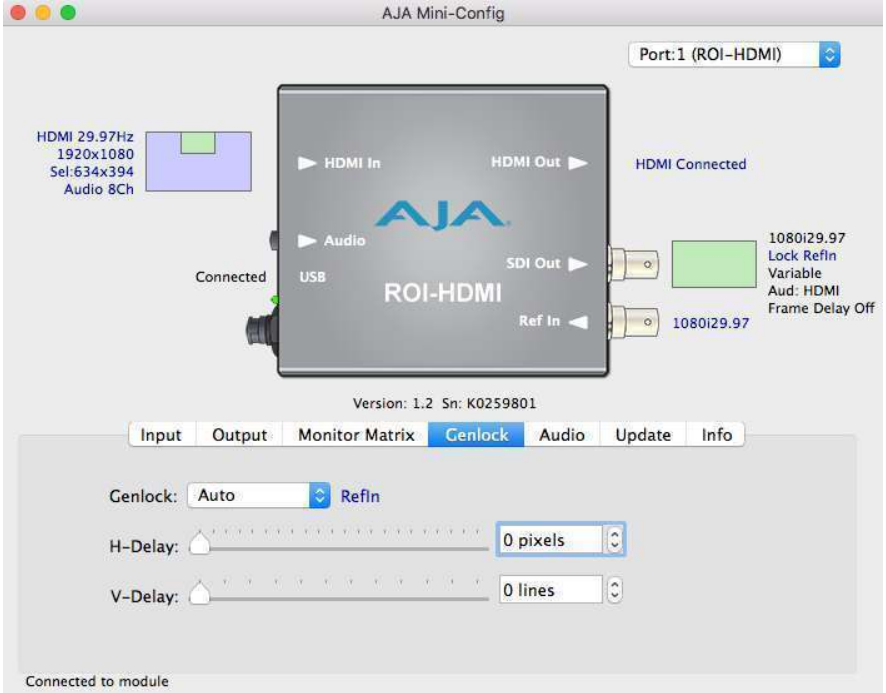

Genlock

The Genlock control offers the following options:

- Auto – use Ref Input if present, then Input signal if valid, then free-run
- Free-run – Lock to internal clock
- Ref In – Lock to the Video Reference input
- HDMI – Lock to the HDMI/DVI Input (if valid video rate)

NOTE: When HDMI is selected, ROI can lock to input formats that have a SMPTE raster and frame rate and are within 50 ppm of the SDI output format.

NOTE: The actual resultant Genlock status is reported to the right of the selection menu.

H-Delay and V-Delay

These controls let you adjust H and V delay from the sync input by dragging the slider or entering values in the windows on the right. Horizontal delay is entered in pixels, while Vertical delay is entered in lines.

NOTE: H and V delay adjustments are only available when the SDI Out Format is compatible with the current sync input reference.

ROI-SDI Genlock Screen

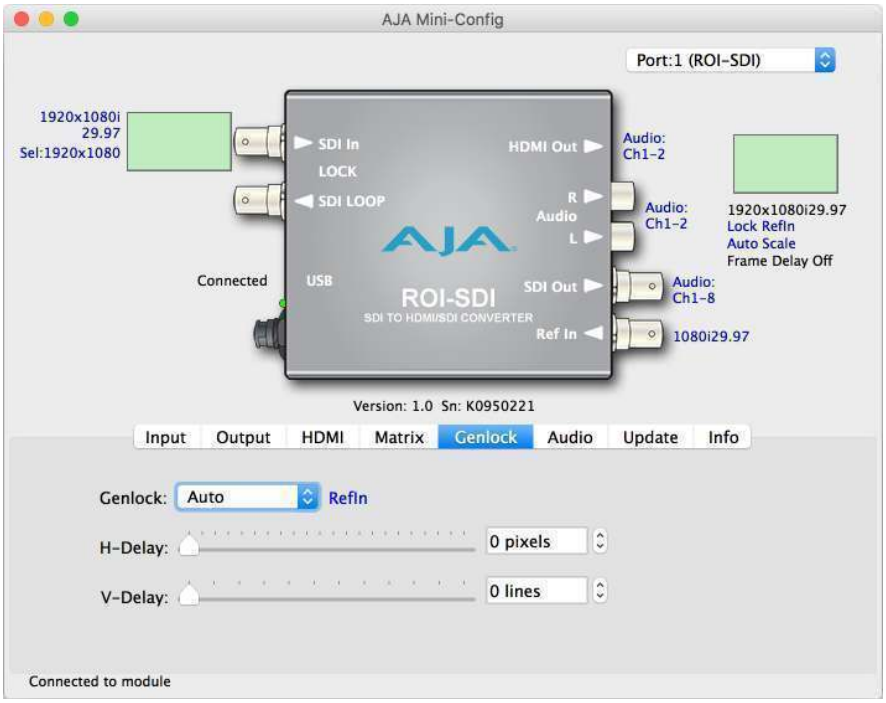

Genlock

The Genlock control offers the following options:

- Auto – use Ref Input if present, then Input signal if valid, then free-run
- Free-run – Lock to internal clock
- Ref In – Lock to the Video Reference input
- SDI – Lock to the SDI Input (if valid video rate)

NOTE: When SDI is selected, ROI can lock to input formats that have a SMPTE raster and frame rate and are within 50 ppm of the SDI output format.

NOTE: The actual resultant Genlock status is reported to the right of the selection menu.

H-Delay and V-Delay

These controls let you adjust H and V delay from the sync input by dragging the slider or entering values in the windows on the right. Horizontal delay is entered in pixels, while Vertical delay is entered in lines.

NOTE: H and V delay adjustments are only available when the SDI Out Format is compatible with the current sync input reference.

ROI-DP Genlock Screen

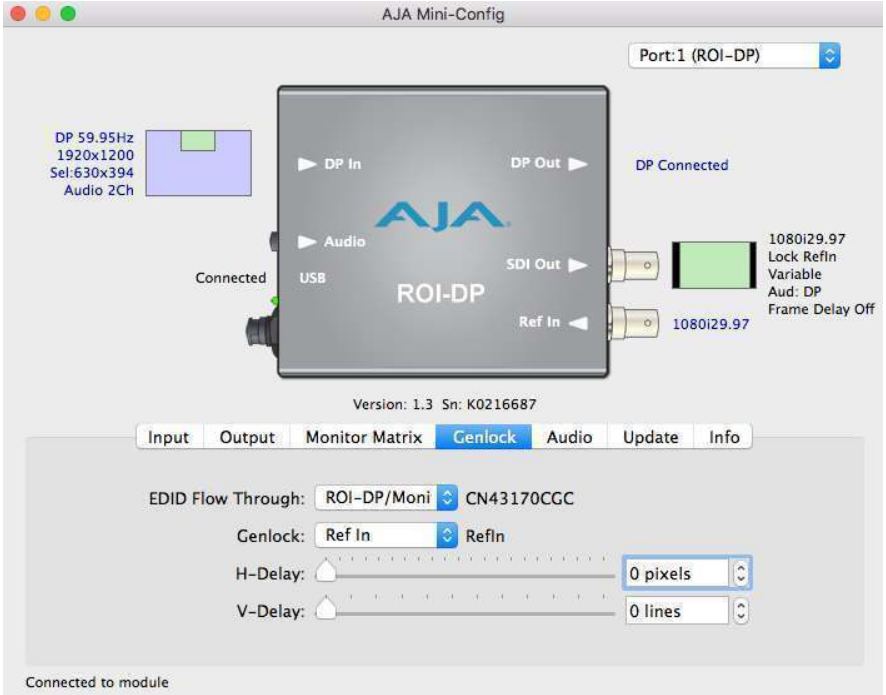

EDID Flow Through

The EDID Flow Through setting selects what EDID (Extended Display Identification Data) is provided to the upstream source (i.e., a connected computer). EDID is used by the source to determine what resolution and format to output on the monitor connector. You can select the EDID originating from the ROI itself, or the EDID from a downstream device connected to the ROI output monitor connector.

- ROI-DP – The upstream source sees only the EDID of the ROI.
- ROI/Monitor – The upstream source sees the downstream device's EDID if a device is connected to the output monitor connector (HDMI, DP, DVI), otherwise the source sees the EDID of the ROI.

This control is useful if, for example, a 4K monitor is connected to the ROI monitor output connector, in which case the pixel clock rate might be higher than the ROI can process, resulting in a red matte on the SDI output. Choosing the "ROI-DP" EDID Flow Through setting can solve that problem. This setting replaces the downstream device's EDID with the ROI EDID. The source should then renegotiate a display format that is within the operating range of the ROI.

Genlock

The Genlock control offers the following options:

- Free-run – Lock to internal clock
- Ref In – Lock to the Video Reference input

NOTE: The actual resultant Genlock status is reported to the right of the selection menu.

H-Delay and V-Delay

These controls let you adjust H and V delay from the sync input, by dragging the slider or entering values in the windows on the right. Horizontal delay is entered in pixels, while Vertical delay is entered in lines.

NOTE: H and V delay adjustments are only available when the SDI Out Format is compatible with the current sync input reference.

Audio Screen

The Audio screens vary depending on the ROI model.

ROI-HDMI and ROI-DVI Audio Screen

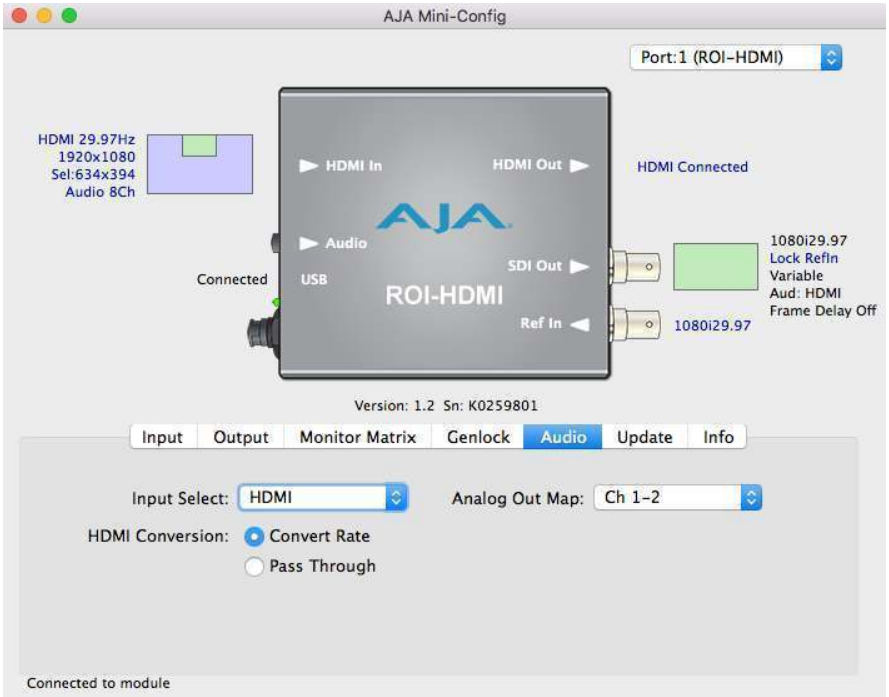

In default mode, the ROI passes up to eight channels of embedded audio from the HDMI or DVI input to the SDI output, and mutes embedded audio to the HDMI or DVI output.

NOTE: The ROI-DVI model can receive both DVI and HDMI protocol input, and accepts audio if it is embedded in an HDMI signal. However, the DVI protocol does not carry audio, so if the ROI-DVI is receiving DVI input, only analog audio can be embedded to the output.

Input Select

Use this control to select which input audio to pass to the SDI output.

- HDMI - This selection passes the HDMI incoming audio to the SDI output (up to 8 channels).
- Analog- This selection passes only the Analog audio input for inclusion into the SDI audio stream. In this case, you can use the *Analog Out Map* pulldown menu to select the specific channel pair you want to carry the signal.
- Analog + HDMI - This selection causes the Analog audio input to replace one pair of the HDMI audio channels on the SDI output. The analog audio is inserted on the channels defined by the Analog Out Map pulldown.
- None - No audio is output (mute) on the SDI output.

HDMI Conversion

The *Convert Rate* button enables ROI Series to convert incoming HDMI audio between 32 kHz to 96 kHz to 48 kHz (the SDI native audio standard). If you don't want to convert, choose Pass Through.

Analog Out Map

This control selects which two SDI embedded audio channels receive the incoming L R analog audio when Embed into SDI is set to Analog or Analog + HDMI. Choose from Ch 1-2, Ch 3-4, Ch 5-6, or Ch 7-8.

ROI-DP Audio Screen

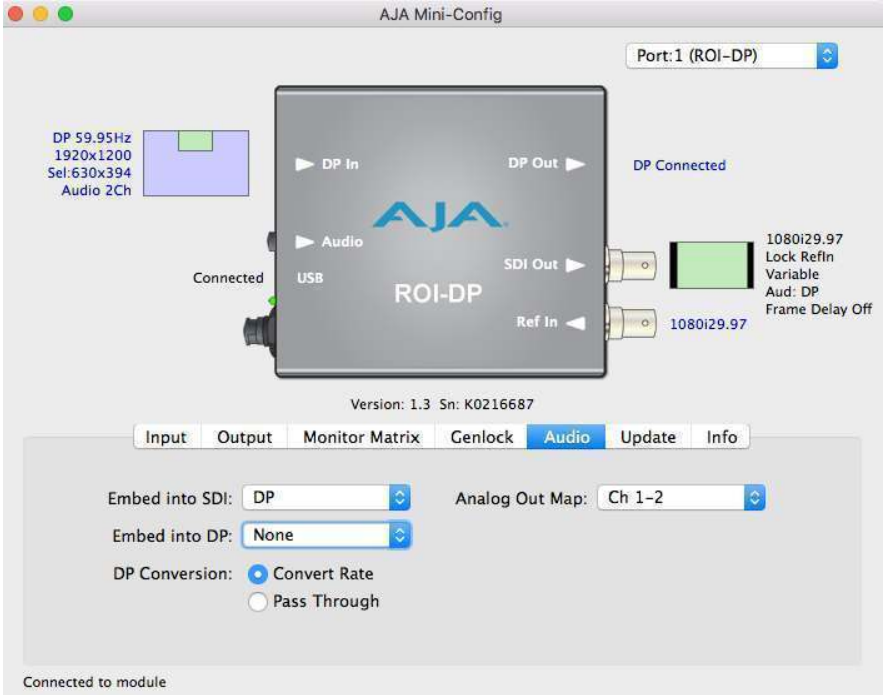

In default mode, the ROI passes up to eight channels of embedded audio from the DisplayPort input to the SDI output, and mutes embedded audio to the DisplayPort output.

Embed into SDI

Use this control to select which input audio is passed to the SDI output.

- DP - This selection passes the DisplayPort incoming audio to the SDI output (up to 8 channels).
- Analog - This selection passes only the Analog audio input for inclusion into the SDI audio stream. In this case, you can use the *Analog Out Map* pulldown menu to select the specific channel pair you want to carry the signal.
- Analog + DP - This selection causes the Analog audio input to replace one pair of the DisplayPort audio channels on the SDI output. The analog audio is inserted on the channels defined by the Analog Out Map pulldown.
- None - No audio is output (mute) on the SDI output.

Embed into DP

Use this control to select which input audio is passed to the DisplayPort output.

- None - No audio is output (mute) on the DisplayPort output.

- DP - The DisplayPort incoming audio passes to the DisplayPort output (up to 8 channels).

DP Conversion

The *Convert Rate* button enables ROI Series to convert incoming DisplayPort audio between 32 kHz to 96 kHz to 48 kHz (the SDI native audio standard). If you don't want to convert, choose *Pass Through*.

Analog Out Map

This control selects which two SDI embedded audio channels receive the incoming L R analog audio when Embed into SDI is set to *Analog* or *Analog + DP*. Choose from *Ch 1-2, Ch 3-4, Ch 5-6*, or *Ch 7-8*.

ROI-SDI Audio Screen

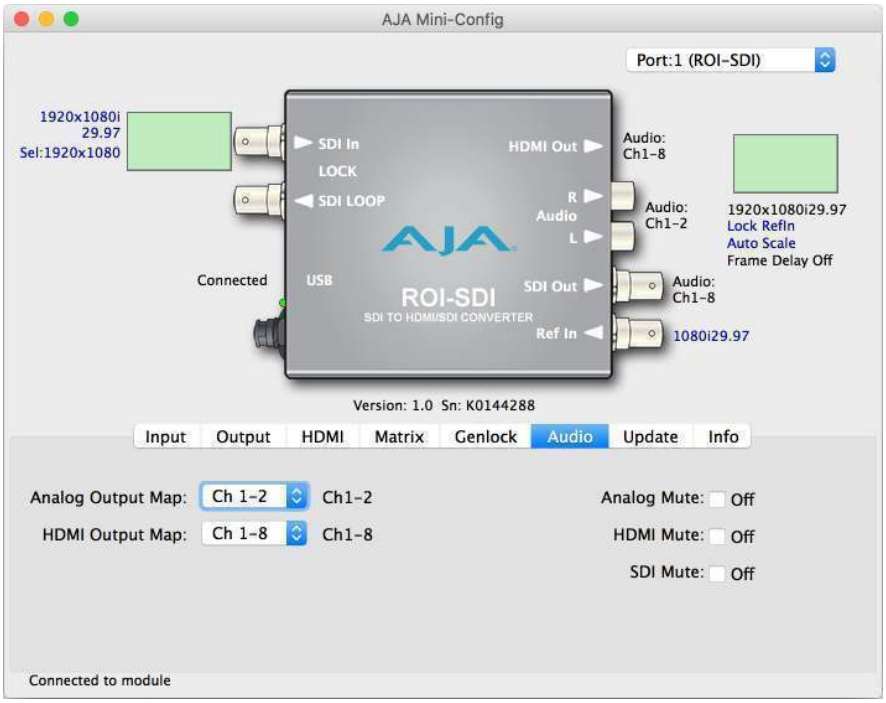

Analog Output Map

This control selects which two SDI embedded audio channels, when present, are sent to the outgoing L R analog audio outputs. Choose from *Ch 1-2, Ch 3-4, Ch 5-6*, or *Ch 7-8*.

HDMI Output Map

This control selects which SDI embedded audio channels, when present, are embedded in the HDMI output. Choose from *Ch 1-8 (default), Ch 1-2, Ch 3-4, Ch 5-6*, or *Ch 7-8*.

Analog Mute

Select the Analog Mute checkbox to mute the audio that is being sent to the L R analog audio outputs.

HDMI Mute

Select the HDMI Mute checkbox to mute the audio that is being sent to the HDMI output.

SDI Mute

Select the SDI Mute checkbox to mute the audio on the processed SDI output.

Update Screen

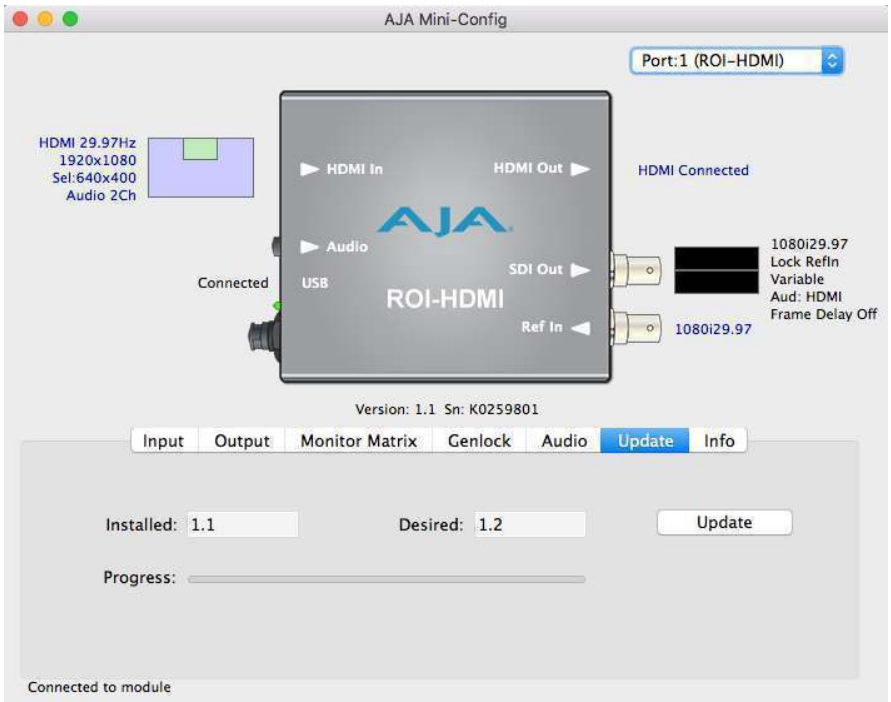

Use this Update screen to view the software version currently installed on the converter or install new software.

NOTE: When discussing Mini-Converters, "Firmware" is software that will be stored in the Mini-Converter's non-volatile memory and used when it is powered up. This is something different than the Mini-Config application software. The version numbers shown in the Update screen refer only to the firmware.

Installed

This field shows the version of the firmware currently installed inside the Mini-Converter.

Desired

This field shows the version of firmware embedded in the Mini-Config application which you can install into the Mini-Converter by clicking the Update button.

Update

This button initiates a software update operation loading the "Desired" version of firmware into the Mini-Converter's non-volatile memory.

Progress

This indicator bar shows the progress of firmware installation.

Software Update Procedure

1. Check the AJA website for new Mini-Config software for your Mini-Converter. If new software is found, download it and uncompress the file archive (zip). Here is the URL to use when checking:

   http://www.aja.com/en/products/mini-converters/mini-config-software

2. Connect the Mini-Converter to a Mac or PC via a USB port on the computer and run the new Mini-Config software just downloaded.
3. Click on the Update tab screen.
4. Check the Installed version level against the Desired version level. If the Desired is newer, then click the *Update* button to download the new firmware to the Mini-Converter; progress will be shown via the "Progress" thermometer bar.

Info Tab Screen

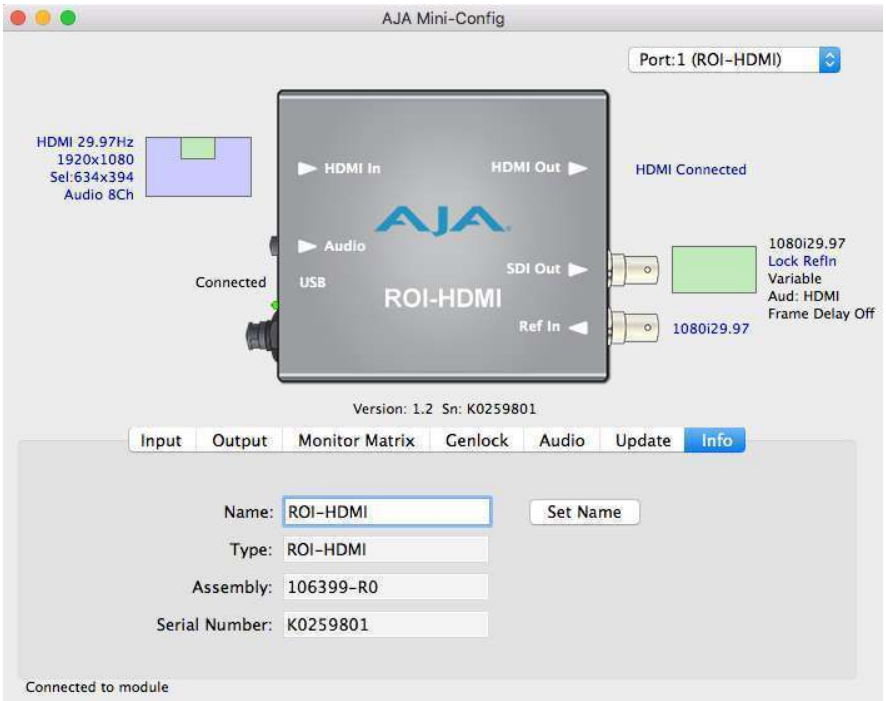

This screen provides basic information about the Mini-Converter. This information is mostly useful when calling AJA Support for service or technical support.

Name

This field allows you to give your Mini-Converter a name. This can be useful if you have several Mini-Converters attached to a Mac/PC via USB so you can distinguish between them easily (especially if they're the same model).

Type

This is the factory set model name of the Mini-Converter.

Assembly

This is the factory assembly number.

Serial Number

This is the factory set unique serial number of your Mini-Converter. If you ever call AJA Support for service, you may be asked for this number.

Appendix A – Specifications

ROI-HDMI Specifications

Video Input Formats

- Computer Signals:
  - WUXGA (1920 x 1200) 60 Hz max
  - VGA (640 x 480) minimum

NOTE: Frame rates limited by the 166 mHz max pixel rate of the HDMI receiver.

- Video Signals:
  - (HD) 1920 x 1080i 25, 29.97
  - (HD) 1920 x 1080p 23.98, 24, 25, 29.97, 30, 50, 59.94, 60
  - (HD) 1280 x 720p 23.98, 24, 25, 29.97, 30, 50, 59.94, 60
  - (SD) 625i, 525i
  - (SD) 580p, 480p

Video Output Formats

- (HD) 1920 x 1080p 50, 59.94, 60 - SMPTE 425-1 Level A mapping structure 1 (4:2:2 10-bit YCbCr)
- (HD) 1920 x 1080p 23.98, 24, 25, 29.97, 30
- (HD) 1920 x 1080i 25, 29.97
- (HD) 1280 x 720p 50, 59.94, 60
- (SD) 625i 25
- (SD) 525i 29.97

Color Range

- Full
- SMPTE

Reference Input

- Permissible reference video inputs include:
  - 1080i tri-level sync
  - 1080p tri-level sync
  - 720p tri-level sync
  - PAL 625 bi-level sync
  - NTSC 525 bi-level sync

Video Input

- 1 x HDMI input connector (with embedded audio, up to 8 channels)

Video Outputs

- HDMI
  - 1 x HDMI loop through connector (with embedded audio, up to 8 channels)
- SDI
  - 3G-SDI, SMPTE-259/292/424, 1 x BNC

HDCP

- ROI-HDMI does not encode the HDMI output with HDCP encryption
- ROI-HDMI does not accept HDCP input

Audio Inputs

- 1 x Analog 3.5mm TRS, 2-Channel
- HDMI embedded audio, 24-bit, 8-Channel

Audio Output

- SDI embedded audio, 24-bit, 2-Channel or 8-Channel

User Controls

- USB port used with supplied cable and Mini-Config software application to configure device via Mac or Windows

Size (w x d x h)

- 5.765" x 4.02" x 0.9" (146.431mm x 102.108mm x 22.86mm)

Weight

- 0.6 lb (0.3 kg)

Power

- Uses AJA power supply model DWP-U-R1, included with purchase
- 100-240V, 50/60 Hz Universal input
- +5 to 20V DC regulated, 8 watts max

Environment

- Safe Operating Temperature: 0 to 40 degrees C (32 to 104 degrees F)
- Safe Storage Temperature (Power OFF): -40 to 60 degrees C (-40 to 140 degrees F)
- Operating Relative Humidity: 10-90% noncondensing
- Operating Altitude: <3,000 meters (<10,000 feet)

ROI-DP Specifications

Video Input Formats

- Computer Signals:

- WUXGA (1920 x 1200) 60 Hz max
- VGA (640 x 480) minimum

NOTE: Frame rates limited by the 166 mHz max pixel rate of the DP receiver

- Video Signals:
  - (HD) 1920 x 1080i 25, 29.97
  - (HD) 1920 x 1080p 23.98, 24, 25, 29.97, 30, 50, 59.94, 60
  - (HD) 1280 x 720p 23.98, 24, 25, 29.97, 30, 50, 59.94, 60
  - (SD) 625i, 525i
  - (SD) 480p, 580p

Video Output Formats

- (HD) 1920 x 1080p 50, 59.94, 60 - SMPTE 425-1 Level A mapping structure 1 (4:2:2 10-bit YCbCr)
- (HD) 1920 x 1080p 23.98, 24, 25, 29.97, 30
- (HD) 1920 x 1080i 25, 29.97
- (HD) 1280 x 720p 50, 59.94, 60
- (SD) 625i 25
- (SD) 525i 29.97

Color Range

- Full
- SMPTE

Reference Input

- Permissible reference video inputs include:
  - 1080i tri-level sync
  - 1080p tri-level sync
  - 720p tri-level sync
  - PAL 625 bi-level sync
  - NTSC 525 bi-level sync

Video Input

- 1x DisplayPort 1.1a input connector

Video Outputs

- DisplayPort
  - 1 x DisplayPort pass through connector
- SDI
  - 3G-SDI, SMPTE-259/292/424, 1 x BNC

HDCP

- ROI-DP does not encode the DisplayPort output with HDCP encryption
- ROI-DP does not accept HDCP input

Audio Inputs

- 1 x Analog 3.5mm TRS, 2-Channel

- DisplayPort embedded audio, 24-bit, 8-Channel

Audio Output

- SDI embedded audio, 24-bit, 2-Channel or 8-Channel
- DisplayPort embedded audio, 24-bit, 8-Channel

User Controls

- USB port used with supplied cable and Mini-Config software application to configure device via Mac or Windows

Size (w x d x h)

- 5.765" x 4.020" x 0.9" (146.431mm x 102.108mm x 22.86mm)

Weight

- 0.5 lb (0.3 kg)

Power

- Uses AJA power supply model DWP-U-R1 (included with purchase)
- 100-240V, 50/60 Hz Universal Input
- +5 to 20V DC regulated, 7 watts max

Environment

- Safe Operating Temperature: 0 to 40 degrees C (32 to 104 degrees F)
- Safe Storage Temperature (Power OFF): -40 to 60 degrees C (-40 to 140 degrees F)
- Operating Relative Humidity: 10-90% noncondensing
- Operating Altitude: <3,000 meters (<10,000 feet)

ROI-DVI Specifications

Video Input Formats

- Computer Signals:
  - WUXGA (1920 x 1200) 60 Hz max
  - VGA (640 x 480) minimum

NOTE: Frame rates limited by the 166 mHz max pixel rate of the DVI Rx.

- Video Signals:
  - (HD) 1920 x 1080p 23.98, 24, 25, 29.97, 30, 50, 59.94, 60
  - (HD) 1920 x 1080i 50, 59.94
  - (HD) 1280 x 720p 23.98, 24, 25, 29.97, 30, 50, 59.94, 60
  - (SD) 525i, 625i
  - (SD) 480p, 576p (DSLR cameras)

Video Output Formats

- (HD) 1920 x 1080p 50, 59.94, 60 - SMPTE 425-1 Level A Mapping structure 1 (1920 x 1080 4:2:2 10-bit YCbCr)
- (HD) 1920 x 1080p 23.98, 24, 25, 29.97, 30
- (HD) 1920 x 1080i 25, 29.97, 30
- (SD) 1280 x 720p 50, 59.94, 60
- (SD) 625i 25
- (SD) 525i 29.97

Input Data Range Control

- 1-255 (default – 8-bit nomenclature)
- 16-235

Reference Input

- Permissible reference video inputs include:
  - 1080i tri-level sync
  - 1080p tri-level sync
  - 720p tri-level sync
  - 625 Color Black
  - 525 Color Black

Video Input

- 1x DVI-D input connector

Video Outputs

- DVI
  - 1 x DVI-D loop through connector
- SDI
  - 3G-SDI, SMPTE-259/292/296/424/425, 1 x BNC

HDCP

- ROI does not encode the HDMI output with HDCP encryption
- ROI does not accept HDCP input

Audio Inputs

- 1 x Analog 3.5mm TRS, 2-Channel
- HDMI embedded audio, 24-bit, 8-Channel

Audio Output

- SDI embedded audio, 24-bit, 2-Channel or 8-Channel

User Controls

- USB port used with supplied cable and Mini-Config software application to configure device via Mac or Windows

Size (w x d x h)

- 5.765" x 4.020" x 0.9" (146.431mm x 102.108mm x 22.86mm)

Weight

- 0.6 lb (0.3 kg)

Power

- Uses AJA power supply model DWP-U-R1, included with purchase
- 100-240V, 50/60 Hz universal input
- +5 to 20V DC regulated, 8 watts max

Environment

- Safe Operating Temperature: 0 to 40 degrees C (32 to 104 degrees F)
- Safe Storage Temperature (Power OFF): -40 to 60 degrees C (-40 to 140 degrees F)
- Operating Relative Humidity: 10-90% noncondensing
- Operating Altitude: <3,000 meters (<10,000 feet)

ROI-SDI Specifications

Video Formats

- (HD) 1920 x 1080p 23.98, 24, 25, 29.97, 30, 50, 59.94, 60
- (HD) 1920 x 1080i 25, 29.97, 30
- (SD) 1280 x 720p 50, 59.94, 60
- (SD) 625i 25
- (SD) 525i 29.97

Reference Input

- Supported reference video inputs include:
  - 1080i tri-level sync
  - 1080p tri-level sync
  - 720p tri-level sync
  - 625i Color Black
  - 525i Color Black

Video Input

- 1 x 3G-SDI BNC, SMPTE-259/292/424

Video Outputs

- 1 x 3G-SDI BNC, loop through
- 1 x 3G-SDI BNC, SMPTE-259/292/424
- 1 x HDMI Type A, HDMI v1.4

HDCP

- ROI does not encode the HDMI output with HDCP encryption

Audio Output Digital

- SDI embedded audio, 24-bit, 8-Channel
- HDMI embedded audio, 24-bit, 2-Channel or 8-Channel

Audio Output Analog

- 2 x Analog RCA Jack, 2-Channel

User Controls

- USB port used with supplied cable and Mini-Config software application to configure device via Mac or Windows

Size (w x d x h)

- 5.765" x 4.02" x 0.9" (146.431mm x 102.108mm x 22.86mm)

Weight

- 0.6 lb (0.3 kg)

Power

- Uses AJA power supply model DWP-U-R1 (included with purchase)
- 100-240V, 50/60 Hz universal input
- 5-20V DC regulated, 7 watts max

Environment

- Safe Operating Temperature: 0 to 40 degrees C (32 to 104 degrees F)
- Safe Storage Temperature (Power OFF): -40 to 60 degrees C (-40 to 140 degrees F)
- Operating Relative Humidity: 10-90% noncondensing
- Operating Altitude: <3,000 meters (<10,000 feet)

Appendix B – Safety & Compliance

Federal Communications Commission (FCC) Compliance Notices

Class A Interference Statement

This equipment has been tested and found to comply with the limits for a Class A digital device, pursuant to Part 15, Subpart B of the FCC Rules. These limits are designed to provide reasonable protection against harmful interference in a residential installation. This equipment generates, uses, and can radiate radio frequency energy and, if not installed and used in accordance with the instructions, may cause harmful interference to radio communications. However, there is no guarantee that interference will not occur in a particular installation. If this equipment does cause harmful interference to radio or television reception, which can be determined by turning the equipment off and on, the user is encouraged to try to correct the interference by one or more of the following measures:

- Reorient or relocate the receiving antenna.
- Increase the separation between the equipment and receiver.
- Connect the equipment into an outlet on a circuit different from that to which the receiver is connected.
- Consult the dealer or an experienced radio/TV technician for help.

FCC Caution

This device complies with Part 15 of the FCC Rules. Operation is subject to the following two conditions: (1) This device may not cause harmful interference, and (2) this device must accept any interference received, including interference that may cause undesired operation.

Canadian ICES Statement

Canadian Department of Communications Radio Interference Regulations

This digital apparatus does not exceed the Class A limits for radio-noise emissions from a digital apparatus as set out in the Radio Interference Regulations of the Canadian Department of Communications. This Class A digital apparatus complies with Canadian ICES-003.

Règlement sur le brouillage radioélectrique du ministère des Communications

Cet appareil numérique respecte les limites de bruits radioélectriques visant les appareils numériques de classe A prescrites dans le Règlement sur le brouillage radioélectrique du ministère des Communications du Canada. Cet appareil numérique de la Classe A est conforme à la norme NMB-003 du Canada.

European Union and European Free Trade Association (EFTA) Regulatory Compliance

This equipment may be operated in the countries that comprise the member countries of the European Union and the European Free Trade Association. These countries, listed in the following paragraph, are referred to as The European Community throughout this document:

AUSTRIA, BELGIUM, BULGARIA, CYPRUS, CZECH REPUBLIC, DENMARK, ESTONIA, FINLAND, FRANCE, GERMANY, GREECE, HUNGARY, IRELAND, ITALY, LATVIA, LITHUANIA, LUXEMBOURG, MALTA, NETHERLANDS, POLAND, PORTUGAL, ROMANIA, SLOVAKIA, SLOVENIA, SPAIN, SWEDEN, UNITED KINGDOM, ICELAND, LICHTENSTEIN, NORWAY, SWITZERLAND

Declaration of Conformity

Marking by this symbol indicates compliance with the Essential Requirements of the EMC Directive of the European Union 2014/30/EU.

CE This equipment meets the following conformance standards:

Safety

EN 60065: 2002 + A1: 2006 + A11: 2008 + A2: 2010 + A12: 2011 (GS License)

IEC 60065: 2001 + A1: 2005 + A2: 2010 (CB Scheme Report/Certificate)

Additional licenses issued for specific countries available on request.

Emissions

EN 55032: 2012, CISPR 22: 2008, EN 55022: 2010, EN 61000-3-2: 2014, EN 61000-3-3: 2013

Immunity

EN 55103-2: 2009, EN 61000-4-2:2009, EN 61000-4-3:2006+A1:2008+A2:2010,

EN 61000-4-4:2004+A1:2010, EN 61000-4-5:2006, EN 61000-4-6:2009, EN 61000-4-11:2004

Environments: E2, E3 and E4

The product is also licensed for additional country specific standards as required for the International Marketplace.

Warning! This is a Class A product. In a domestic environment, this product may cause radio interference, in which case, the user may be required to take appropriate measures.

Achtung! Dieses ist ein Gerät der Funkstörgrenzwertklasse A. In Wohnbereichen können bei Betrieb dieses Gerätes Rundfunkstörungen auftreten, in welchen Fällen der Benutzer für entsprechende Gegenmaßnahmen verantwortlich ist.

Attention! Ceci est un produit de Classe A. Dans un environnement domestique, ce produit risque de créer des interférences radioélectriques, il appartiendra alors à l?utilisateur de prendre les mesures spécifiques appropriées..

Recycling Notice

This symbol on the product or its packaging indicates that this product must not be disposed of with your other household waste. Instead, it is your responsibility to dispose of your waste equipment by handing it over to a designated collection point for the recycling of waste electrical and electronic equipment. The separate collection and recycling of your waste equipment at the time of disposal will help conserve natural resources and ensure that it is recycled in a manner that protects human health and the environment. For more information about where you can drop off your waste for recycling, please contact your local authority, or where you purchased your product.

Korean KCC Compliance Statement

A급 기기 (업무용 방송통신기자재)	이 기기는 업무용(A급) 전자파적합기기로서 판매자 또는 사용자는 이 점을 주의하시기 바라며, 가정외의 지역에서 사용하는 것을 목적으로 합니다.
Class A (Broadcasting Communication Equipment for Office Use)	As an electromagnetic wave equipment for office use (Class A), this equipment is intended to use in other than home area. Sellers or users need to take note of this.

Taiwan Compliance Statement

警告使用者：
這是甲類的資訊產品，在居住的環境中使用時，可能會造成射頻干擾，在這種情況下，使用者會被要求採取某些適當的對策。

This is a Class A product based on the standard of the Bureau of Standards, Metrology and Inspection (BSMI) CNS 13438, Class A. In a domestic environment this product may cause radio interference in which case the user may be required to take adequate measures.

Japanese Compliance Statement

この装置は、クラスＡ情報技術装置です。この装置を家庭環境で使用すると電波妨害を引き起こすことがあります。この場合には使用者が適切な対策を講ずるよう要求されることがあります。 ＶＣＣＩ－Ａ

This is a Class A product based on the standard of the VCCI Council (VCCI V-3/2015.04). If this equipment is used in a domestic environment, radio interference may occur, in which case, the user may be required to take corrective actions.

Translated Warning and Caution Messages

The following caution statements, warning conventions, and warning messages apply to this product and manual.

Warning Symbol

Caution Symbol

Before Operation Please Read These Instructions

Warning! Read and follow all warning notices and instructions marked on the product or included in the documentation.

Avertissement! Lisez et conformez-vous à tous les avis et instructions d'avertissement indiqués sur le produit ou dans la documentation.

Warnung! Lesen und befolgen Sie die Warnhinweise und Anweisungen, die auf dem Produkt angebracht oder in der Dokumentation enthalten sind.

¡Advertencia! Lea y siga todas las instrucciones y advertencias marcadas en el producto o incluidas en la documentación.

Aviso! Leia e siga todos os avisos e instruções assinalados no produto ou incluídos na documentação.

Avviso! Leggere e seguire tutti gli avvisi e le istruzioni presenti sul prodotto o inclusi nella documentazione.

Warning! Do not use this device near water and clean only with a dry cloth.

Avertissement! N'utilisez pas cet appareil près de l'eau et nettoyez-le seulement avec un tissu sec..

Warnung! Das Gerät nicht in der Nähe von Wasser verwenden und nur mit einem trockenen Tuch säubern.

¡Advertencia! No utilice este dispositivo cerca del agua y límpielo solamente con un paño seco.

Aviso! Não utilize este dispositivo perto da água e limpe-o somente com um pano seco.

Avviso! Non utilizzare questo dispositivo vicino all'acqua e pulirlo soltanto con un panno asciutto.

Warning! Do not block any ventilation openings. Install in accordance with the manufacturer's instructions.

Avertissement! Ne bloquez aucune ouverture de ventilation. Suivez les instructions du fabricant lors de l'installation.

Warnung! Die Lüftungsöffnungen dürfen nicht blockiert werden. Nur gemäß den Anweisungen des Herstellers installieren.

¡Advertencia! No bloquee ninguna de las aberturas de la ventilación. Instale de acuerdo con las instrucciones del fabricante.

Aviso! Não obstrua nenhuma das aberturas de ventilação. Instale de acordo com as instruções do fabricante.

Avviso! Non ostruire le aperture di ventilazione. Installare in conformità con le istruzioni del fornitore.

Warning! Do not install near any heat sources such as radiators, heat registers, stoves, or other apparatus (including amplifiers) that produce heat.

Avertissement! N'installez pas l'appareil près d'une source de chaleur telle que des radiateurs, des bouches d'air de chauffage, des fourneaux ou d'autres appareils (amplificateurs compris) qui produisent de la chaleur.

Warnung! Nicht in der Nähe von Wärmequellen wie Heizkörpern, Heizregistern, Öfen oder anderen Wärme erzeugenden Geräten (einschließlich Verstärkern) aufstellen.

¡Advertencia! No instale cerca de fuentes de calor tales como radiadores, registros de calor, estufas u otros aparatos (incluidos amplificadores) que generan calor.

Aviso! Não instale perto de nenhuma fonte de calor tal como radiadores, saídas de calor, fogões ou outros aparelhos (incluindo amplificadores) que produzam calor.

Avviso! Non installare vicino a fonti di calore come termosifoni, diffusori di aria calda, stufe o altri apparecchi (amplificatori compresi) che emettono calore

Warning! Do not defeat the safety purpose of the polarized or grounding-type plug. A polarized plug has two blades with one wider than the other. A grounding type plug has two blades and a third grounding prong. The wide blade or the third prong are provided for your safety. If the provided plug does not fit into your outlet, consult an electrician for replacement of the obsolete outlet.

Avertissement! La sécurité de la prise polarisée ou de la prise de type mise à la terre ne doit en aucun cas être empêchée de fonctionner. Une prise polarisée a deux broches, l'une étant plus large que l'autre. Une prise de type mise à la terre a deux broches et une troisième broche pour la mise à la terre. La broche large ou la troisième broche sont fournies pour votre sécurité. Si la prise fournie ne s'insère pas dans votre prise femelle, consultez un électricien pour le remplacement de la prise femelle obsolète.

Warnung! Der Sicherheitszweck des gepolten bzw. Schukosteckers ist zu berücksichtigen. Ein gepolter Stecker verfügt über zwei Pole, von denen einer breiter als der andere ist. Ein Schukostecker verfügt neben den zwei Polen noch über einen dritten Pol zur Erdung. Der breite Pol bzw. der Erdungspol dienen der Sicherheit. Wenn der zur Verfügung gestellte Stecker nicht in Ihren Anschluss passt, konsultieren Sie einen Elektriker, um den veralteten Anschluss zu ersetzen.

¡Advertencia! No eche por tierra la finalidad del tipo de enchufe polarizado con conexión a tierra. Un enchufe polarizado tiene dos espigas, una más ancha que la otra. Un enchufe con conexión a tierra tiene dos espigas iguales y una tercera espiga que sirve para la conexión a tierra. La expiga ancha, o la tercera espiga, sirven para su seguridad. Si el enchufe suministrado no encaja en el tomacorriente, consulte con un electricista para reemplazar el tomacorriente obsoleto.

Aviso! Não anule a finalidade da segurança da ficha polarizada ou do tipo ligação terra. Uma ficha polarizada tem duas lâminas sendo uma mais larga do que a outra. Uma ficha do tipo de ligação à terra tem duas lâminas e um terceiro terminal de ligação à terra. A lâmina larga ou o terceiro terminal são fornecidos para sua segurança. Se a ficha fornecida não couber na sua tomada, consulte um electricista para a substituição da tomada obsoleta.

Avviso! Non compromettere la sicurezza della spina polarizzata o con messa a terra. Una spina polarizzata ha due spinotti, di cui uno più largo. Una spina con messa a terra ha due spinotti e un terzo polo per la messa a terra. Lo spinotto largo o il terzo polo sono forniti per motivi di sicurezza. Se la spina fornita non si inserisce nella presa di corrente, contattare un elettricista per la sostituzione della presa obsoleta.

Warning! Since the Mains plug is used as the disconnection for the device, it must remain readily accessible and operable.

Avertissement! Puisque la prise principale est utilisée pour débrancher l'appareil, elle doit rester aisément accessible et fonctionnelle.

Warnung! Da der Netzstecker als Trennvorrichtung dient, muss er stets zugänglich und funktionsfähig sein.

¡Advertencia! Puesto que el enchufe de la red eléctrica se utiliza como dispositivo de desconexión, debe seguir siendo fácilmente accesible y operable.

Aviso! Dado que a ficha principal é utilizada como a desconexão para o dispositivo, esta deve manter-se prontamente acessível e funcional.

Avviso! Poiché il cavo di alimentazione viene usato come dispositivo di sconnessione, deve rimane prontamente accessibile e operabile.

Warning! Protect the power cord from being walked on or pinched particularly at plugs, convenience receptacles, and the point where they exit from the device.

Avertissement! Protégez le cordon d'alimentation pour que l'on ne marche pas dessus ou qu'on le pince, en particulier au niveau des prises mâles, des réceptacles de convenance, et à l'endroit où il sort de l'appareil.

Warnung! Vermeiden Sie, dass auf das Netzkabel getreten oder das Kabel geknickt wird, insbesondere an den Steckern, den Steckdosen und am Kabelausgang am Gerät.

¡Advertencia! Proteja el cable de energía para que no se le pise ni apriete, en especial cerca del enchufe, los receptáculos de conveniencia y el punto del que salen del equipo.

Aviso! Proteja o cabo de alimentação de ser pisado ou de ser comprimido particularmente nas fichas, em tomadas de parede de conveniência e no ponto de onde sai do dispositivo.

Avviso! Proteggere il cavo di alimentazione in modo che nessuno ci cammini sopra e che non venga schiacciato soprattutto in corrispondenza delle spine e del punto in cui esce dal dispositivo.

Warning! Unplug this device during lightning storms or when unused for long periods of time.

Avertissement! Débranchez cet appareil pendant les orages avec éclairsou s'il est inutilisé pendant de longues périodes.

Warnung! Das Gerät ist bei Gewitterstürmen oder wenn es über lange Zeiträume ungenutzt bleibt vom Netz zu trennen.

¡Advertencia! Desenchufe este dispositivo durante tormentas eléctricas o cuando no se lo utilice por largos periodos del tiempo.

Aviso! Desconecte este dispositivo da tomada durante trovoadas ou quando não é utilizado durante longos períodos de tempo.

Avviso! Utilizzare soltanto i collegamenti e gli accessori specificati e/o venduti dal produttore, quali il treppiedi e l'esoscheletro.

Warning! Do not open the chassis. There are no user-serviceable parts inside. Opening the chassis will void the warranty unless performed by an AJA service center or licensed facility.

Avertissement! Ne pas ouvrir le châssis. Aucun élément à l'intérieur du châssis ne peut être réparé par l'utilisateur. La garantie sera annulée si le châssis est ouvert par toute autre personne qu'un technicien d'un centre de service ou d'un établissement agréé AJA.

Warnung! Öffnen Sie das Gehäuse nicht. Keine der Geräteteile können vom Benutzer gewartet werden. Durch das Öffnen des Gehäuses wird die Garantie hinfällig, es sei denn, solche Wartungsarbeiten werden in einem AJA-Service-Center oder einem lizenzierten Betrieb vorgenommen.

¡Advertencia! No abra el chasis. El interior no contiene piezas reparables por el usuario. El abrir el chasis anulará la garantía a menos que se lo haga en un centro de servicio AJA o en un local autorizado.

Advertência! Não abra o chassi. Não há internamente nenhuma peça que permita manutenção pelo usuário. Abrir o chassi anula a garantia, a menos que a abertura seja realizada por uma central de serviços da AJA ou por um local autorizado.

Avvertenza! Non aprire lo chassis. All'interno non ci sono parti riparabili dall'utente. L'apertura dello chassis invaliderà la garanzia se non viene effettuata da un centro ufficiale o autorizzato AJA.

Warning! Disconnect the external AC power supply line cord(s) from the mains power before moving the unit.

Avertissement! Retirez le ou les cordons d'alimentation en CA de la source d'alimentation principale lorsque vous déplacez l'appareil.

Warnung! Trennen Sie die Wechselstrom-Versorgungskabel vom Netzstrom, bevor Sie das Gerät verschieben.

¡Advertencia! Cuando mueva la unidad desenchufe de la red eléctrica el/los cable(s) de la fuente de alimentación CA tipo brick.

Advertência! Remova os cabos CA de alimentação brick da rede elétrica ao mover a unidade.

Avvertenza! Scollegare il cavo dell'alimentatore quando si sposta l'unità.

Warning! Refer all servicing to qualified service personnel. Servicing is required when the device has been damaged in any way, such as power-supply cord or plug is damaged, liquid has been spilled or objects have fallen into the device, the device has been exposed to rain or moisture, does not operate normally, or has been dropped.

Avertissement! Référez-vous au personnel de service qualifié pour tout entretien. L'entretien est exigé quand l'appareil a été endommagé de quelque manière que ce soit, par exemple lorsque le cordon d'alimentation ou la prise sont endommagés, que du liquide a été versé ou des objets sont tombés dans l'appareil, que l'appareil a été exposé à la pluie ou à l'humidité, ne fonctionne pas normalement ou est tombé.

Warnung! Das Gerät sollte nur von qualifizierten Fachkräften gewartet werden. Eine Wartung ist fällig, wenn das Gerät in irgendeiner Weise beschädigt wurde, wie bei beschädigtem Netzkabel oder Netzstecker, falls Flüssigkeiten oder Objekte in das Gerät gelangen, das Gerät Regen oder Feuchtigkeit ausgesetzt wurde, nicht ordnungsgemäß funktioniert oder fallen gelassen wurde.

¡Advertencia! Consulte al personal calificado por cuestiones de reparación. El servicio de reparación se requiere cuando el dispositivo ha recibido cualquier tipo de daño, por ejemplo cable o espigas dañadas, se ha derramado líquido o se han caído objetos dentro del dispositivo, el dispositivo ha sido expuesto a la lluvia o humedad, o no funciona de modo normal, o se ha caído.

Aviso! Remeta todos os serviços de manutenção para o pessoal de assistência qualificado. A prestação de serviços de manutenção é exigida quando o dispositivo foi danificado mediante qualquer forma, como um cabo de alimentação ou ficha que se encontra danificado/a, quando foi derramado líquido ou caíram objectos sobre o dispositivo, quando o dispositivo foi exposto à chuva ou à humidade, quando não funciona normalmente ou quando foi deixado cair.

Avviso! Fare riferimento al personale qualificato per tutti gli interventi di assistenza. L'assistenza è necessaria quando il dispositivo è stato danneggiato in qualche modo, ad esempio se il cavo di alimentazione o la spina sono danneggiati, è stato rovesciato del liquido è stato rovesciato o qualche oggetto è caduto nel dispositivo, il dispositivo è stato esposto a pioggia o umidità, non funziona correttamente o è caduto

Warranty Information

Limited Warranty

AJA Video Systems, Inc. (AJA Video) warrants that this product will be free from defects in materials and workmanship for a period of five years from the date of purchase. If a product proves to be defective during this warranty period, AJA Video, at its option, will either repair the defective product without charge for parts and labor, or will provide a replacement in exchange for the defective product.

In order to obtain service under this warranty, you the Customer, must notify AJA Video of the defect before the expiration of the warranty period and make suitable arrangements for the performance of service. The Customer shall be responsible for packaging and shipping the defective product to a designated service center nominated by AJA Video, with shipping charges prepaid. AJA Video shall pay for the return of the product to the Customer if the shipment is to a location within the country in which the AJA Video service center is located. Customer shall be responsible for paying all shipping charges, insurance, duties, taxes, and any other charges for products returned to any other locations.

This warranty shall not apply to any defect, failure or damage caused by improper use or improper or inadequate maintenance and care. AJA Video shall not be obligated to furnish service under this warranty a) to repair damage resulting from attempts by personnel other than AJA Video representatives to install, repair or service the product, b) to repair damage resulting from improper use or connection to incompatible equipment, c) to repair any damage or malfunction caused by the use of non-AJA Video parts or supplies, or d) to service a product that has been modified or integrated with other products when the effect of such a modification or integration increases the time or difficulty of servicing the product.

THIS WARRANTY IS GIVEN BY AJA VIDEO IN LIEU OF ANY OTHER WARRANTIES, EXPRESS OR IMPLIED. AJA VIDEO AND ITS VENDORS DISCLAIM ANY IMPLIED WARRANTIES OF MERCHANTABILITY OR FITNESS FOR A PARTICULAR PURPOSE. AJA VIDEO'S RESPONSIBILITY TO REPAIR OR REPLACE DEFECTIVE PRODUCTS IS THE WHOLE AND EXCLUSIVE REMEDY PROVIDED TO THE CUSTOMER FOR ANY INDIRECT, SPECIAL, INCIDENTAL OR CONSEQUENTIAL DAMAGES IRRESPECTIVE OF WHETHER AJA VIDEO OR THE VENDOR HAS ADVANCE NOTICE OF THE POSSIBILITY OF SUCH DAMAGES.

Index

A
Analog Out Map 36, 37
Apply Button 32
Audio Screen 35
  ROI-DP 36
  ROI-DVI 35
  ROI-HDMI 35

B
Bezel Width 32
Block Diagram 9

C
Camera Video to Switcher 15
Center Button 23, 27
Copyright 2

D
Documentation
  Downloading 17
  Mini-Converter 17
DP Conversion
  ROI-DP 37
DVI-to-HDMI Adapter 10
DVI Video Input 10

E
Edge Filtering Button 27
EDID Flow Through 34
Embed Into DP
  ROI-DP 37
Embed Into SDI
  ROI-DP 36
Exceeds Max Rate 26
  Solution 8, 34

F
Features 7
Flicker Filtering Button 27
Flip
  Illustration 28
  Interaction with Rotation and Frame Delay 28
Frame Delay 28
  Interaction with Rotation and Flip 28
Full Screen Button 23

G
Genlock Control
  ROI-DP 34
  ROI-DVI 32, 33
  ROI-HDMI 32, 33
Genlock Screen 32
  ROI-DP 34
  ROI-DVI 32
  ROI-HDMI 32

H
HDCP Protection 7
H-Delay and V-Delay 33, 35
HDMI Conversion
  ROI-DVI 36
  ROI-HDMI 36
HDMI-to-DVI Adapter 11
HDMI Video Input 9, 11
Horizontal Flip 28

I
Info Screen 39
Input Screen 22
Input Select
  ROI-DVI 35
  ROI-HDMI 35
Installation Overview 16
I/O Connections 9

M
Matte Background 27
Mini-Config
  Installation on Mac 18
  Installation on PC 17
  Operation 20
  Overview 8
  Running Multiple Converters 20
  Screen Description 21
  Startup 19
Mini-Config Screen
  Audio 35
  Genlock 32
  Info 39
  Input 22
  Monitor Matrix 31
  Output 26
  Update 38
Mini-Converter Documentation 17
Monitor Matrix
  Representation 31
  Screen 31

O
Output Screen 26
Overview 6

P
Pixel Clock Rate 8
Processing Limit Exceeded
  Message 29
  Resolving 30

R
Red Matte 8, 26, 34
  Solution 8, 34

Red SDI Output 8, 26
RGB Range Menu 23
ROI Configurations 13
ROI-DP 7, 10
Audio Screen 36
Connectors 10
DP Conversion 37
Embed Into DP 37
Embed Into SDI 36
Genlock Control 34
Genlock Screen 34
ROI-DVI 7, 11
Audio Screen 35
Connectors 11
Genlock Control 32, 33
Genlock Screen 32
HDMI Conversion 36
Input Select 35
ROI Features 7
ROI-HDMI 7, 9
Audio Screen 35
Connectors 9
Genlock Control 32, 33
Genlock Screen 32
HDMI Conversion 36
Input Select 35
ROI Out Scaling
Output Scaling 26
ROI Overview 6
ROI Selection 22
Click and Drag Options 23
Rotation 28
Illustration 28
Interaction with Flip and Frame Delay 28
Rotation with Portrait Monitors 14
Rows 31

S

Screen Picker 10, 11, 13, 15, 22, 24
Arrow Keys 24
Button 23
Cropping Overlay 25
Matching Resolution Requirement 23
Operation 24
SDI Output Format 27
Simplified Block Diagram 9
Software Update Procedure 39
Specifications 41
ROI-DP 42
ROI-DVI 44
ROI-HDMI 41
ROI-SDI 46
Support 2
System Interconnect Diagrams 13

T

Trademarks 2

U

Update Screen 38

V

Vertical Flip 28

X

X, Y, W, H 32