Dear Customer,
Thank you very much for purchasing a Smeg 50's Style toaster.
By choosing Smeg, you have selected an appliance which combines iconic style with innovative technical design and attention to detail.
This appliance co-ordinates perfectly with other Smeg products, or equally a standalone statement piece in your kitchen.
We hope you enjoy using your new appliance!
For any further information please visit www.smeg50style.com or www.smeg.com.

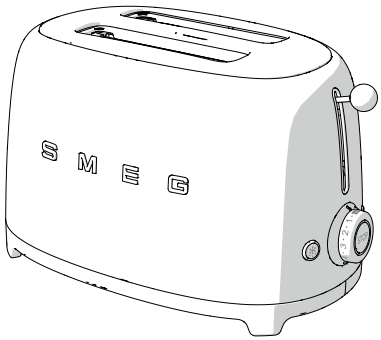

TSF01 Model
2 Slice Toaster

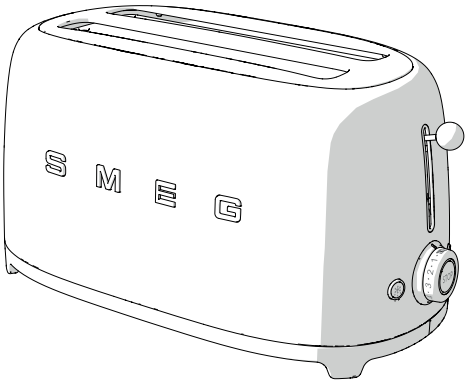

TSF02 Model
4 Slice Toaster

Contents

1	**Instructions**	**18**
1.1	Introduction	18
1.2	This user manual	18
1.3	Intended use	18
1.4	General safety instructions	19
1.5	Manufacturer liability	20
1.6	Identification plate	20
1.7	Disposal	20
2	**Description**	**21**
2.1	Product description	21
2.2	Control panel	22
3	**Use**	**23**
3.1	Before first use	23
3.2	Operation	24
3.3	Special functions	25
3.4	Using optional accessories	26
4	**Cleaning and care**	**28**
4.1	Instructions	28
4.2	Cleaning the surfaces	28
4.3	Ordinary daily cleaning	28
4.4	Food stains or residues	28
4.5	Cleaning the crumb tray	29
4.6	Cleaning the optional sandwich rack and bun warmer	29

EN

We advise you to read this manual carefully, it contains all the instructions for maintaining the appliance's aesthetic and functional qualities.
For further information on the product: www.smeg.com

The manufacturer reserves the right to make any changes deemed useful for improvement of his products without prior notice. The illustrations and descriptions contained in this manual are therefore not binding and are merely indicative.

1 Instructions

1.1 Introduction

Key information for the user:

Instructions

General information on this user manual, on safety and final disposal.

Description

Description of the appliance and its accessories.

Use

Information on the use of the appliance and its accessories, cooking advice.

Cleaning and care

Information for correct cleaning and care of the appliance.

Safety instructions

Information

Advice

1.2 This user manual

This user manual is an integral part of the appliance and must therefore be kept in its entirety and within the user's reach for the whole working life of the appliance.

1.3 Intended use

- Use the appliance only indoors.
- This appliance is intended for household applications such as:
  - staff kitchen areas in shops, offices and other working environments;
  - bed and breakfast facilities / farm accomodation;
  - by guests in hotels, motels and other residential accomodations.
- Ony other use, for example in restaurants, coffee bars ans coffee shops is considered improper.
- It can only be used for toasting bread. Do not use the appliance for anything other than the intended use.
- Carefully follow the notes and suggestions provided in the user manual.
- Only use the appliance for toasting bread.
- The appliance can also be used for preparing toasted sandwiches but only if the specific sandwich racks are used (sold separately).
- If food or other substances were to come in to contact with the heating elements they may cause unpleasant odours, smoke and damage the appliance.
- The appliance is not designed to operate with external timers or with remote-control systems.
- This appliance may be used by children aged at least 8 and by people of reduced physical and mental capacity, or lacking in experience in the use of electrical appliances, as long as they are supervised or instructed by adults who are responsible for their safety.
- Children must never play with the

appliance. Keep the appliance out of children's reach.

1.4 General safety instructions

Follow all safety instructions in order to be able to use the appliance safely.

- Do not immerse the appliance, the power cord or the plug in water or any other liquid.
- Do not use the appliance when the power cord or the plug is damaged or when the appliance has fallen or is damaged in any manner.
- Do not place the appliance on or near a burning gas or an electrical stove or in a heated oven.
- The cord is short to prevent accidents. Do not use an extension cord.
- In case of a fault repairs should only be carried out by a qualified engineer.
- Switch off the appliance immediately after use.
- Never try to put out a fire or flames with water: turn off the appliance, remove the plug from the socket and smother the flames with a fire blanket or any other appropriate cover.
- Read this user manual carefully before using the appliance.
- Do not modify this appliance.
- Do not try to repair the appliance yourself or without the intervention of a qualified engineer.
- If the power supply cable is damaged, contact technical support immediately.

For this appliance

- The toaster can get very hot when it is operating. Do not touch any hot surfaces. Use the control knob and functions, the breadlift and optional accessories.
- Remove the plug from the socket when toaster is not in use, before cleaning and in case of fault. Let it cool down before cleaning.
- Bread may burn. Therefore do not use the appliance near or below combustible materials, such as curtains.
- Make sure the breadlift is elevated before you plug in or remove the plug.
- Make sure that the air around the toaster can circulate freely. Do not place anything on top of the toaster.
- Do not try to remove food from the toaster when it is still operating.
- Never rest metallic objects such as knives, forks, spoons on the appliance during use.
- Never use metallic objects such as knives, forks, spoons to clean the toaster.
- The appliance must never be cleaned by unsupervised children.

1.5 Manufacturer liability

The manufacturer declines all liability for damage to persons or property caused by:

- Use of the appliance other than the one envisaged;
- Not having read the user manual;
- Tampering with any part of the appliance;
- Use of non-original spare parts;
- Not following the safety instructions.

1.6 Identification plate

The identification plate bears the technical data, serial number and brand name of the appliance. Do not remove the identification plate for any reason.

1.7 Disposal

This appliance must be disposed of separately from other waste (Directives 2002/95/EC, 2002/96/EC, 2003/108/EC). The appliance does not contain substances in quantities sufficient to be considered hazardous to health and the environment, in accordance with current European directives.

Power voltage
Danger of electrocution

- Disconnect the main power supply.
- Disconnect the power cable from the electrical system.

- **Old appliances do not belong in household waste!** To comply with current legislation, old appliances, having reached the end of their useful lives, should be taken to a disposal facility where they can be sorted. In this way, any valuable material contained in the old appliances can be recycled and the environment protected. Responsible local authorities or their waste disposal operators can provide further information.

The appliance is packed in non-polluting and recyclable materials.

- Dispose of the packing materials at an appropriate disposal facility.

Plastic packaging
Danger of suffocation

- Do not leave the packaging or any part of it unattended.
- Do not let children play with the plastic bags.

2 Description

2.1 Product description

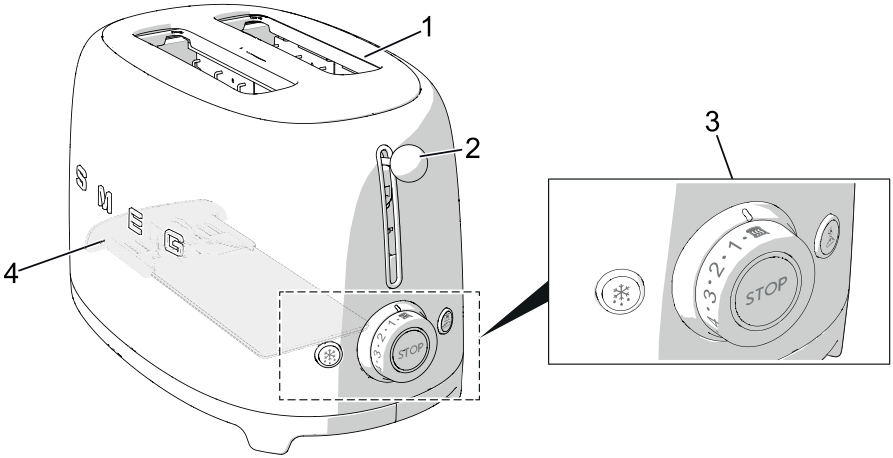

TSF01 Model - 2 Slice Toaster

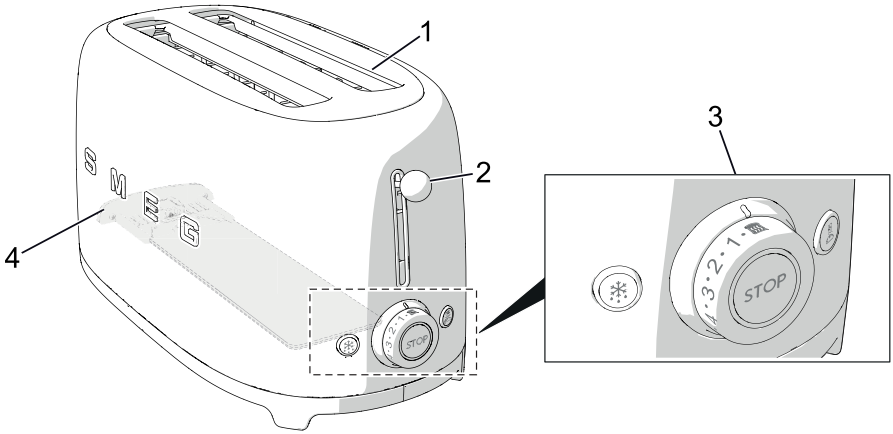

TSF02 Model - 4 Slice Toaster

1 Extra-wide slots with self-centring racks
2 Breadlift
3 Control panel
4 Crumb tray

2.2 Control panel

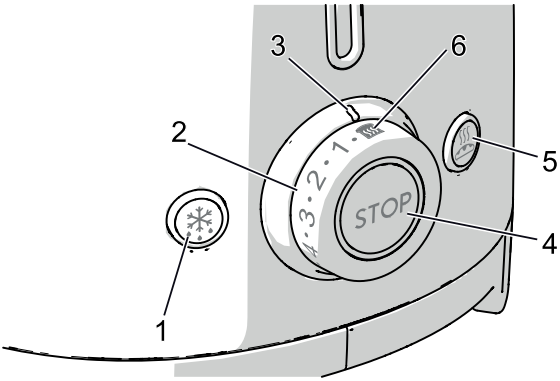

1. Defrost function button

This function is useful when using frozen bread. During toasting the defrost button will light up to indicate that the cycle is activated.

2. Browning control knob

This control is used to select one of the 6 different browning levels or the Reheat function. During toasting the central LED lights up to indicate that the toasting cycle is activated.

3. Browning indicator

It shows the selected browning level or the selected Reheat function.

4. Stop function button

The stop button can be used to cancel or stop the toasting cycle at any time.

5. Bagel function button

This feature will toast one side of the bagel or any other kind of bread, without toasting the other side. During toasting the Bagel button will light up to indicate that the function has been activated.

6. Reheat function

This function is used to reheat cold toasts or to continue a toasting cycle if the result is not satisfactory. During toasting the central LED lights up to indicate that the cycle is activated.

3 Use

Electrical Shock Hazard

- Plug into a grounded 3 prong outlet.
- Do not remove earth prong.
- Do not use an adapter.
- Do not use an extension cord.
- Failure to follow these instructions can result in death, fire, or electrical shock.

The appliance can be used safely at both 50 Hz or 60 Hz without making any setting change.

3.1 Before first use

1. Remove all stickers and labels and clean the outside of the toaster with a damp cloth.
2. Use the toaster for the first time without any bread in it.
3. Turn the browning control to the maximum position and press the breadlift down. In this way you will burn off any dust that has fallen into the toaster during production or transport.

During first use some smoke and smell may develop.

User hints & tips

- The first round of toast you make enables the heating elements to reach the correct toasting temperature. Please note that further rounds of toast could take less time.
- Please consider that the type of bread you use will impact the toasting times. The fresher the bread you use, the longer it will take to toast. Different kinds of bread have different moisture content and will require different browning levels. For example, fruit breads generally toast much quicker, and freshly baked breads will take longer as they have a greater humidity content.

For best results:

- Toast only one type of bread at a time.
- Toast bread slices of the same thickness.
- Use bread slices no thicker than 30mm.
- If you are using handcut bread please try to cut slices as evenly as possible. Uneven slices will toast unevenly.
- Be aware that if you use very thin slices of bread or broken bread they will burn.

3.2 Operation

1. If necessary, shorten the cord by wrapping it under the base.

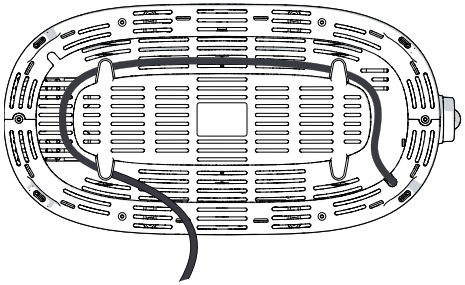

2. Plug in the toaster.
3. Insert the bread in the slot.

Please note that as bread is not normally square you may need to turn the bread on its side to get a better fit and optimize the toasting surface area.

4. Choose the desired browning degree (Browning levels 1 to 6, from light to dark) or the "Reheat function" .

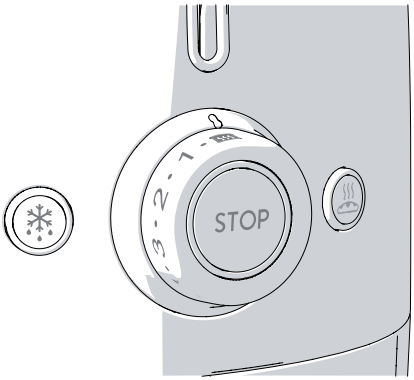

5. Push the lever down until it clicks to activate the toasting cycle.

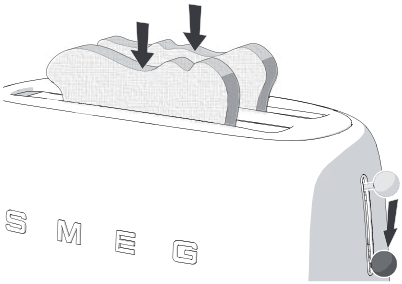

6. If needed, select the additional functions Defrost or Bagel or the two combined.

The heating element is now activated. The bread will be centred in the breadlift automatically for toasting.

7. The toasted bread will pop up automatically when the toast is ready.
8. If the toast is not brown enough and requires just a little extra time, use the reheat button to extend the toasting time.

Warning

- If the appliance is not connected to the mains, the breadlift does not lock.

3.3 Special functions

Cancelling/stopping the toasting cycle

At any time, it is possible to cancel or stop the toasting cycle by pushing the STOP button.

Defrost

This function gently defrosts frozen bread and toasts it at the selected browning level. To activate it, insert the bread into the slot, select the desired browning degree, press the breadlift down until it clicks, then push the defrost button and it will light up. Toasting time will be automatically increased to allow the bread to defrost and brown correctly. When the toast will pop up automatically the light of the defrost button will switch off.

Bagel

This special function is ideal to toast one side only, for bagels, flat bread, muffins, baguettes, etc. To use the function simply insert the bread into the slot with the side that you want toasted facing the outside, select the desired browning degree, press the breadlift down until it clicks, then push the Bagel function button and it will light up. When the bread is toasted, it will pop up automatically and the light of the Bagel function button will switch off.

Reheat

This function allows you to reheat cold toasts or to continue a toasting cycle if the result is not satisfactory. To activate it insert the bread into the slot, select the Reheat function on the browning control knob and press the breadlift down until it clicks. The central light of the browning control knob will light up. When the toast is ready, it will pop up automatically and the light of the control knob will switch off.

> Defrost or Reheat, and the Bagel functions can be selected at the same time.

3.4 Using optional accessories

Accessories may differ according to specification.

Hot appliance

- The bun warmer and sandwich rack will be hot during the toasting cycle. When removed from the toaster, take care not to burn yourself by touching the metal parts.

Sandwich racks

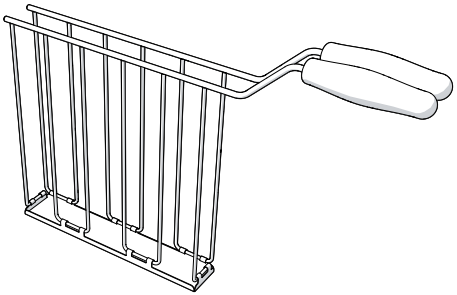

TSSR01 Model suitable for TSF01 Toaster

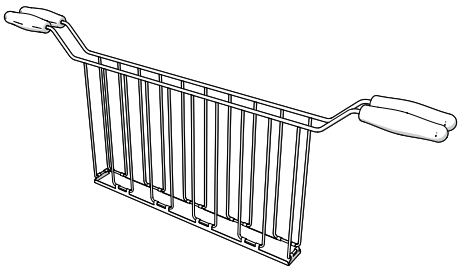

TSSR02 Model suitable for TSF02 Toaster

The sandwich racks are ideal for toasting filled sandwiches, or for easy access of smaller items such as bagels.

User hints & tips

- Lightly butter the outside of the bread, this prevents burning and helps with the warming of the filling. Do not butter the inside of the sandwich.
- For best results use thinly sliced ingredients and finely grated cheese.
- For best results use cold meat (ham, turkey etc.) at room temperature, not straight from the refrigerator.
- Do not overfill the sandwich.
- If using a low browning setting the filling might not heat through correctly. In this case, at the end of the toasting cycle, leave the toast inside the cooking compartment for longer, or extend the time by using the reheat button.

Warning

- If the appliance is not connected to the mains, the breadlift does not lock.

How to use:

1. Open the rack with the handles.
2. Place the sandwich inside the rack.
3. Close the sandwich rack handles together to grip the sandwich in the middle of the racks.

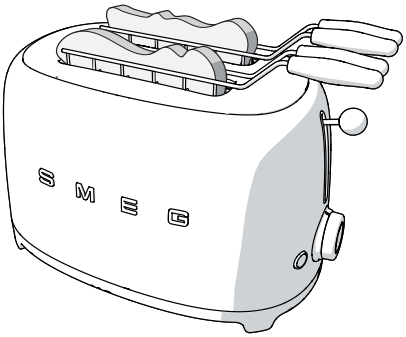

4. Insert the sandwich rack into the slot and select a browning level. If a little more browning is required, you can use the reheat button to extend the toasting time.
5. Push the breadlift down until it clicks to activate the toasting cycle.
6. When the toasting cycle ends remove the sandwich rack from the toaster.

Bun Warmer

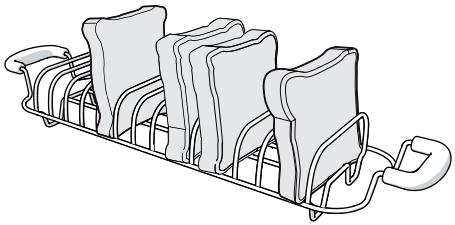

TSBW01 Model suitable for TSF01 Toaster
TSBW02 Model suitable for TSF02 Toaster

The bun warmer is used to warm small bread rolls, flat bread or pastries.

How to use:

1. Place the bun warmer on top of the toaster, making sure the wire feet on the bottom of the warmer fit into the toaster slots.
2. Place small bread rolls, flat bread or pastries on top of the warmer and set the browning level to '1' (no higher).
3. Lower the breadlift until it clicks to activate the toasting cycle.

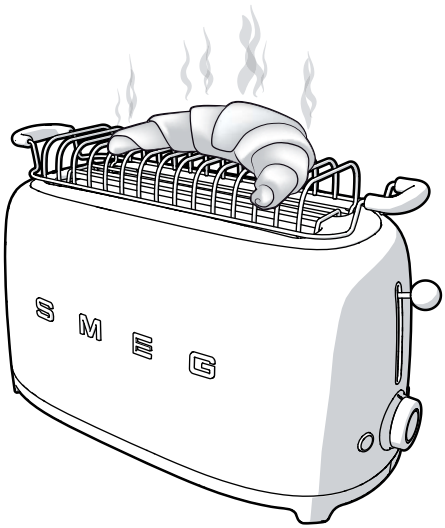

4 Cleaning and care

4.1 Instructions

Improper use
Electrical shock hazard

- Always disconnect the plug from the socket before cleaning the toaster, crumb tray and optional accessories.

Hot appliance
Burns Hazard

- Always leave the appliance and optional accessories to cool down before cleaning.

Improper use
Risk of damage to surfaces

- Do not use steam jets for cleaning the appliance.
- Do not use cleaning products containing chlorine, ammonia or bleach on steel parts or parts with metallic finishes (e.g. anodizing, nickel- or chromium-plating).
- Do not use abrasive or corrosive detergents (e.g. powder products, stain removers and metallic sponges).
- Do not use rough or abrasive materials or sharp metal scrapers.

4.2 Cleaning the surfaces

To keep the surfaces in good condition, they should be cleaned regularly after use. Let them cool first.

4.3 Ordinary daily cleaning

Always use products that do not contain abrasives or chlorine-based acids.

Pour the product onto a damp cloth and wipe the surface, then wipe over thoroughly and dry with a soft cloth or a microfibre cloth.

If grease or oil splatters on the toaster, wipe splatters away immediately using a clean, damp cotton cloth.

4.4 Food stains or residues

Do not use metallic sponges or sharp scrapers as they will damage the surfaces.

Use ordinary non-abrasive products with the aid of wooden or plastic utensils if necessary. Wipe over thoroughly and dry with a soft cloth or a microfibre cloth.

4.5 Cleaning the crumb tray

1. Push the Crumb Tray to unlock it, then pull to slide it out to empty it. The Crumb Tray should be emptied after each use.

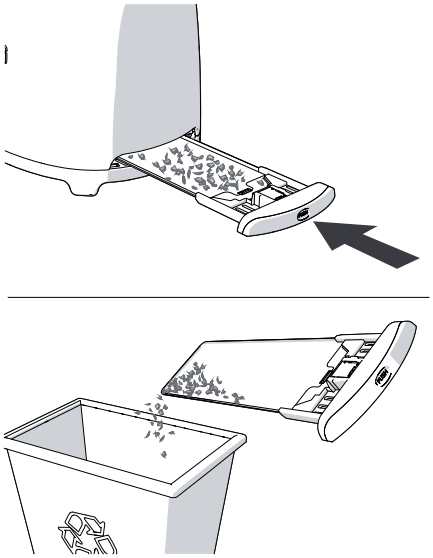

The Crumb Tray is hand-washable. Always dry the tray thoroughly before replacing it into the toaster

2. Return the Crumb Tray to Toaster. Press it in firmly until it clicks into position. Do not use the Toaster without the Crumb Tray in the proper position.

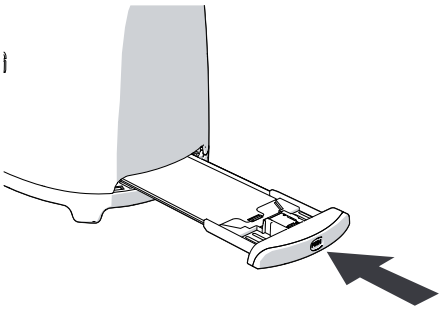

4.6 Cleaning the optional sandwich rack and bun warmer

The sandwich rack and bun warmer can be washed by hand in warm soapy water. After washing, rinse them and dry them thoroughly with a soft cloth.