FPMA-D700D

NEOMOUNTS DESK MONITOR ARM

SPECIFICATIONS

GENERAL

Min. screen size*	19 inch
Max. screen size*	30 inch
Min. weight	0 kg (per screen)
Max. weight	8 kg (per screen)
Screens	2
VESA minimum	75x75 mm
VESA maximum	100x100 mm
Desk mount	Clamp

FUNCTIONALITY

Type	Tilt Rotate Swivel Full motion
Height adjustment	32-42 cm
Width adjustment	52-83 cm
Depth adjustment	15 cm
Tilt (degrees)	180°
Swivel (degrees)	180°
Rotate (degrees)	360°
Adjustment type	Manual

INFORMATION

Color	Black
Main material	Steel
Warranty	5 year
EAN code	8717371442484

*Please note: The inch sizes stated are just an indication, combined with the weight and VESA sizes. The maximum weight and VESA size are absolute restrictions for the products and should not be exceeded.





Neomounts Tilt/Turn/Rotate Dual desk monitor arm (clamp) for two 19-30" Monitor Screens, Height Adjustable - Black

The Neomounts desk mount, model FPMA-D700D is a tilt-, swivel and rotatable desk mount for 2 flat screens up to 30". This mount is a great choice for space saving placement on desks using a desk clamp.

Neomounts versatile tilt (180°), rotate (360°) and swivel (180°) technology allows the mount to change to any viewing angle to fully benefit from the capabilities of the flat screen. The mount is manually height adjustable from 52 to 83 centimetres. Depth 15 centimetres. An innovative cable management conceals and routes cables from mount to flat screen. Hide your cables to keep the workplace nice and tidy.

Neomounts FPMA-D700D has two pivot points and is suitable for screens up to 30" (76 cm). The weight capacity of this product is 8 kg each screen. The desk mount is suitable for screens that meet VESA hole pattern 75x75 or 100x100mm. Different hole patterns can be covered using Neomounts VESA adapter plates.

By using an ergonomic mount neck- and back complaints can be avoided. Ideal for use in offices and on counters or in a reception area.

All installation material is included with the product.

FPMA-D700D NEOMOUNTS DESK MONITOR ARM

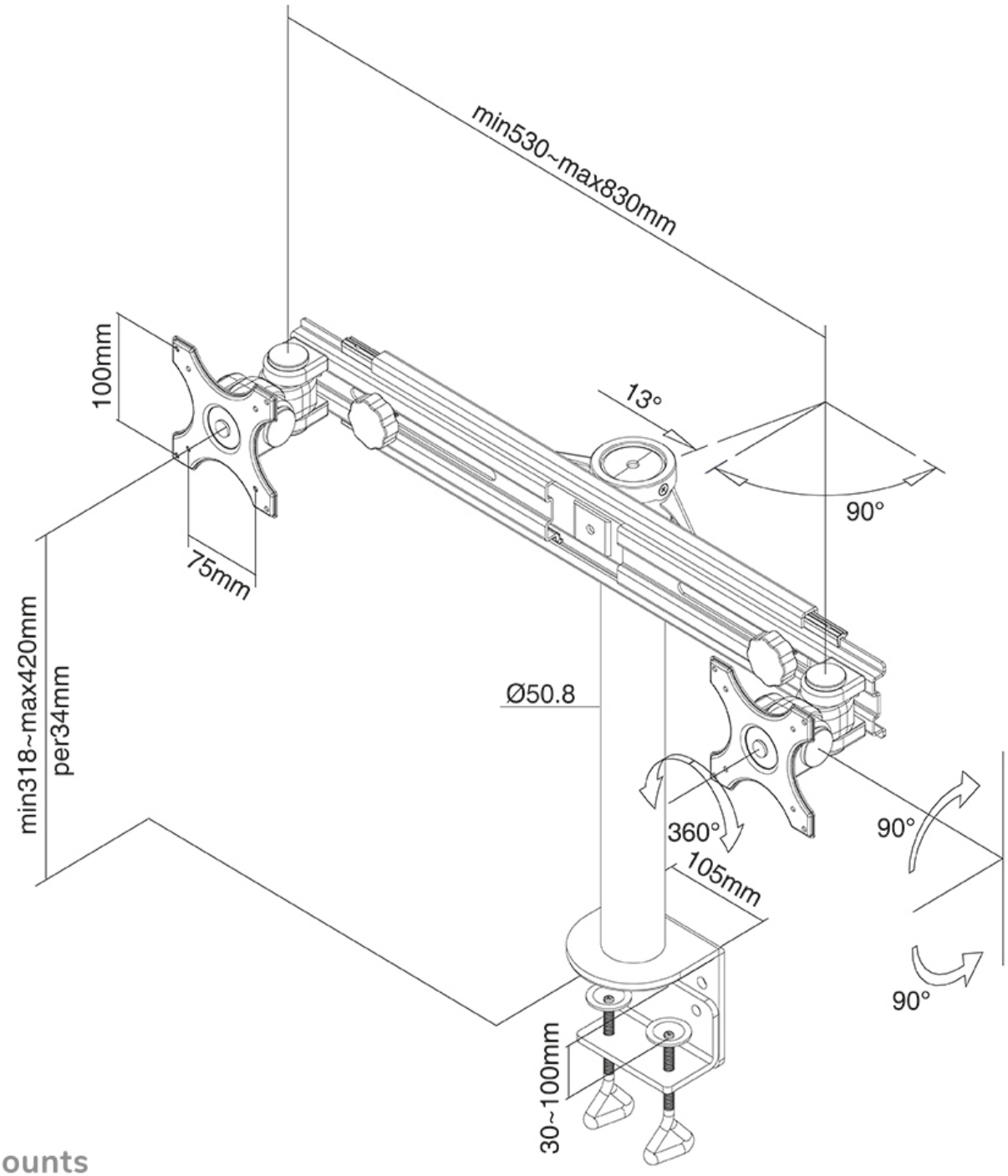

Neomounts