CHIEF
A brand of legrand

FUSION® WALL MOUNT SOLUTIONS

STANDARD FIXED AND TILT MOUNTS

Fusion Standard Fixed and Tilt Mounts are a great option for installs using connector kits for multi-display applications, when micro-height adjustment isn't needed. New and existing accessories are available to customize any configuration.*



1 SUPER STABILITY
Included set screws can be used to keep the mount rigid while attaching the uprights to the wall and while hanging the display. Engaging the set screws also ensures secure, precise positioning throughout the life of the installation.



2 NESTING SPACERS
Exclusive nesting spacers can be stacked to achieve any depth, providing a simple, universal hardware solution for mounting displays.



3 IMPROVED CABLE MANAGEMENT
Redesigned end caps allow cables to be routed behind the poles – no need to remove.



4 FASTER INSTALLATION
Integrated teardrop design speeds up wall plate installation by allowing pre-installation of the bolts to the wall. The mount can then be hung and the bolts tightened down to secure the install.



5 QUICK-STORE CORDS
New, magnetized ClickConnect™ makes it easy to store and access pull cords. Once the display is clicked into place simply snap the magnet anywhere onto the interface to hide the cords from view.

*See our Fusion™ Wall Mounts Brochure for more information on mounts and accessories.

CHIEF
A brand of legrand

FUSION® WALL MOUNT SOLUTIONS

SPECIFICATIONS



MSA1U
Medium Fixed Mount, Landscape



LSA1U
Large Fixed Mount, Landscape



MTA1U
Medium Tilt Mount, Landscape



LTA1U
Large Tilt Mount, Landscape

MODEL	RECOMMENDED SCREEN SIZE	DEPTH FROM WALL	CENTERLESS LATERAL SHIFT	CENTRIS LOW-PROFILE TILT	MAXIMUM MOUNTING PATTERNS (WXH)	WEIGHT CAPACITY (DUAL STUD)
MSA1U*	32 - 65″	2″ (51 mm)	12.9" (327 mm)	–	642 x 400 mm	125 lbs (56.7 kg)
LSA1U	42 - 86″	2″ (51 mm)	17.4" (441 mm)	–	870 x 400 mm	200 lbs (90.7 kg)
MTA1U*	32 - 65″	2″ (51 mm)	12.9" (327 mm)	+2° / -12°	650 x 400 mm	125 lbs (56.7 kg)
LTA1U	42 - 86″	2″ (51 mm)	17.4" (441 mm)	+2° / -12°	870 x 400 mm	200 lbs (90.7 kg)

*Compatible with dual stud mounting only. Order **FCA1S** to accommodate single stud mounting.

CHIEF
A brand of legrand

FUSION® WALL MOUNT SOLUTIONS

LSA1U SPECIFICATIONS

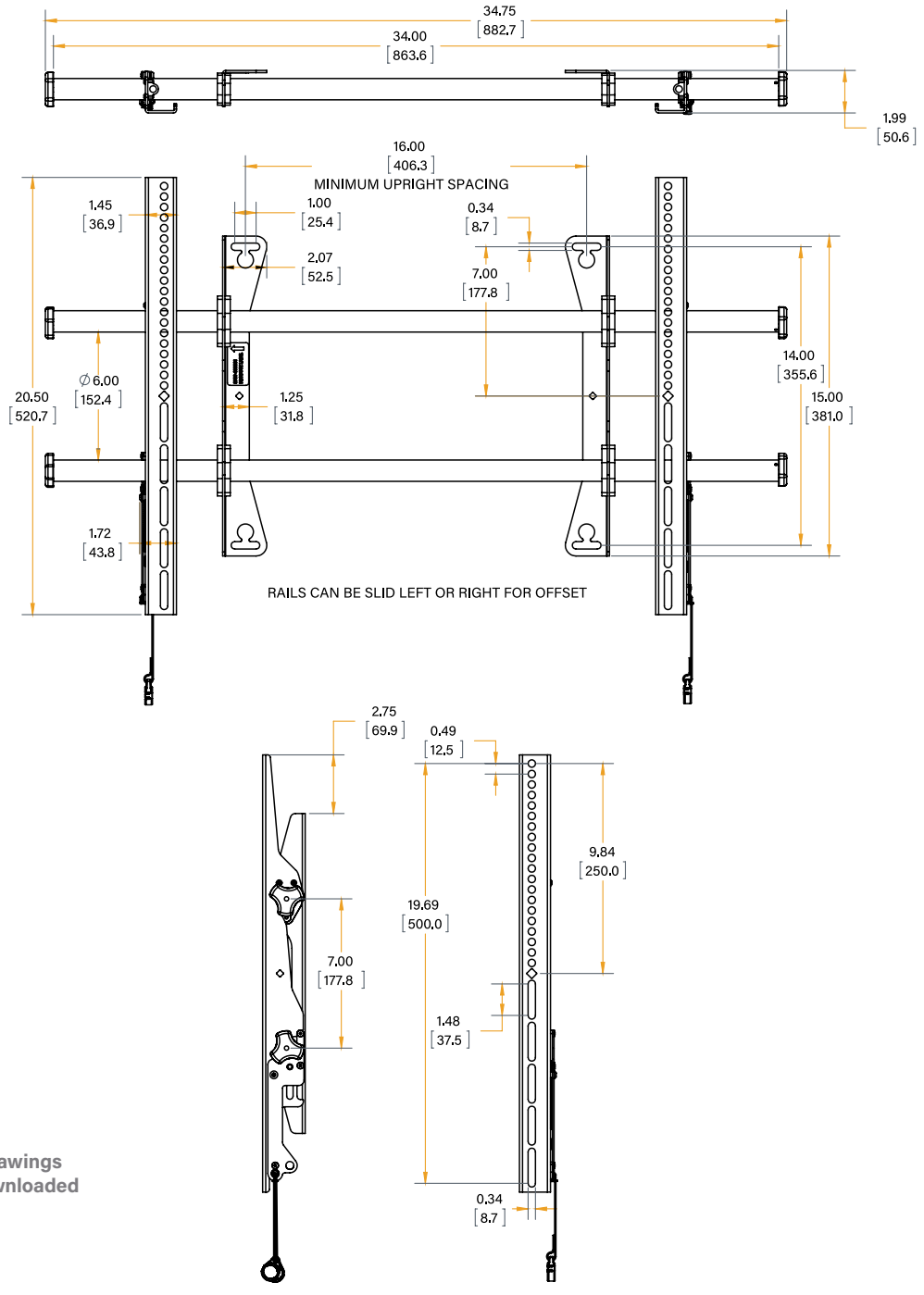

Complete technical drawings and details can be downloaded on legrandav.com.

LEGRAND | AV COMMERCIAL BRANDS

C2G | Chief | Da-Lite | Luxul | Middle Atlantic | Vaddio | Wiremold

CHIEF
A brand of legrand

FUSION® WALL MOUNT SOLUTIONS

LTA1U SPECIFICATIONS

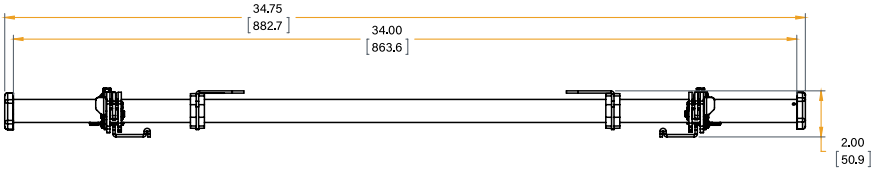

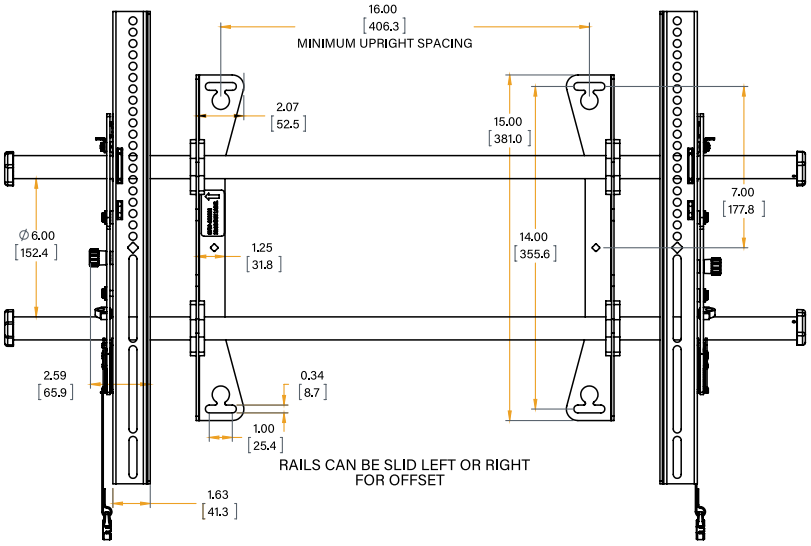

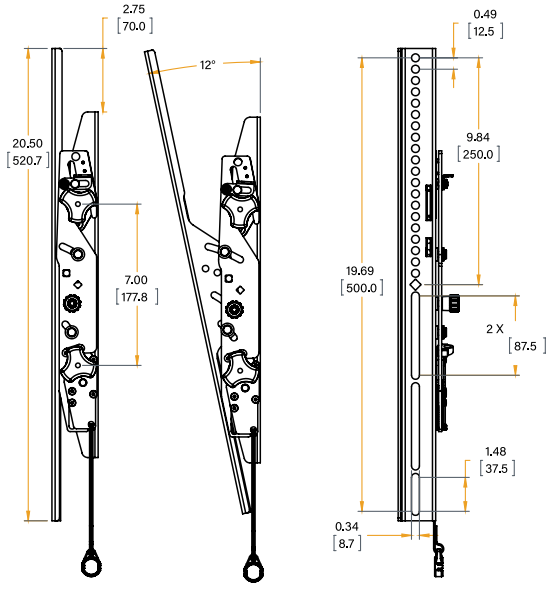

Complete technical drawings and details can be downloaded on legrandav.com.

LEGRAND | AV COMMERCIAL BRANDS

C2G | Chief | Da-Lite | Luxul | Middle Atlantic | Vaddio | Wiremold

FUSION® WALL MOUNT SOLUTIONS

MSA1U SPECIFICATIONS

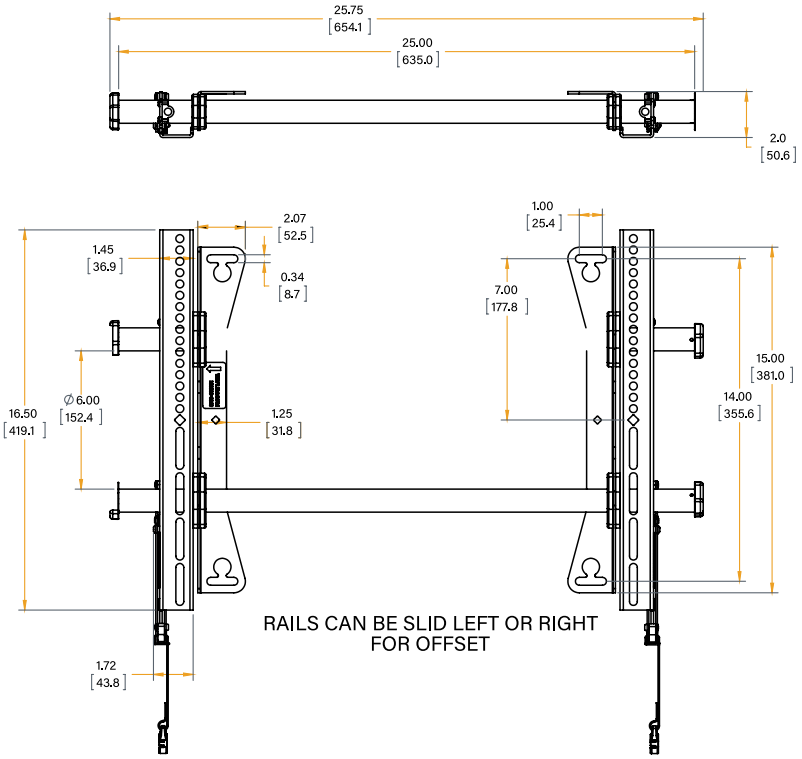

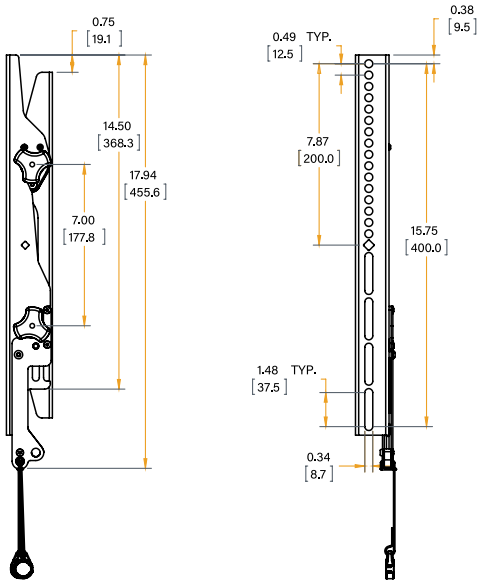

Complete technical drawings and details can be downloaded on legrandav.com.

LEGRAND | AV COMMERCIAL BRANDS

C2G | Chief | Da-Lite | Luxul | Middle Atlantic | Vaddio | Wiremold

FUSION® WALL MOUNT SOLUTIONS

MTA1U SPECIFICATIONS

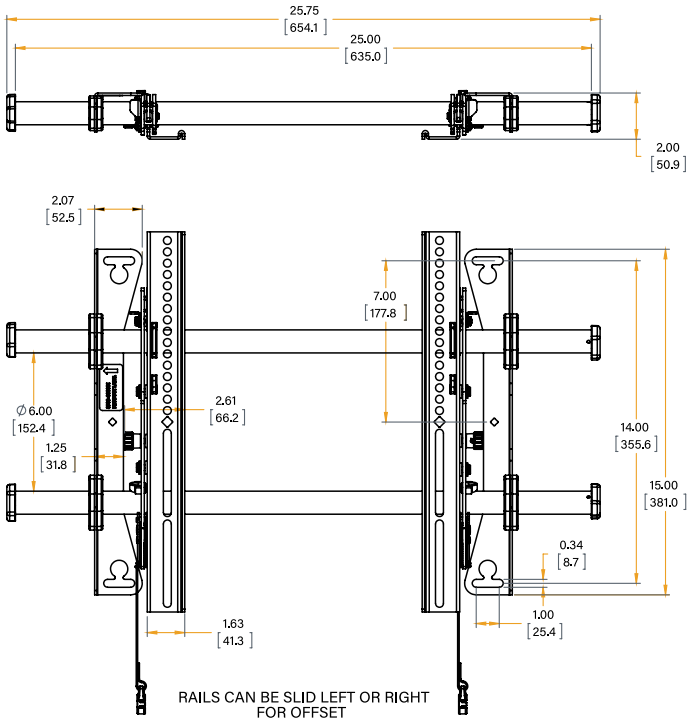

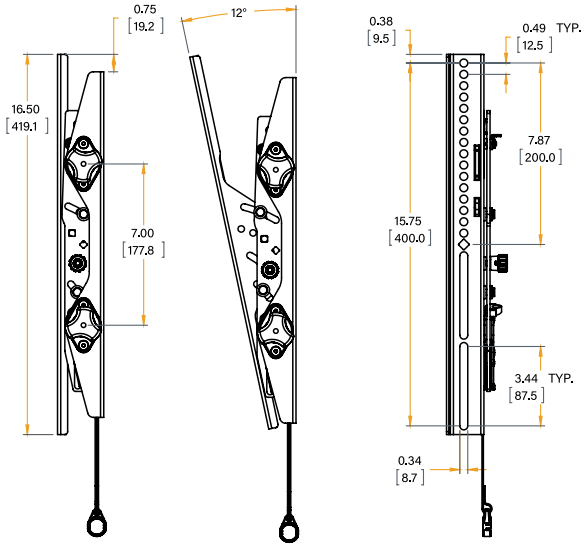

Complete technical drawings and details can be downloaded on legrandav.com.

LEGRAND | AV COMMERCIAL BRANDS

C2G | Chief | Da-Lite | Luxul | Middle Atlantic | Vaddio | Wiremold

INSTALLER INSPIRED | legrandav.com

USA 866.977.3901 av.chief.support@legrand.com CANADA 877.345.4329 av.chief.canada@legrand.com

EMEA +31 495 580 840 av.emea.sales@legrand.com APAC +852 2145 4099 av.asia.sales@legrand.com

©2021 Legrand AV Inc. 210465 Rev A 7/21 Chief is a registered trademark of Legrand AV Inc. All other brand names or marks are used for identification purposes and are trademarks of their respective owners. All patents are protected under existing designations. Other patents pending.