StarTech.com

Hard-to-find made easy®

Quad Monitor Stand - Silver

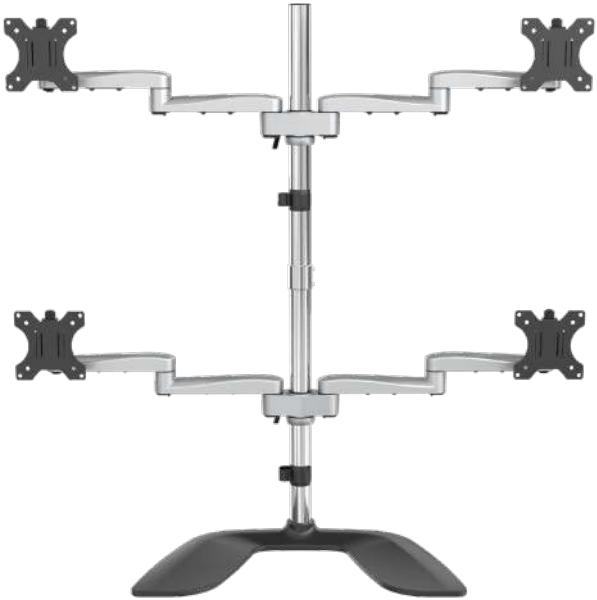

**actual product may vary from photos*

User Manual

SKU#: ARMQUADSS

Manual Revision: 05/31/2019

For the latest information and specifications visit
www.startech.com/ARMQUADSS

Compliance Statements

Use of Trademarks, Registered Trademarks, and other Protected Names and Symbols

This manual may make reference to trademarks, registered trademarks, and other protected names and/or symbols of third-party companies not related in any way to StarTech.com. Where they occur these references are for illustrative purposes only and do not represent an endorsement of a product or service by StarTech.com, or an endorsement of the product(s) to which this manual applies by the third-party company in question. Regardless of any direct acknowledgement elsewhere in the body of this document, StarTech.com hereby acknowledges that all trademarks, registered trademarks, service marks, and other protected names and/or symbols contained in this manual and related documents are the property of their respective holders.

PHILLIPS® is a registered trademark of Phillips Screw Company in the United States or other countries.

Safety Statements

- Product installation and/or mounting should be completed by a certified professional as per the local safety and building code guidelines.
- Cables (including power and charging cables) should be placed and routed to avoid creating electric, tripping or safety hazards.

Mesures de Sécurité

- L'installation et/ou le montage du produit doit être réalisé par un professionnel certifié et dans le respect des normes locales et du code de construction local.
- Les câbles (y compris les câbles d'alimentation et de chargement) doivent être placés et acheminés de façon à éviter tout risque électrique, de chute ou de sécurité

安全対策

- 製品の設置やマウントは、使用地域の安全ガイドラインおよび建築基準に従い、有資格の専門業者が行うようにしてください。
- ケーブル（電源ケーブルと充電ケーブルを含む）は、適切な配置と引き回しを行い、電気障害やつまづきの危険性など、安全上のリスクを回避するようにしてください。

Misure di Sicurezza

- L'installazione e/o il montaggio dei prodotti devono essere eseguiti da un tecnico professionale certificato che conosca le linee guida locali sulle norme edilizie e sulla sicurezza.
- I cavi (inclusi i cavi di alimentazione e di ricarica) devono essere posizionati e stesi in modo da evitare pericoli di inciampo, rischi di scosse elettriche o pericoli per la sicurezza.

Säkerhetsåtgärder

- Installation och/eller montering får endast göras av behöriga yrkespersoner och enligt gällande lokala förordningar för säkerhet och byggnormer.
- Kablar (inklusive elkablar och laddningskablar) ska dras och placeras på så sätt att risk för snubblingsolyckor och andra olyckor kan undvikas.

Warning Statements

- Make sure to assemble this product according to the instructions. Failure to do so might result in personal injury or property damage.
- Make sure that the weight of the monitors doesn't exceed the weight capacity of this product. If you exceed the weight capacity, you might experience personal injury or damage to the equipment. This product can support the following weight: 17.6 lb. (8 kg) per monitor mount.
- Never operate this product if parts are missing or damaged.

Varningsmeddelanden

- Se till att du monterar produkten i enlighet med instruktionerna. Om du inte gör det kan skada på person eller egendom uppstå.
- Se till att skärmens vikt inte överstiger produktens viktkapacitet. Om viktkapaciteten överstigs kan skada på person eller utrustning uppstå. Denna produkt har stöd för följande vikter: 8 kg per skårm.
- Använd aldrig produkten om delar saknas eller är skadade.

Avertissements

- Assemblez ce produit conformément aux instructions. Si vous ne respectez pas ces instructions, vous risquez de vous blesser ou d'endommager l'équipement.
- Vérifiez que le poids du moniteur ne dépasse pas la capacité pondérale du produit. Si vous dépassez la capacité pondérale, vous risquez des blessures corporelles ou des dommages matériels. Ce produit peut supporter 8 kg par 'ecran.
- N'utilisez pas ce produit si des pièces sont endommagées ou manquantes.

Warnhinweise

- Montieren Sie dieses Produkt gemäß den Anweisungen. Anderenfalls kann dies zu Verletzungen von Personen oder Schäden an Eigentum führen.
- Das Gewicht des Monitors darf die zulässige Traglast des Produkts nicht übersteigen. Wenn die Traglast überschritten wird, kann dies zu Verletzungen von Personen oder Schäden an Geräten führen. Dieses Produkt ist für folgendes Gewicht geeignet: 8 kg per monitor.
- Das Produkt darf nicht bedient werden, wenn Teile fehlen oder beschädigt sind.

Dichiarazioni di Avvertenza

- Assemblare il prodotto rispettando le istruzioni. Il mancato rispetto delle istruzioni potrebbe causare danni a persone o proprietà.
- Verificare che il peso del monitor non superi la capacità di supporto del prodotto. In caso di superamento della capacità di supporto potrebbero verificarsi danni a persone o apparecchiature. Il prodotto è in grado di supportare i seguenti pesi: 8 kg per monitor.
- Non utilizzare il prodotto in presenza di parti mancanti o danneggiate.

Mensagens de Aviso

- Certifique-se de que monta este produto de acordo com as instruções. O incumprimento pode resultar em ferimentos pessoais ou danos de propriedade.
- Certifique-se de que o peso do monitor não excede a capacidade de peso deste produto. Se exceder a capacidade de peso, pode sofrer ferimentos pessoais ou danos no equipamento. Este produto pode suportar o seguinte peso: 8 kg por monitor.
- Nunca opere este produto se faltarem peças ou estas estiverem danificadas.

Advertencias de Uso

- Asegúrese de ensamblar este producto según las instrucciones. De lo contrario, pueden producirse lesiones personales o daños de propiedad.
- Asegúrese de que el peso del monitor no exceda la capacidad de carga de este producto. Si se excede dicha capacidad se podrían producirse lesiones personales o daños al equipo. Este producto tiene capicidad para el siguiente peso: 8 kg por monitor.
- Nunca opere o ponga en funcionamiento este producto si faltan piezas o hay daños en las mismas.

Waarschuwingen

- Zorg dat dit product volgens de instructies in elkaar wordt gezet. Indien dit niet goed gebeurt kan lichamelijk letsel of materiële schade ontstaan.
- Zorg dat het gewicht van het scherm de maximale capaciteit van dit product niet overschrijdt. Als u de gewichtscapaciteit overschrijdt, kan persoonlijk letsel of schade aan de apparatuur ontstaan. Dit product ondersteunt het volgende gewicht: 8 kg per monitor.
- Gebruik dit product nooit als er onderdelen ontbreken of beschadigd zijn.

注意

- 必ず取扱説明書に従って本製品の組み立てを行って下さい。取り扱いを誤った場合に、傷害を負う恐れや物的損害が発生する恐れがあります。
- 取り付けるモニターの重量が、本製品で定められた最大積載重量を超えないようにして下さい。最大積載重量をオーバーした場合、傷害を負う恐れやモニターや本製品に損害が発生する恐れがあります。本製品は、モニター1台あたり8 kgまで支持できます。
- 本製品で使用している部品の一部が紛失していたり損傷している状態で使用するのは絶対に止めて下さい。

Table of Contents

Compliance Statements i

Safety Statements ii

Warning Statements iii

Product Information 1

- Package Contents 1

Product Diagram 3

- Dimensions 3
- Front View 4
- Rear View 5
- Side View 6

Technical Specifications 7

Requirements 8

Assembly 9

- Assemble the Base 9
- Adjust the Collar on the Lower Pole 10
- Attach the Shoulder to the Lower Pole 11
- Attach the Swivel Arms to the Lower Pole 12
- Attach the Upper Pole 14
- Adjust the Collar on the Upper Pole 15
- Attach the Shoulder to the Upper Pole 16
- Attach the Swivel Arms to the Upper Pole 17
- Attach the VESA Mounts to the Monitors 18
- Attach the VESA Mounts to the Swivel Arms 20

Adjusting the Monitors 22
Tilt Adjustment 22
Swivel Adjustment 23
Rotation Adjustment 23
Micro Height Adjustment 24
Cable Management 25

Product Information

Package Contents

Swivel Arms

Qty: 4

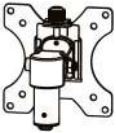

VESA Mounts

Qty: 4

Shoulders

Qty: 2

Upper Pole

Qty: 1

Lower Pole

Qty: 1

Pole Connector

Qty: 1

Base

Qty: 1

Cable-Management Clips

Qty: 2

Screws:

M4x12 mm

M4x16 mm

M4x20 mm

Qty: 16 (of each)

Screws:

M5x12 mm

M5x16 mm

M5x20 mm

Qty: 16 (of each)

Spacers

Qty: 32

Washers

Qty: 16

3 mm Hex Key with Screwdriver Tip

Qty: 1

6 mm Hex Key

Qty: 1

User Manual

Qty: 1

Product Diagram

Dimensions

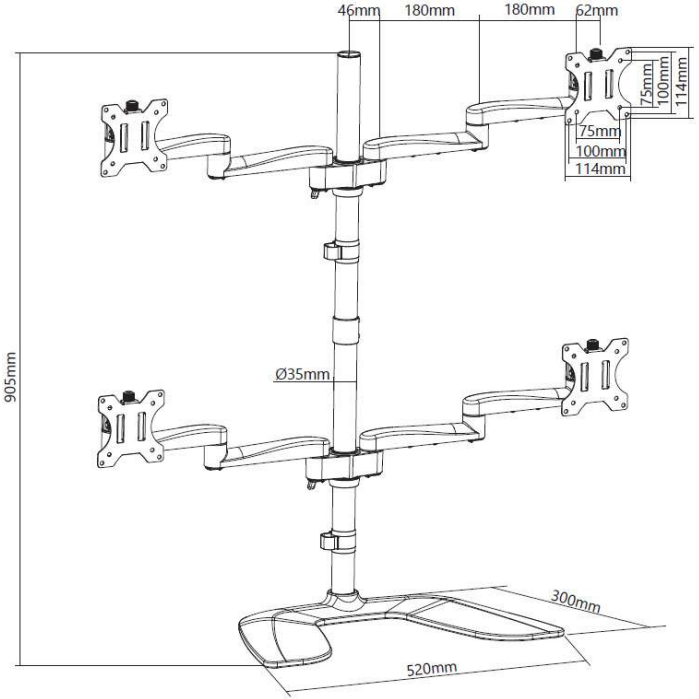

Front View

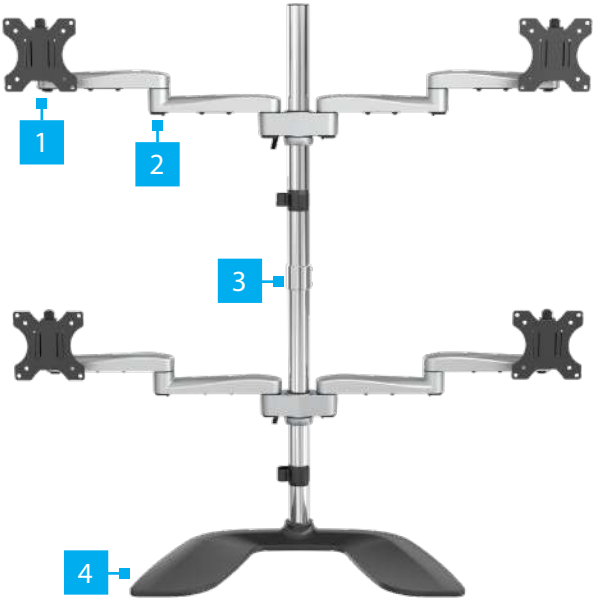

1	VESA Mounts
2	Swivel Arms
3	Pole Connector
4	Base

Rear View

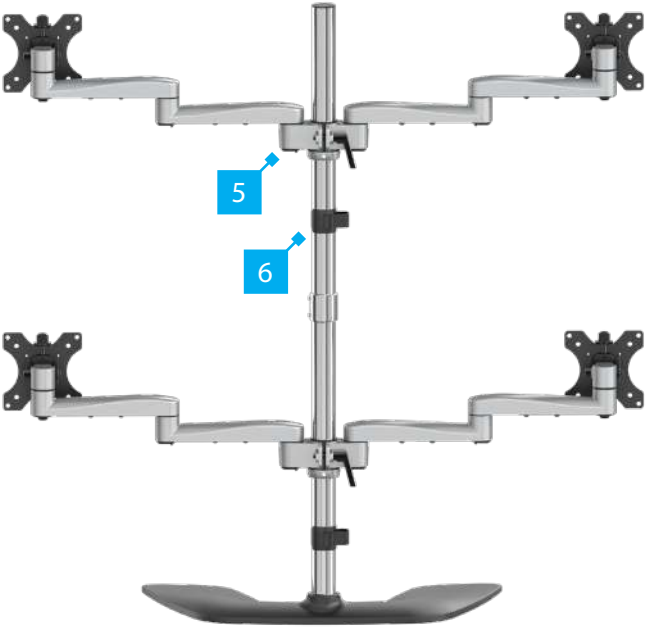

5	Shoulder
6	Cable-Management Clip

Side View

7	Upper Pole
8	Lower Pole

Technical Specifications

Type of Measurement	Measurement
VESA Mounting Hole Pattern	75x75 100x100
Weight Capacity	Up to 17.6 lb. (8 kg) Per Monitor
Tilt	+90º to -40º
Maximum Screen Size 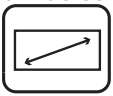	32” (813 mm)
Rotate 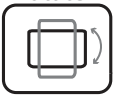	360º
Swivel	360º

Requirements

For the latest requirements, please visit www.startech.com/ARMQUADSS.

- Four Monitors

  Note: *All four* ***Monitors*** *must conform to the size, weight, and VESA pattern requirements (see Technical Specifications).*

- Phillips Head Screwdriver
- Two People for Installation
- (Optional) Two People for Adjustments

Assembly

Warning! *Make sure that all of the hardware is assembled properly and checked for stability before you load the* ***Monitors****.*

Warning! *Make sure that the weight of the* ***Monitors*** *does not exceed the weight capacity of this product. If you exceed the weight capacity, you might experience personal injury or damage to the product.*

Assemble the Base

1. Loosen the **Hex Screws** that are located on the **Base** using the **3 mm Hex Key with Screwdriver Tip**.
2. Slide the **Cable-Management Clip** onto the **Lower Pole**.
3. Screw the **Lower Pole** into the **Base**.
4. Tighten the **Hex Screws** that are located on the **Base** using the **3 mm Hex Key with Screwdriver Tip**. *(Figure 1)*

Figure 1

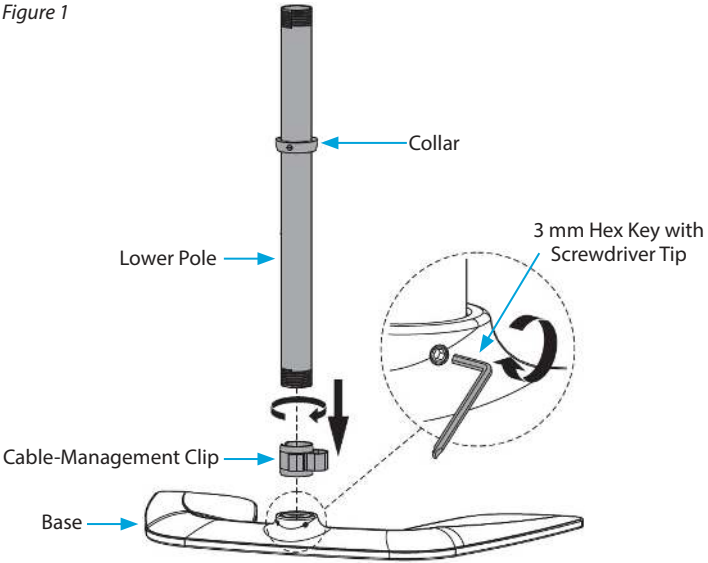

Adjust the Collar on the Lower Pole

1. Loosen the **Flat-Head Screws** on the **Collar**, using the **3 mm Hex Key with Screwdriver Tip**.
2. Slide the **Collar** up or down the **Lower Pole** so that it sits at the desired height for your **Monitors**.
3. Tighten the two **Flat-Head Screws** that are located on the **Collar**, using the **3 mm Hex Key with Screwdriver Tip**. *(Figure 2)*

Figure 2

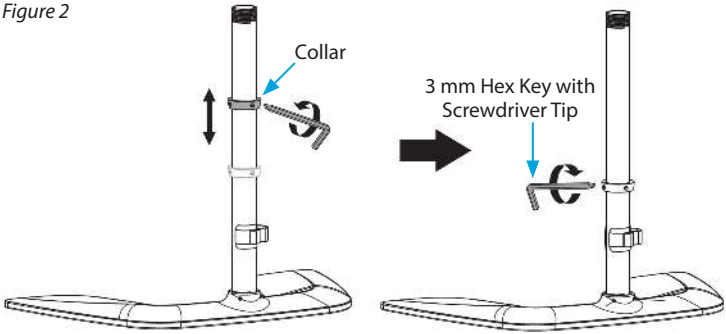

Attach the Shoulder to the Lower Pole

1. Rotate the **Lever** on the **Shoulder** down/counterclockwise to loosen the **Shoulder**. Freely rotate the **Lever** by pulling it away from the **Shoulder** and rotating it to the top position, then rotate the **Lever** down/counterclockwise to loosen the **Shoulder**.

   Note: *The* ***Lever*** *has a ratchet feature. Freely rotate the* ***Lever****,* without engaging the tightening mechanism, *by pulling it away from the* ***Shoulder*** *and rotating it to the desired position. Release the* ***Lever*** *and rotate it to engage the tightening mechanism.*

2. Slide the **Shoulder** over and down the **Pole**, until it makes contact with the **Collar**.

3. Freely rotate the **Lever** to the bottom position and rotate the **Lever** up/clockwise to tighten the **Shoulder**.
   (Figure 3)

Figure 3

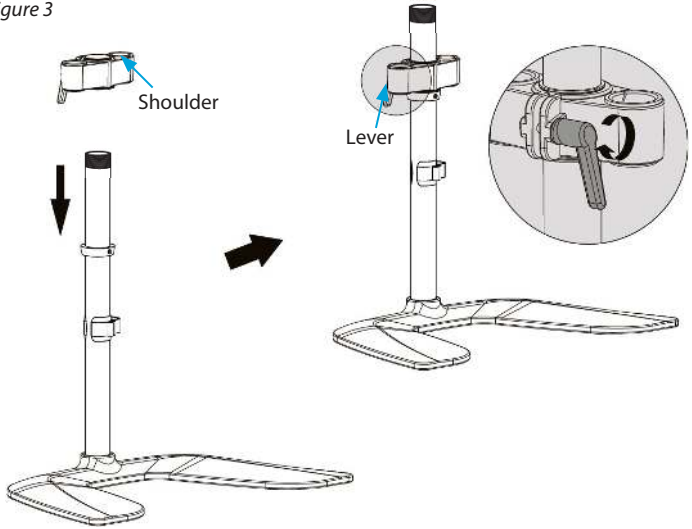

Attach the Swivel Arms to the Lower Pole

1. Insert the **Swivel Arms** into the **Sockets** of the **Shoulder** until each **Swivel Arm** clicks into place. *(Figure 4)*

   To remove the Swivel Arms: *Locate the* ***Clip*** *on the bottom of the* ***Swivel Arms****. Toggle this* ***Clip*** *sideways and pull upwards.*

Figure 4

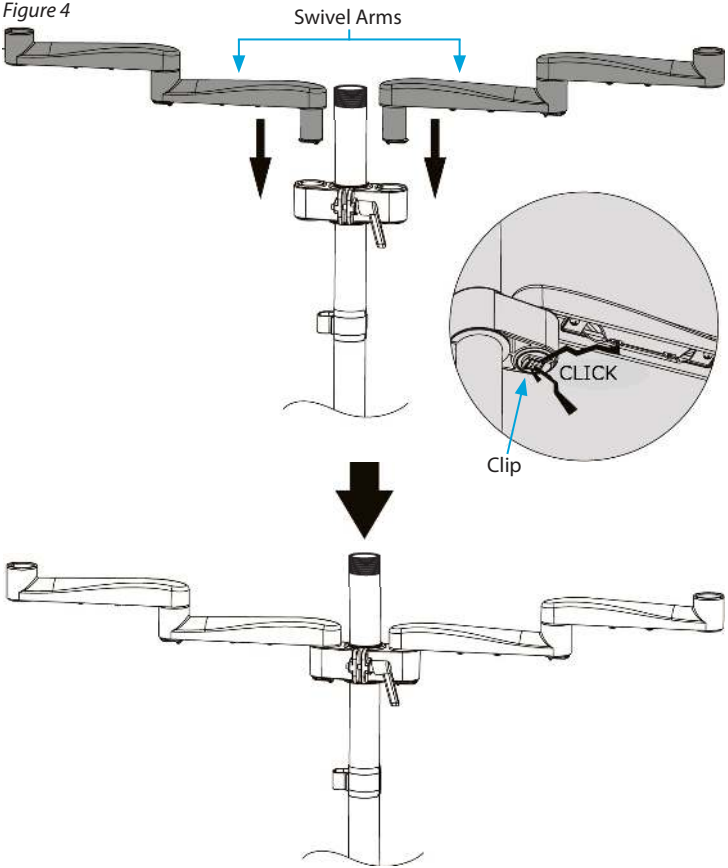

Attach the Upper Pole

1. Loosen the **Hex Screws** that are located on the **Pole Connector** using the **3 mm Hex Key with Screwdriver Tip**.
2. Screw the **Pole Connector** onto the **Lower Pole**.
3. Slide the **Cable-Management Clip** onto the **Upper Pole**.
4. Screw the **Upper Pole** into the **Pole Connector.**
5. Tighten the **Hex Screws** that are located on the **Pole Connector** using the **3 mm Hex Key with Screwdriver Tip**. *(Figure 5)*

Figure 5

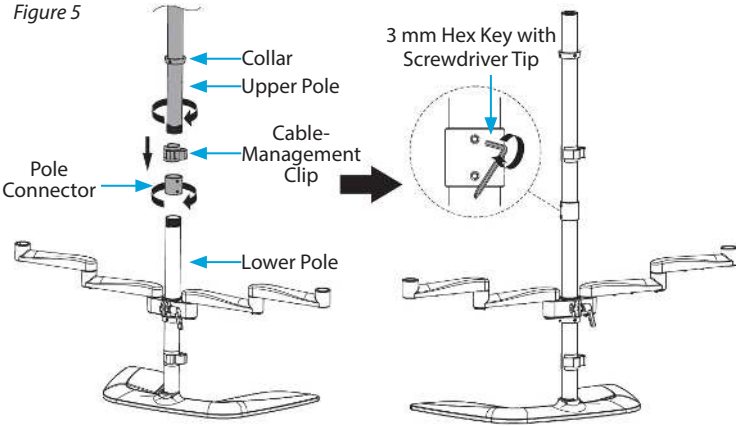

Adjust the Collar on the Upper Pole

1. Loosen the **Flat-Head Screws** on the **Collar** located on the **Upper Pole**, using the **3 mm Hex Key with Screwdriver Tip**.
2. Slide the **Collar** up or down the **Upper Pole** so that it sits at the desired height for the two upper **Monitors**.
3. Tighten the two **Flat-Head Screws** that are located on the **Collar**, using the **3 mm Hex Key with Screwdriver Tip**. *(Figure 6)*

Figure 6

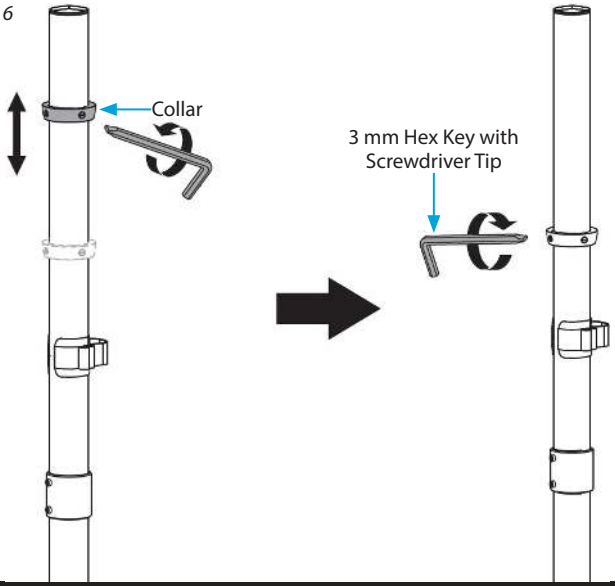

Attach the Shoulder to the Upper Pole

1. Rotate the **Lever** on the **Shoulder** down/counterclockwise to loosen the **Shoulder**. Freely rotate the **Lever** by pulling it away from the **Shoulder** and rotating it to the top position, then rotate the **Lever** down/counterclockwise to loosen the **Shoulder**.

   Note: *The* ***Lever*** *has a ratchet feature. Freely rotate the* ***Lever****,* without engaging the tightening mechanism, *by pulling it away from the* ***Shoulder*** *and rotating it to the desired position. Release the* ***Lever*** *and rotate it to engage the tightening mechanism.*

2. Slide the **Shoulder** over and down the **Pole**, until it makes contact with the **Collar**.

3. Freely rotate the **Lever** to the bottom position and rotate the **Lever** up/clockwise to tighten the **Shoulder**. *(Figure 7)*

Figure 7

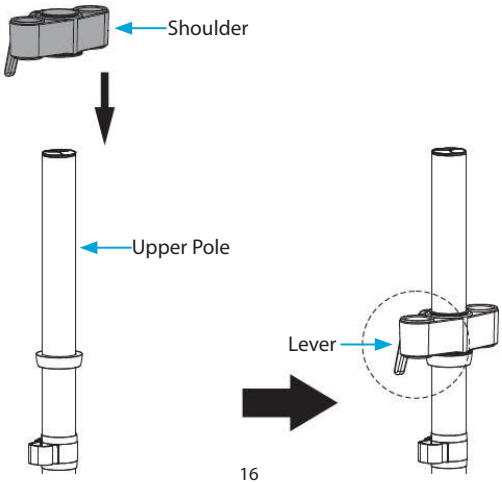

Attach the Swivel Arms to the Upper Pole

1. Insert the **Swivel Arms** into the **Sockets** of the **Shoulder,** located on the **Upper Pole,** until each **Swivel Arm** clicks into place. *(Figure 8)*

   To remove the Swivel Arms: *Release the* ***Clip*** *that is located on the bottom of the* ***Swivel Arms****, where the* ***Swivel Arms*** *connect to the* ***Shoulder****, and pull upwards.*

Figure 8

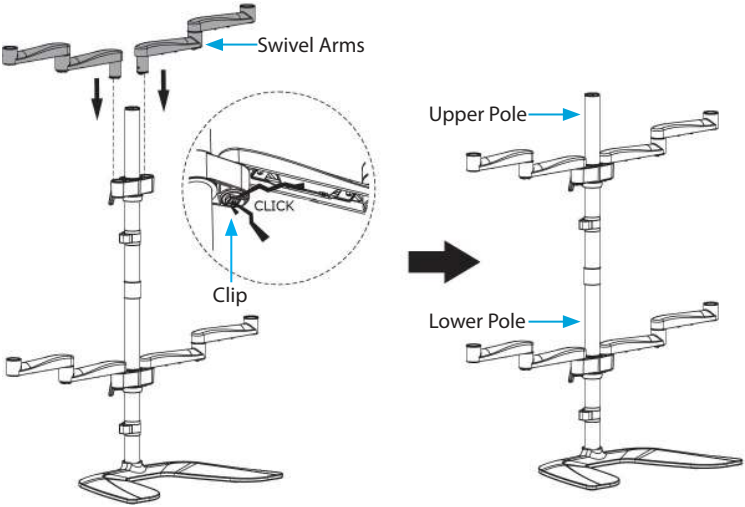

Attach the VESA Mounts to the Monitors

ARMQUADSS is designed to be used with **Monitors** that are the same size and weight. If you attach **Monitors** that are different sizes and weights to **ARMQUADSS**, you do so at your own risk.

To accommodate different **Monitor** designs, **ARMQUADSS** comes with six sets of **Screws** that are different lengths and diameters.

To select the appropriate **Screws** for the type of **Monitors** that you are using, complete the following:

- Determine whether the **Monitor's VESA Mounting Hole Patterns** are flush or inset. Inset mounts may require the use of the **Spacers**.
- Determine the depth of the **Mounting Holes** on the **Monitors**.
- Determine the diameter of the **Mounting Holes** on the **Monitors**.

1. Position one of the **VESA Mounts** over the **Mounting Holes** on the back of one of the **Monitors**.

   Note: *Make sure that you position the* ***VESA Adapter*** *so that the* ***Height-Adjustment Lever*** *on the* ***VESA Mount*** *is facing towards the top of the* ***Monitor****.*

2. Position four of the **Washers** over the holes on the **VESA Mount**.

3. Insert four of the appropriately sized **Screws** through the **Washers**, the **VESA Mount**, and into the **Monitor**. *(Figure 9)*

4. (Optional) Place one or more **Spacers** between the **Holes** in the **Monitor** and the **VESA Mount,** to ensure it sits flat against the **Monitor**. *(Figure 10)*

Figure 9

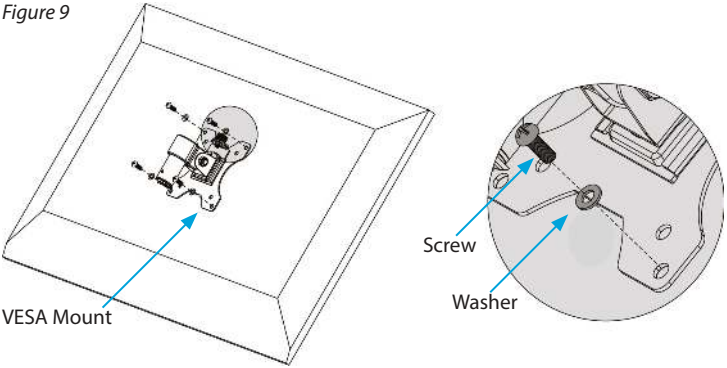

5. Use a **Phillips Head Screwdriver** to tighten the **Screws**.

   Warning! *Do not over-tighten the* ***Screws****. If you encounter resistance while you're tightening the* ***Screws****, stop tightening. Failure to do so could result in damage to the* ***Monitor****.*

Figure 10

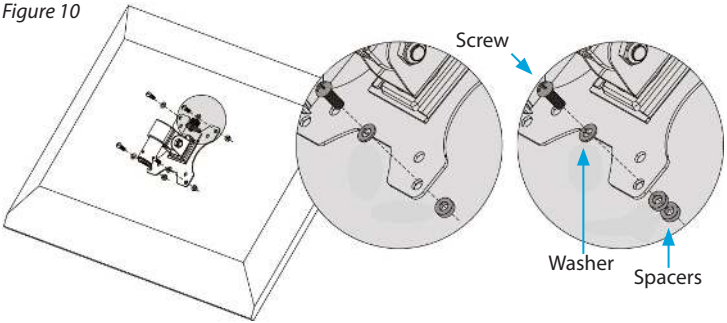

6. Complete steps 1 to 4 to add a **VESA Mount** to the three remaining **Monitors**.

Attach the VESA Mounts to the Swivel Arms

Warning! *Attaching the* ***Monitors*** *is a two-person job. Do not attempt to complete this task by yourself.*

Tipping hazard! *ARMQUADSS is free-standing and when you attach* ***Monitors*** *to it, you increase the tipping hazard. A second person is required to keep ARMQUADSS upright as you attach the* ***Monitors****.*

1. Lift the **Monitor** that will be positioned on the lower left-hand side and position it over the **Swivel Arm Receptacle**.
2. Insert the cylindrical portion of the **VESA Mount** into the **Swivel Arm Receptacle** on the lower left-hand side until you hear the **VESA Mount** click into place.

   To remove the VESA Mounts: *Locate the* ***Clip*** *on the bottom of the* ***VESA Mounts****. Toggle this* ***Clip*** *sideways and pull upwards.*

3. Repeat steps 1-2 for the **Monitor** on the lower right-hand side.
4. Lift the **Monitor** that will be positioned on the upper left-hand side and position it over the **Swivel Arm Receptacle**.
5. Insert the cylindrical portion of the **VESA Mount** into the **Swivel Arm Receptacle** on the upper left-hand side until you hear the **VESA Mount** click into place. *(Figure 11)*
6. Repeat steps 1-2 for the **Monitor** on the upper right-hand side.

Figure 11

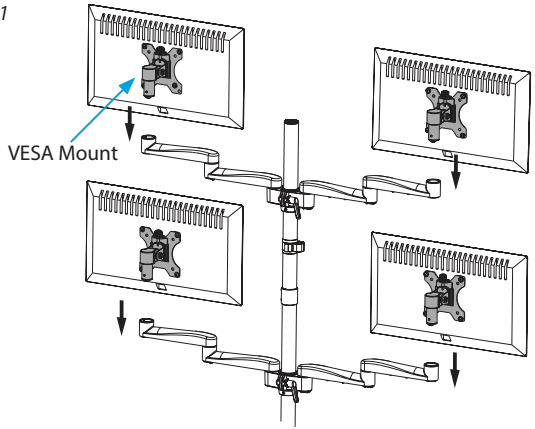

Adjusting the Monitors

Warning! *The most stable configuration of ARMQUADSS is the "flat" position, with all four of the* ***Swivel Arms*** *positioned in a straight line. ARMQUADSS can become unstable depending on how you position the* ***Monitors****. If you adjust the position of the* ***Monitors****, you should exercise caution and test the stability of ARMQUADSS before you use it in the adjusted configuration.*

Tilt Adjustment

Each **Monitor** can be tilted to accommodate different viewing angles (40 degrees downward or 90 degrees upward).

1. Loosen the **Hex Screw** on the side of the **VESA Mount** by inserting the **6 mm Hex Key** and turning it counterclockwise until the **Monitor** can easily be reoriented.

   Note: *It is not necessary to fully loosen the* ***Hex Screws*** *to adjust the tilt of the* ***Monitors****.*

2. Place one hand on the top edge of the **Monitor** and the other hand on the bottom edge of the **Monitor**. Apply light pressure to tilt the **Monitors** either upwards or downwards.

3. When the **Monitor** is in the desired position, tighten the **Hex Screw** on each **VESA Mount** by inserting the **6 mm Hex Key** and turning it clockwise until the **Hex Screw** is hand tight. *(Figure 12)*

   Note: *A second person may be required to hold the* ***Monitors*** *as you tighten the* ***Hex Screws****.*

Figure 12

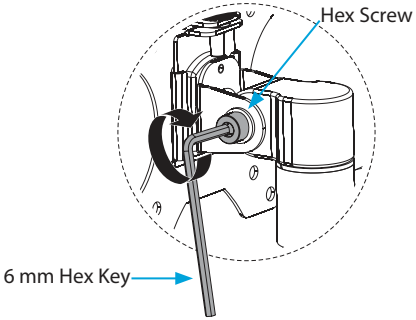

Swivel Adjustment

The **Monitors** can be adjusted on a 360-degree swivel.

- Place one hand on the left side of the **Monitor** and the other hand on the right side of the **Monitor**. Apply light pressure to swivel the **Monitors** either left or right.

Rotation Adjustment

The **Monitors** can be adjusted to be configured in a portrait or landscape view.

> ***Note:*** *Ensure that there is ample clearance to fit all four* ***Monitors****. Some adjustments to the height of the* ***Shoulders*** *will be necessary in order to rotate your* ***Monitors****.*

- Place one hand on the left side of the **Monitor** and the other hand on the right side of the **Monitor**. Apply light pressure to rotate the **Monitors** into a portrait or landscape view.

Micro Height Adjustment

1. Insert the **6 mm Hex Key** into the **Height-Adjustment Knob** that is located on the top of the **VESA Mounts**.
2. Turn the **6 mm Hex Key**, or the **Height-Adjustment Knob**, clockwise to lower the **Monitors** or counterclockwise to raise the **Monitors**. *(Figure 13)*
3. *(Optional)* Turn the **Height-Adjustment Knob** with a hand to raise or lower the **Monitors**.

Figure 13

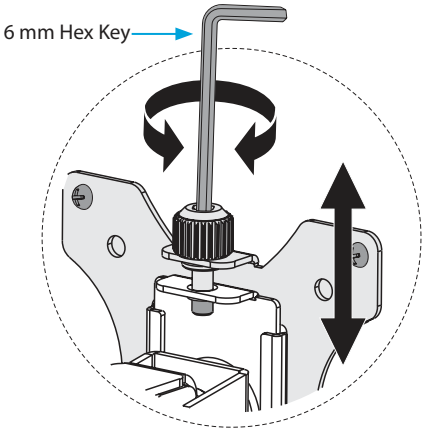

Cable Management

The **Power** and **Video Cables** from your **Monitors** can be organized and contained within the **Swivel Arms** and alongside the **Upper** and **Lower Poles**. To manage the **Cables** running to your **Monitors**, complete the following steps:

1. Connect the **Power** and **Video Cables** to each **Monitor**.
2. Route the **Cables** for the **Monitors** along the bottom of the **Swivel Arms.**
3. Locate the integrated **Cable-Management Channels** within the **Swivel Arms** and gently press the **Cables** into the **Channels**.

   Note: *If the* ***Cables*** *do not readily snap into the* ***Cable- Management Channels****, gently pull back one side of the* ***Cable-Management Channel*** *and feed the* ***Cables*** *into the* ***Channel****.*

4. Route the **Cables** along the **Upper** and **Lower Poles**, through the **Cable-Management Clips**, and towards the **Video Source(s)** and **Power Source(s)**. (Figure 14)

Figure 14

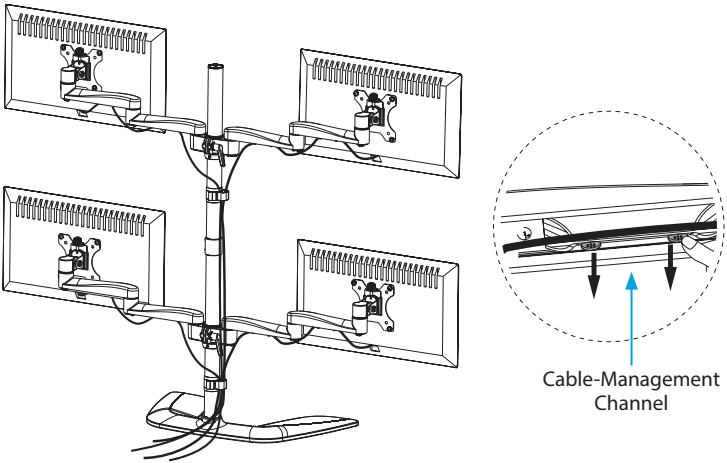

Warranty Information

This product is backed by a five-year warranty.

For further information on product warranty terms and conditions, please refer to www.startech.com/warranty.

Limitation of Liability

In no event shall the liability of StarTech.com Ltd. and StarTech.com USA LLP (or their officers, directors, employees or agents) for any damages (whether direct or indirect, special, punitive, incidental, consequential, or otherwise), loss of profits, loss of business, or any pecuniary loss, arising out of or related to the use of the product exceed the actual price paid for the product.

Some states do not allow the exclusion or limitation of incidental or consequential damages. If such laws apply, the limitations or exclusions contained in this statement may not apply to you.

Hard-to-find made easy. At StarTech.com, that isn't a slogan. It's a promise.

StarTech.com is your one-stop source for every connectivity part you need. From the latest technology to legacy products — and all the parts that bridge the old and new — we can help you find the parts that connect your solutions.

We make it easy to locate the parts, and we quickly deliver them wherever they need to go. Just talk to one of our tech advisors or visit our website. You'll be connected to the products you need in no time.

Visit www.startech.com for complete information on all StarTech.com products and to access exclusive resources and time-saving tools.

StarTech.com is an ISO 9001 Registered manufacturer of connectivity and technology parts. StarTech.com was founded in 1985 and has operations in the United States, Canada, the United Kingdom and Taiwan servicing a worldwide market.

Reviews

Share your experiences using StarTech.com products, including product applications and setup, what you love about the products, and areas for improvement.

StarTech.com Ltd.

45 Artisans Cres.

London, Ontario

N5V 5E9

Canada

StarTech.com LLP

2500 Creekside Pkwy.

Lockbourne, Ohio

43137

U.S.A.

StarTech.com Ltd.

Unit B, Pinnacle

15 Gowerton Rd., Brackmills

Northampton

NN4 7BW

United Kingdom

FR: fr.startech.com

DE: de.startech.com

ES: es.startech.com

NL: nl.startech.com

IT: it.startech.com

JP: jp.startech.com

To view manuals, videos, drivers, downloads, technical drawings, and more visit www.startech.com/support