StarTech.com
Hard-to-find made easy®

Universal Tablet Desk Stand

ARMTBLTDT

*actual product may vary from photos

FR: Guide de l'utilisateur - fr.startech.com
DE: Bedienungsanleitung - de.startech.com
ES: Guía del usuario - es.startech.com
NL: Gebruiksaanwijzing - nl.startech.com
PT: Guia do usuário - pt.startech.com
IT: Guida per l'uso - it.startech.com

For the latest information, technical specifications, and support for this product, please visit www.StarTech.com/ARMTBLDT.

Manual Revision: 12/07/2016

Use of Trademarks, Registered Trademarks, and other Protected Names and Symbols

PHILLIPS® is a registered trademark of Phillips Screw Company in the United States or other countries.

This manual may make reference to trademarks, registered trademarks, and other protected names and/or symbols of third-party companies not related in any way to StarTech.com. Where they occur these references are for illustrative purposes only and do not represent an endorsement of a product or service by StarTech.com, or an endorsement of the product(s) to which this manual applies by the third-party company in question. Regardless of any direct acknowledgement elsewhere in the body of this document, StarTech.com hereby acknowledges that all trademarks, registered trademarks, service marks, and other protected names and/or symbols contained in this manual and related documents are the property of their respective holders.

Warning statements

Make sure to assemble this product according to the instructions. Failure to do so might result in personal injury or property damage.

Never operate this product if parts are missing or damaged.

Wall structures vary, and it's important to make sure that the type of wall structure and mounting hardware that you're using will properly support the mounted equipment. Failure to do so may result in personal injury and/or equipment damage. The wall structure should be capable of supporting at least four times the weight of the mounted equipment.

The mounting hardware included with this product might not be adequate for some wall structures. If you lack the necessary expertise to attach this product to the wall structure that you're using, contact a construction professional to install the wall mount or to provide specific mounting instructions for your wall structure.

Varningsmeddelanden

Se till att du monterar produkten i enlighet med instruktionerna. Om du inte gör det kan skada på person eller egendom uppstå.

Använd aldrig produkten om delar saknas eller är skadade.

Eftersom väggstrukturer varierar är det viktigt att kontrollera att väggstrukturen och monteringsutrustningen som du använder klarar av den monterade utrustningen. Om du inte gör det kan skada på person och/eller utrustning uppstå. Väggstrukturen ska kunna klara av minst fyra gånger vikten av den monterade utrustningen.

Monteringsutrustningen som medföljer produkten kanske inte är lämplig för vissa väggstrukturer. Om du saknar nödvändiga kunskaper för att fästa denna produkt på väggstrukturen som du använder, kontakta en professionell konstruktör för att installera väggmonteringen eller för att ge specifika monteringsinstruktioner för din väggstruktur.

Avertissements

Assemblez ce produit conformément aux instructions. Si vous ne respectez pas ces instructions, vous risquez de vous blesser ou d'endommager l'équipement.

N'utilisez pas ce produit si des pièces sont endommagées ou manquantes.

Les structures des murs varient. Vous devez impérativement vérifier que le type de mur et le matériel de fixation que vous utilisez permettent de soutenir correctement l'équipement. Dans le cas contraire, vous risquez des blessures corporelles ou des dommages matériels. La structure du mur doit pouvoir supporter au moins quatre fois le poids de l'équipement monté.

Le matériel de fixation inclus avec ce produit n'est pas forcément approprié pour toutes les structures de murs. Si vous ne disposez pas des compétences nécessaires pour installer ce produit au mur, contactez un professionnel afin qu'il installe le support mural ou qu'il vous fournisse les instructions de montage spécifiques à votre structure de mur.

Warnhinweise

Montieren Sie dieses Produkt gemäß den Anweisungen. Anderenfalls kann dies zu Verletzungen von Personen oder Schäden an Eigentum führen.

Das Produkt darf nicht bedient werden, wenn Teile fehlen oder beschädigt sind.

Wandstrukturen unterscheiden sich, und es muss sichergestellt werden, dass die Wand und das verwendete Montagematerial das montierte Gerät halten kann. Anderenfalls kann dies zu Verletzungen von Personen und/oder Schäden an Geräten führen. Die Wand muss mindestens das Vierfache des Gewichts des montierten Geräts halten können.

Das mitgelieferte Montagematerial ist möglicherweise nicht für jede Wand geeignet. Wenn Ihnen die nötigen Fachkenntnisse zum Anbringen dieses Produkts an einer Wand fehlen, lassen Sie einen Fachmann den Wandhalter anbringen, oder lassen Sie sich von einem Fachmann Montageanweisungen für Ihre Wand erteilen.

Dichiarazioni di avvertenza

Assemblare il prodotto rispettando le istruzioni. Il mancato rispetto delle istruzioni potrebbe causare danni a persone o proprietà.

Non utilizzare il prodotto in presenza di parti mancanti o danneggiate.

Le caratteristiche dei muri sono variabili ed è importante verificare che la struttura muraria e l'hardware di montaggio in uso siano in grado di supportare adeguatamente le apparecchiature montate. Il mancato rispetto delle istruzioni potrebbe causare danni a persone o proprietà. La struttura muraria deve essere in grado di supportare un peso almeno quattro volte superiore a quello dell'apparecchiatura montata.

L'hardware di montaggio incluso con il prodotto potrebbe non essere adeguato ad alcune strutture murarie. Se l'utente non dispone delle competenze necessarie per agganciare il prodotto alla struttura muraria in uso, dovrà contattare un professionista edile per installare il supporto a parete o ottenere istruzioni di montaggio per la struttura muraria in uso.

Mensagens de aviso

Certifique-se de que monta este produto de acordo com as instruções. O incumprimento pode resultar em ferimentos pessoais ou danos de propriedade.

Nunca opere este produto se faltarem peças ou estas estiverem danificadas.

As estruturas de parede variam e é importante certificar-se de que o tipo de estrutura de parede e hardware de montagem que está a usar irá suportar devidamente o equipamento montado. O incumprimento pode resultar em ferimentos pessoais e/ou danos no equipamento. A estrutura de parede deve ser capaz de suportar pelo menos quatro vezes o peso do equipamento montado.

O hardware de montagem incluído com este produto pode não ser adequado para algumas estruturas de parede. Se não tiver o conhecimento necessário para fixar este produto à estrutura de parede que está a usar, contacte um profissional de construção para fazer a instalação em parede ou para fornecer instruções de montagem específicas para a sua estrutura de parede.

Advertencias de uso

Asegúrese de ensamblar este producto según las instrucciones. De lo contrario, pueden producirse lesiones personales o daños en la propiedad.

Nunca opere o ponga en funcionamiento este producto si faltan piezas o hay daños en las mismas.

Las estructuras de las paredes pueden variar y, por tanto, es importante determinar con certeza que el tipo de estructura de la pared y el hardware de montaje que se va a utilizar pueden soportar debidamente el equipo. De lo contrario, se pueden producir lesiones personales o daños en el mismo. La estructura de la pared debe ser capaz de soportar al menos cuatro veces el peso del componente instalado.

El hardware de montaje incluido con este producto puede no ser adecuado para algunas estructuras de pared. Si no tiene la experiencia suficiente para fijar este producto a la estructura de la pared correspondiente, póngase en contacto con un profesional de la construcción para instalar el soporte de pared o para que le proporcione las instrucciones específicas de montaje para su estructura de pared.

Waarschuwingen

Zorg dat dit product volgens de instructies in elkaar wordt gezet. Indien dit niet goed gebeurt kan lichamelijk letsel of materiële schade ontstaan.

Gebruik dit product nooit als er onderdelen ontbreken of beschadigd zijn.

Omdat wanden verschillen, is het belangrijk dat u ervoor zorgt dat het type wandstructuur en de montagemiddelen die u gebruikt de gemonteerde apparatuur goed ondersteunen. Indien u dit niet doet kan lichamelijk letsel en/of schade aan de apparatuur ontstaan. De wandstructuur moet voldoende zijn om ten minste vier keer het gewicht van de gemonteerde apparatuur te ondersteunen.

De bij dit product geleverde montagemiddelen kunnen niet geschikt zijn voor sommige wandstructuren. Als u onvoldoende kennis hebt om dit product aan de door u gebruikte wandstructuur te bevestigen, neem dan contact op met een bouwkundige om de steun aan de muur te installeren of specifieke montage-instructies voor uw wandstructuur te geven.

注意

必ず取扱説明書に従って本製品の組み立てを行って下さい。取り扱いを誤った場合に、傷害を負う恐れや物的損害が発生する恐れがあります。

本製品で使用している部品の一部が紛失していたり損傷している状態で使用するのは絶対に止めて下さい。

壁の構造はお客様の環境ごとに異なります。ご使用になる壁の構造タイプと取付け金具が、取り付けたモニターを確実に支持することを確認して下さい。確認を怠った場合、傷害を負う恐れや物的損害が発生する恐れがあります。壁の構造が、取り付けるモニター重量の最低 4 倍まで支持できるだけの強度を持っていなければなりません。

本製品に同梱されている取付け金具は、ご使用になる壁の構造に対して十分ではない場合があります。本製品を壁面に取り付ける時、十分な専門知識が不足していると判断された場合、専門業者に連絡を取って、本製品の取り付けを行ってもらうか、お客様の壁の構造に適した取り付け方法を教えてもらってから取り付けを行って下さい。

StarTech.com
Hard-to-find made easy®

Table of Contents

Warnings i

Package contents 1

Install the tablet arm on a table 3

Mount the tablet arm on a wall 5

Technical support 10

Warranty information 10

Package contents

1

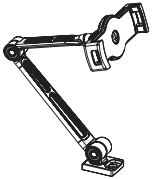

Tablet arm

Qty: One

2

Base

Qty: One

3

Wall plate

Qty: One

4

Decorative cover

Qty: One

5

Screws

Qty: Two

6

Concrete anchors

Qty: Two

7

2.5 mm hex key

Qty: One

8

3 mm hex key

Qty: One

9

4 mm hex key

Qty: One

10

Knob

Qty: One

- 1 x instruction manual

Install the tablet arm on a table

1. Slide the **tablet arm** into the depression in the **base** and push down.
2. Insert the **knob** into the **tablet arm** and **base**, and tighten the **knob**. (*figure 1*)

figure 1

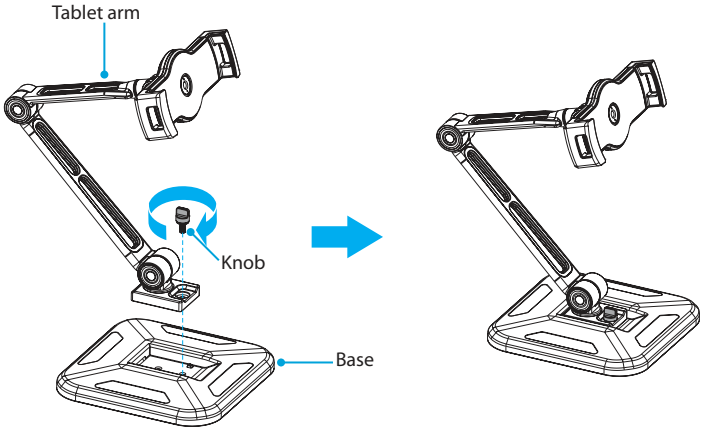

3. Spread the **clamps** apart.
4. Place a tablet inside of the **clamps**, and release the **clamps** around the tablet. (*figure 2*)

figure 2

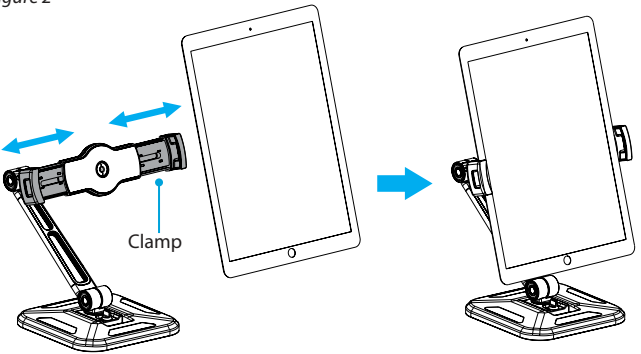

5. Use the provided **hex keys** to adjust the position of the **tablet arm**. To increase the swivel ability, turn the hex key clockwise. To decrease the swivel ability, turn the **hex key** counterclockwise. (*figure 3*)

figure 3

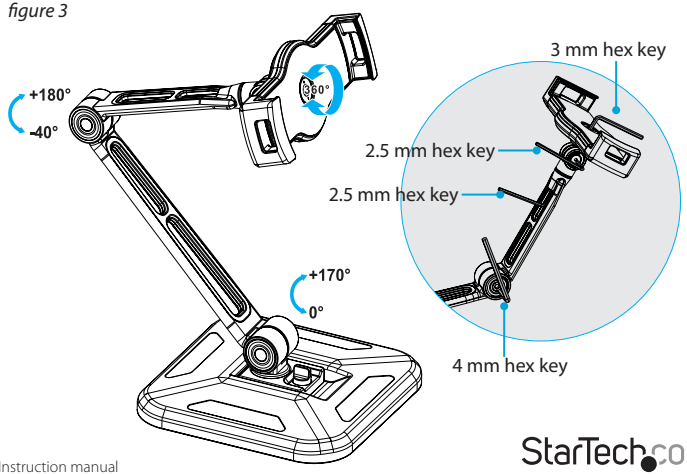

StarTech.com
Hard-to-find made easy®

Mount the tablet arm on a wall

Warning! Wall structures vary, and it is important that you make sure that the type of structure and mounting hardware that you are using will properly support the mounted equipment. Failure to do so may result in personal injury and/or equipment damage. The wall structure should be capable of supporting at least four times the weight of the mounted equipment.

Warning! The mounting hardware included with this product might not be adequate for some wall structures. If you lack the necessary expertise to attach this product to the wall that you are using, contact a construction professional to install the ARMTBLTDT or to provide specific mounting instructions for your wall structure.

1. Use a level to orientate the **wall plate** vertically.
2. Use the holes in the **wall plate** as a template and use a pencil to mark the location on the wall where you want to attach the **tablet arm**. (*figure 4*)
3. Follow the appropriate steps for the type of wall that you're using and attach the **tablet arm** to the wall.

figure 4

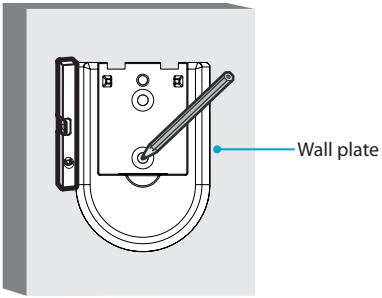

4. Slide the **tablet arm** into the depression in the **base**.
5. Insert the **knob** into the **tablet arm** and **wall plate**, and tighten the **knob**. (*figure 5*)

figure 5

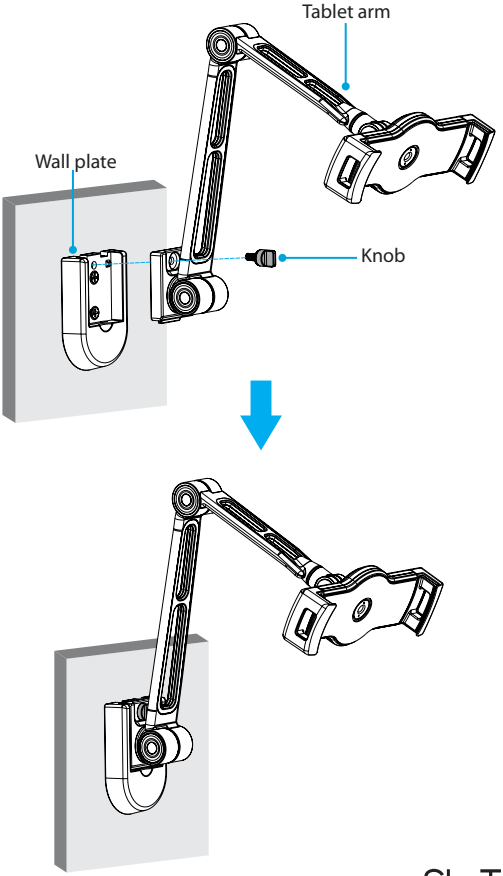

StarTech.com
Hard-to-find made easy®

6. Spread the **clamps** apart.
7. Place a tablet inside of the **clamps**, and release the **clamps** around the tablet. (*figure 6*)

figure 6

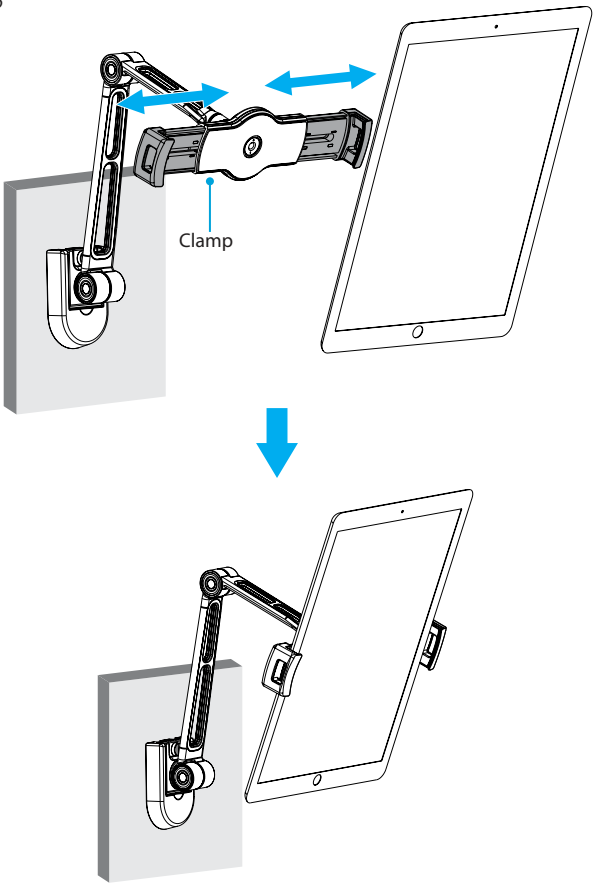

8. Use the provided **hex keys** to adjust the position of the **tablet arm**. To increase the swivel ability, turn the **hex key** clockwise. To decrease the swivel ability, turn the **hex key** counterclockwise. (*figure 7*)

figure 7

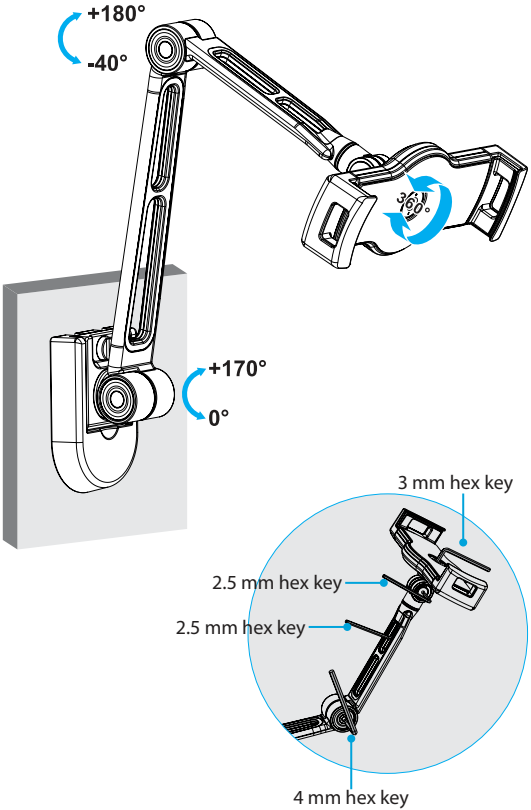

StarTech.com
Hard-to-find made easy®

9. To cover the **wall plate** when not in use, slide the **decorative cover** into the depression in the **wall plate**. (*figure 8*)

figure 8

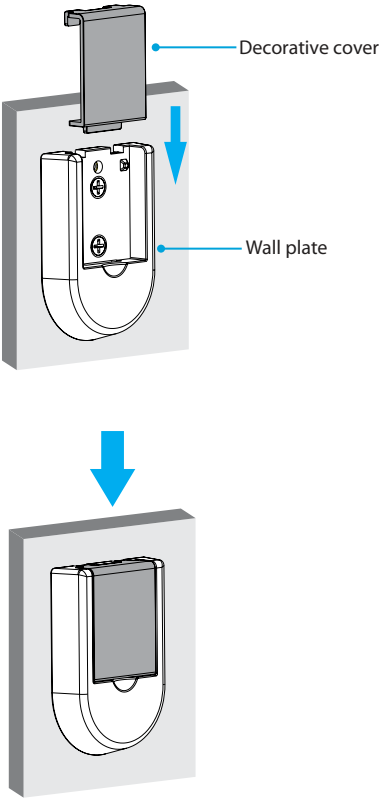

Technical support

StarTech.com's lifetime technical support is an integral part of our commitment to provide industry-leading solutions. If you ever need help with your product, visit **www.startech.com/support** and access our comprehensive selection of online tools, documentation, and downloads.

For the latest drivers/software, please visit **www.startech.com/downloads**

Warranty information

This product is backed by a two-year warranty.

StarTech.com warrants its products against defects in materials and workmanship for the periods noted, following the initial date of purchase. During this period, the products may be returned for repair, or replacement with equivalent products at our discretion. The warranty covers parts and labor costs only. StarTech.com does not warrant its products from defects or damages arising from misuse, abuse, alteration, or normal wear and tear.

Limitation of liability

In no event shall the liability of StarTech.com Ltd. and StarTech.com USA LLP (or their officers, directors, employees or agents) for any damages (whether direct or indirect, special, punitive, incidental, consequential, or otherwise), loss of profits, loss of business, or any pecuniary loss, arising out of or related to the use of the product exceed the actual price paid for the product. Some states do not allow the exclusion or limitation of incidental or consequential damages. If such laws apply, the limitations or exclusions contained in this statement may not apply to you.

Hard-to-find made easy. At StarTech.com, that isn't a slogan. It's a promise.

StarTech.com is your one-stop source for every connectivity part you need. From the latest technology to legacy products — and all the parts that bridge the old and new — we can help you find the parts that connect your solutions.

We make it easy to locate the parts, and we quickly deliver them wherever they need to go. Just talk to one of our tech advisors or visit our website. You'll be connected to the products you need in no time.

Visit www.startech.com for complete information on all StarTech.com products and to access exclusive resources and time-saving tools.

StarTech.com is an ISO 9001 Registered manufacturer of connectivity and technology parts. StarTech.com was founded in 1985 and has operations in the United States, Canada, the United Kingdom and Taiwan servicing a worldwide market.