Simply Better Connections™

USB 2.0 DVI KVM Switch

USER MANUAL

CS682

EMC Information

FEDERAL COMMUNICATIONS COMMISSION INTERFERENCE STATEMENT: This equipment has been tested and found to comply with the limits for a Class A digital device, pursuant to Part 15 of the FCC Rules. These limits are designed to provide reasonable protection against harmful interference when the equipment is operated in a commercial environment. This equipment generates, uses, and can radiate radio frequency energy and, if not installed and used in accordance with the instruction manual, may cause harmful interference to radio communications. Operation of this equipment in a residential area is likely to cause harmful interference in which case the user will be required to correct the interference at his own expense.

The device complies with Part 15 of the FCC Rules. Operation is subject to the following two conditions: (1) this device may not cause harmful interference, and (2) this device must accept any interference received, including interference that may cause undesired operation.

FCC Caution: Any changes or modifications not expressly approved by the party responsible for compliance could void the user's authority to operate this equipment.

Warning: Operation of this equipment in a residential environment could cause radio interference.

KCC Statement

유선 제품용 / A 급 기기 (업무용 방송 통신 기기)
이 기기는 업무용 (A 급) 전자파적합기기로서 판매자 또는 사용자는 이 점을 주의하시기 바라며 , 가정 외의 지역에서 사용하는 것을 목적으로 합니다 .

RoHS

This product is RoHS compliant.

CS682 User Manual

Online Registration

International	http://eservice.aten.com

Telephone Support

International	886-2-8692-6959
China	86-400-810-0-810
Japan	81-3-5615-5811
Korea	82-2-467-6789
North America	1-888-999-ATEN ext 4988 1-949-428-1111

Technical Support

- For international online technical support – including troubleshooting, documentation, and software updates: **http://eservice.aten.com**
- For North American technical support:

Email Support		support@aten-usa.com
Online Technical Support	Troubleshooting Documentation Software Updates	http://www.aten-usa.com/support
Telephone Support		1-888-999-ATEN ext 4998

Package Contents

The CS682 USB 2.0 DVI KVM Switch package contains the following items:

- 1 CS682 2-Port USB 2.0 DVI KVM Switch
- 1 Remote Port Selector
- 1 User Manual*
- 1 Quick Start Guide

Check to make sure that all the components are present and that nothing got damaged in shipping. If you encounter a problem, contact your dealer.

Read this manual thoroughly and follow the installation and operation procedures carefully to prevent any damage to the unit, and/or any of the devices connected to it.

---

* Features may have been added to the CS682 since this manual was printed. Please visit our website to download the most up-to-date version of the manual.

Copyright © 2019 ATEN® International Co., Ltd.
Manual Date: 2019-11-15 - Manual Part No. PAPE-1337-AT5G

ATEN and the ATEN logo are trademarks of ATEN International Co., Ltd. All rights reserved. All other trademarks are the property of their respective owners.

Overview

The CS682 takes a giant step forward from prior cable KVM models in the Petite series, by offering DVI functionality, USB 2.0 peripheral sharing (via a USB hub attached to the USB mouse port), a rich bass experience for 2.1 surround systems, and a firmware upgrade function that allows you to keep up with latest available versions.

Another new feature of the CS682 is the implementation of a remote port selector. This means that you can now control port switching from the desktop while the switch itself can be placed in a convenient, out-of-the-way, location. Also, in addition to new hotkeys, the CS682 offers the latest mouse port-switching function – simply double-click on the scroll wheel of a USB mouse to change ports.

Furthermore, the CS682 features enhanced Video DynaSync technology, which eliminates boot-up display problems and optimizes resolution when switching between ports.

Finally, the CS682's new Power on detection feature means that if one of the computers is powered off, switch will automatically switch to the other powered-on computer.

Featuring an unbeatable combination of DVI functionality, USB 2.0 peripheral sharing convenience, and enhanced user-friendly operations, the CS682 allows users to keep up with the latest innovations in desktop multimedia applications.

Features

- One DVI video console controls two USB computers
- Fully DVI-Digital specification compliant
- Computer selection via remote port selector, hotkeys, and USB mouse
- Audio-enabled – full bass response provides a rich experience for 2.1 channel surround sound systems
- Multiplatform support – Windows 2000 / XP / Vista / 7, Mac, Sun, Linux
- Compact design, built-in all-in-one cables (2 x 1.2 m)
- Superior video quality – up to 1920 x 1200
- Compatible with widescreen LCD monitors
- Video DynaSync – exclusive ATEN technology which eliminates boot-up display problems and optimizes resolution when switching between ports
- Power on detection – if either of the computers is powered off, the CS682 will automatically switch to the other computer
- Supports multimedia keyboards
- Supports wireless keyboards and mice
- Console mouse port emulation/bypass feature supports most mouse drivers and multifunction mice
- Mac/Sun keyboard support and emulation*
- USB 2.0 mouse port can be used for USB hub and USB peripheral sharing
- HDCP Compliant
- Non-Powered
- Firmware upgradable

Note: 1. PC keyboard combinations emulate Mac/Sun keyboards.

2. Mac/Sun keyboards work only with their own computers.

---

3. To use the USB 2.0 mouse port as a USB hub, you must first disable mouse emulation mode. See *Hotkey Summary Table*, page 15 for information.

System Requirements

Console

- A DVI monitor capable of the highest resolution that you will be using on any computer in the installation
- A USB Keyboard and a USB Mouse
- Speakers and microphone (optional)

Computers

The following equipment must be installed on each computer that is to be connected to the system:

- A DVI video port
- USB Type A port
- Speaker and microphone ports (optional)

Cables

The CS682's innovative design features built-in KVM and audio cables for extra convenience. No further cables are necessary.

Operating Systems

Supported operating systems are shown in the table, below:

OS		Version
Windows		2000 / XP / Vista / 7
Linux	RedHat	6.0 and higher
	SuSE	8.2 and higher
	Mandriva (Mandrake)	9.0 and higher
UNIX	AIX	4.3 and higher
	FreeBSD	3.51 and higher
	Sun	Solaris 9 and higher
Novell	Netware	5.0 and higher
Mac		OS 9 and higher
DOS		6.2 and higher

Components

CS682

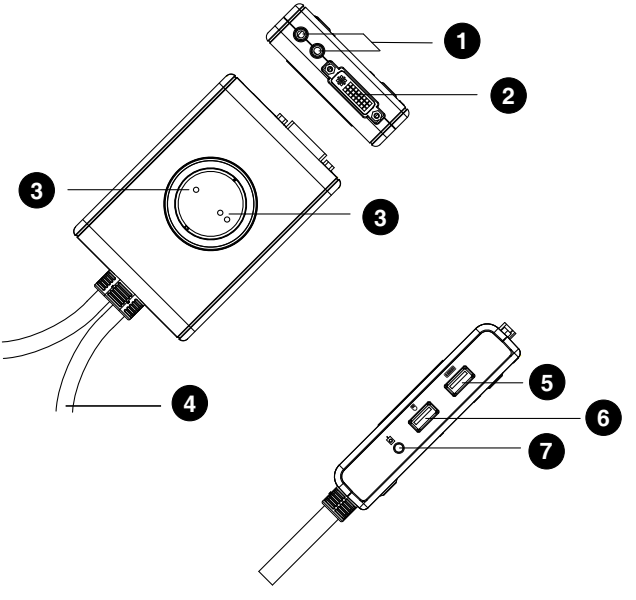

Remote Port Selector

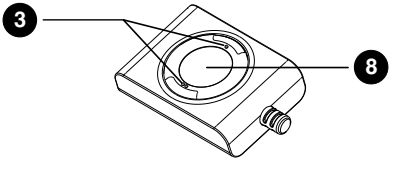

No.	Component	Description
1	Console Audio Ports	Your console speakers and microphone plug in here.
2	Console Monitor Port	Your console DVI monitor plugs in here.
3	Port LEDs	The Port LEDs indicate status. The LED lights **on** to indicate that the computer attached to the corresponding port is selected and has the KVM focus. The LED **flashes** to indicate that the computer attached to its corresponding port is being scanned by the Auto Scan function. The LED is **off** to indicate the port is not selected.
4	KVM Cable	The connectors on the built-in KVM cables attach to the two computers in your CS682 installation. See the diagram on page 12 for further details.
5	Console Keyboard Port	Your console USB keyboard plugs in here.
6	Console Mouse Port	Your console USB mouse plugs in here.
7	Remote Port Selector Jack	The Remote Port Selector plugs in here.
8	Port Selection Pushbutton	Press the Port Selection Pushbutton to toggle the KVM and Audio focus between the two computers.

Installation

1. Make sure that the power to any device that you connect to the installation has been turned off. You must unplug the power cords of any computers that have the *Keyboard Power On* function.
2. To prevent damage to your installation from power surges or static electricity. It is important that all connected devices are properly grounded.

1. Plug your keyboard and mouse into their USB ports, located on the side of the CS682. The ports are color coded and labeled with an appropriate icon.

Note: The mouse connector is actually a USB 2.0 port, and can accept any USB compatible peripheral. You can even connect a hub to install multiple USB devices (This may require an extra power adapter).

---

2. Plug your monitor into the DVI port, located on the front of the CS682. Power on the monitor.
3. Plug your speakers and microphone into the console audio ports, located on the front of the CS682 (Optional).
4. Plug the USB, video, and audio connectors of the KVM cables into their respective ports on the computers you are installing.
5. If you choose to use the remote port selector, plug its cable into the remote port selector jack, located on the side of the unit.
6. Power on the computers.

Note:

- By default the switch links to the first computer that is powered on.
- Make sure the computers and devices that the CS682 connects to are also properly grounded.

Installation Diagram

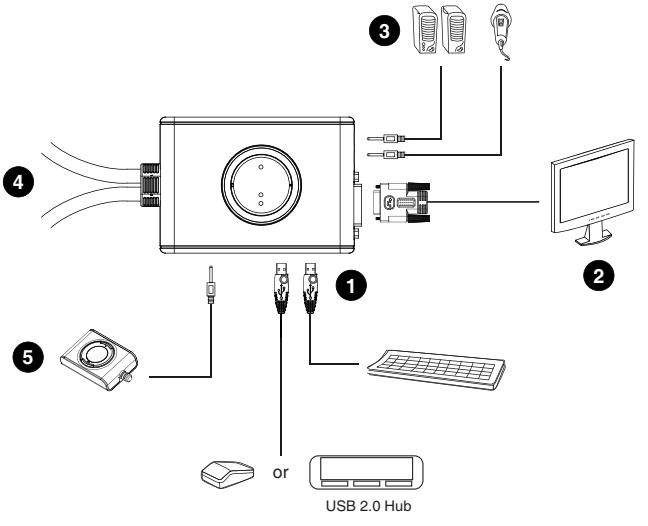

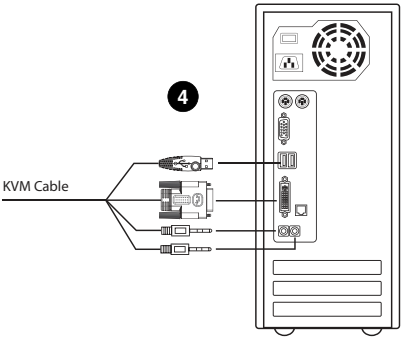

Operation

The CS682 provides three convenient methods of selecting computers: Manual – click the pushbutton on the Remote Port Selector; Mouse – click the mouse's scroll wheel; and Hotkey – enter combinations from the keyboard.

Manual Port Selection

Press the port selection pushbutton on the Remote Port Selector to toggle the KVM and Audio focus between the two computers. The Port LED lights to indicate that the computer attached to its corresponding port has the focus.

Note: Do not switch ports while a USB device is in operation. For independent USB switching, please see the USB KVMP switches on our website.

Mouse Port Selection

Simply double-click the scroll wheel on your USB mouse to switch between ports. The mouse port-switching function allows you to toggle back and forth between the ports.

Note:

1. This feature is only supported by USB 3-key scroll wheel mice.
2. The default setting is OFF.
3. This feature is only supported when mouse emulation is also enabled.

See *Hotkey Summary Table*, page 15 for further details.

Hotkey Port Selection

All hotkey operations begin by tapping the **Scroll Lock** key twice. See the *Hotkey Summary Table* for full details.

Note: If using [Scroll Lock] conflicts with other programs, [Ctrl] can be used instead.

Alternate Entering Hotkey Mode

- Press [Scroll Lock] [Scroll Lock] [x] [Enter]. The entering hotkey mode hotkey is now [Ctrl].

or

- Press and hold the remote port selector switch for three seconds. The entering hotkey mode hotkey is now [Ctrl].

Note: These procedures toggle between the two methods.

Hotkey Summary Table

Combination		Function
[Scroll Lock] [Scroll Lock] +	[Enter]	Toggles the KVM and Audio focus between the two ports. If the KVM and Audio focus are on different ports, only the KVM focus switches.
	[k] [Enter]	Only toggles the KVM focus.
	[s] [Enter]	Only toggles the Audio focus.
	[a] [Enter] [n]	Starts Auto Scan. The KVM focus cycles from port to port at **n** second intervals. **Note:** Replace **n** with a number between 1 and 4 (see *Scan Interval Table* below). To exit Auto Scan, press [Esc] or [Spacebar]. Auto Scanning stops when you exit Auto Scan mode.
	[x] [Enter]	Toggles the hotkey invocation key between [Scroll Lock] and [Ctrl].
	[m] [Enter]	Enables/disables mouse emulation function.
	[w] [Enter]	Enables/disables mouse port-switching function.
	[F2] [Enter]	Activates Mac keyboard mapping.
	[F3] [Enter]	Activates Sun keyboard mapping.
	[F10] [Enter]	Auto detects keyboard operating platform.
	[F4] [Enter]	Lists current switch settings.
	[F5] [Enter]	Performs a USB keyboard and mouse reset.
	[d] [Enter]	Invokes the Video DynaSync function, which eliminates boot-up display problems and optimizes resolution when switching between ports.
	[e] [Enter]	Enables/Disables the Power on Detection feature.
	[r] [Enter]	Resets hotkeys to the default setting.

Scan Interval Table

n	Secs.
1	3 secs.
2	5 secs. (default)
3	10 secs.
4	20 secs.

Keyboard Emulation

PC Keyboard	Mac Keyboard	PC Keyboard	Sun Keyboard
[Shift]	Shift	[Ctrl] [T]	Stop
[Ctrl]	Ctrl	[Ctrl] [F2]	Again
	⌘	[Ctrl] [F3]	Props
[Ctrl] [1]		[Ctrl] [F4]	Undo
[Ctrl] [2]		[Ctrl] [F5]	Front
[Ctrl] [3]		[Ctrl] [F6]	Copy
[Ctrl] [4]		[Ctrl] [F7]	Open
[Alt]	Alt	[Ctrl] [F8]	Paste
[Print Screen]	F13	[Ctrl] [F9]	Find
[Scroll Lock]	F14	[Ctrl] [F10]	Cut
	=	[Ctrl] [1]	
[Enter]	Return	[Ctrl] [2]	-
[Backspace]	Delete	[Ctrl] [3]	+
[Insert]	Help	[Ctrl] [4]	
[Ctrl]	F15	[Ctrl] [H]	Help
			Compose
			◆

Note: When using key combinations, press and release the first key (Ctrl), then press and release the activation key.

The Firmware Upgrade Utility

To upgrade the CS682's firmware, do the following:

1. From a computer that is not part of your KVM installation, download the latest Firmware Upgrade package for the CS682 from our Internet support site (`www.aten.com`).
2. Disconnect the CS682 from your KVM installation. Press and hold the Remote Port Selector's pushbutton. While you are still holding the pushbutton, connect the KVM cable's purple USB connector to a USB port on the computer you have downloaded the Firmware Upgrade package to.
3. The CS682 now enters Firmware Upgrade Mode. The two Ports LEDs flash together to indicate that the unit is in Firmware Upgrade Mode.

Note: While the CS682 is in Firmware Upgrade Mode, normal keyboard and mouse functions are suspended. You must complete the firmware upgrade or exit Firmware Upgrade Mode to regain normal control of the console.

---

4. Run the Firmware Upgrade Package file. The *Firmware Upgrade Utility* Welcome screen appears.
5. Read the License Agreement and enable to *I Agree* button.
6. Click **Next** to continue. The Firmware Upgrade Utility main screen appears. All the devices capable of being upgraded by the package are listed in the *Devices List* panel.
7. Select your device. Its description appears in the Device Description panel. Click **Next** to perform the upgrade.

   As the upgrade proceeds, status messages appear in the Status Messages panel, and the progress towards completion is shown in the *Progress* bar.
8. After the upgrade has completed, a screen appears to inform you that procedure was successful. Click **Finish** to close the Firmware Upgrade Utility.
9. Set up your KVM installation again. See *Installation*, page 11.

Upgrade Failed

If the Upgrade Succeeded screen doesn't appear, it means that the upgrade failed to complete successfully, in which case you should do the following:

1. Disconnect the USB connectors on the KVM cables from the computer.
2. Press and hold the Remote Port Selector's pushbutton. While you are still holding the pushbutton, reconnect the KVM cable's USB connectors to the computer.
3. Power on the CS682. It will now work with the factory default firmware. Follow steps 3 to 9 on page 17 again.

Troubleshooting

Symptom	Possible Cause	Action
Monitor does not display after the KVM cable set is hot-plugged.	DVI graphics card is not compatible with cable set hot-plugging.	Power off all devices on the installation; power off the CS682; confirm all KVM cables are properly connected; power on the CS682; power on the computers.
	Graphics card driver is not up-to-date.	Upgrade to the latest graphics card driver.
Mouse and/or keyboard is not responding.	Switch needs to be reset.	Power off all devices on the installation; power off the CS682; wait five seconds; power on the CS682 again.
Mouse port-switching function is not responding.	Mouse does not support this function.	This feature is only supported by USB 3-key scroll wheel mice.
	Mouse emulation is disabled.	Enable mouse emulation. See *Hotkey Summary Table*, page 15, for details.
Cannot switch ports by pressing [Scroll Lock] twice.	Keyboard is incompatible with [Scroll Lock] invocation.	Switch to the alternate HSM invocation keys. See *Alternate Entering Hotkey Mode*, page 14, for details.

Specifications

Function			CS682
Computer Connections			2
Console Connections			1
Port Selection			Remote Port Selector, Mouse, Hotkeys
Connectors	Console Ports	KB	1 x USB Type A Female (Silver)
		Video	1 x DVI-D Female (White)
		Mouse	1 x USB Type A Female (Silver)
		Speakers	1 x Mini Stereo Jack Female (Green)
		Mic.	1 x Mini Stereo Jack Female (Pink)
	KVM Ports	KB	2 x USB Type A Male (Purple)
		Video	2 x DVI-D Male (Black)
		Mouse	2 x USB Type A Male (Black)
		Speakers	2 x Mini Stereo Jack Male (Green)
		Mic.	2 x Mini Stereo Jack Male (Pink)
	Remote Port Selector		1 x 2.5mm Audio Jack Female
LEDs	KVM		2 (Green)
	Remote Port Selector		2 (Green)
Cable Length	KVM		2 x 1.2 m
	Remote Port Selector		1. 8 m
Emulation	KB / Mouse		USB
Video			1920 x 1200
Scan Interval			3, 5, 10, 20 secs. (default 5 secs.)
Power Consumption			DC5V: 1.95W: 22BTU
Environment	Operating Temp.		0–50ºC
	Storage Temp.		-20–60ºC
	Humidity		0–80% RH, Non-condensing
Physical Properties	Housing		Plastic
	Weight		0.49 kg
	Dimensions (L x W x H)		11.15 x 7.80 x 2.40 cm

Factory Default Hotkey Settings

Setting	Default
Port Switching	[Scroll Lock] [Scroll Lock]
Auto Scan Interval	5 seconds
Keyboard Operating Platform	PC Compatible
Mouse Emulation	On
Mouse Port-Switching	Off
Power on Detection	Enabled

Limited Warranty

ATEN warrants its hardware in the country of purchase against flaws in materials and workmanship for a Warranty Period of two [2] years (warranty period may vary in certain regions/countries) commencing on the date of original purchase. This warranty period includes the LCD panel of ATEN LCD KVM switches. Select products are warranted for an additional year (see *A+ Warranty* for further details). Cables and accessories are not covered by the Standard Warranty.

What is covered by the Limited Hardware Warranty
ATEN will provide a repair service, without charge, during the Warranty Period. If a product is detective, ATEN will, at its discretion, have the option to (1) repair said product with new or repaired components, or (2) replace the entire product with an identical product or with a similar product which fulfills the same function as the defective product. Replaced products assume the warranty of the original product for the remaining period or a period of 90 days, whichever is longer. When the products or components are replaced, the replacing articles shall become customer property and the replaced articles shall become the property of ATEN.

To learn more about our warranty policies, please visit our website:

http://www.aten.com/global/en/legal/policies/warranty-policy