MANUAL

Salente

MODEL	VERSION / DATE
L7	VIII. / 15. 11. 21

EN

Wecome to use

Thanks for choosing Salente L7!

It is a high-end intelligent planning cleaning robot which combines high accuracy radar and various sensors can realize collaboration through navigation algorithm, draw a room map in real time and plan the cleaning route and features automatic cleaning and automatic charging without manual intervention. It has ultrastrong suction power, high-capacity drawer type dust box, washable HEPA filter screen and split type mopping module and adopts an efficient cleaning mode of first cleaning and then mopping.

You can download the mobile APP by smart phone to check the cleaning map and running status of the robot in APP in real time, define the cleaning area and schedule. You can control the robot remotely.Science and technology makes life better.

May you have a nice usage experience!

Product Introduction

Key Function

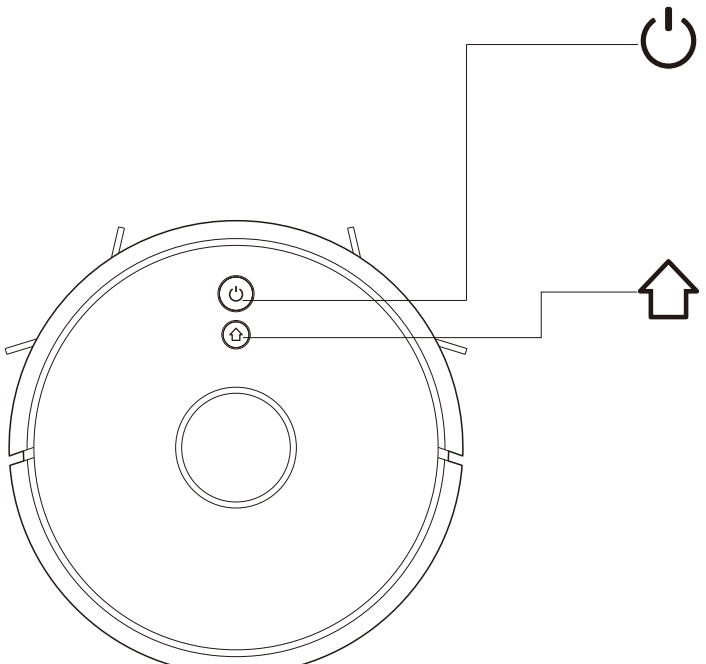

Sweep/ON &OFF

- Short press to start Sweep/Pause
- Long press for 3s for ON/OFF
- Long press for 15s for forced shutdown under abnormal circumstances

Recharging/ local cleaning

- Short press Recharge/Pause
- Long press to start local cleaning

Indicator light

- Blue: Normal operation or charging
- Red: Abnormal condition or low battery
- Purple: Equipment is not connected to the network

Reset WiFi

- Press two buttons simultaneously for 3s

Product Introduction

Parts List

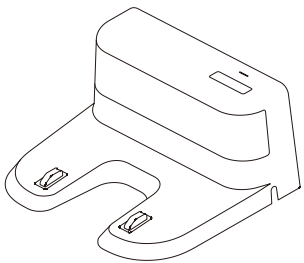

Charging base

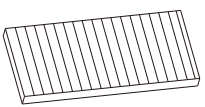

HEPA filter+sponge filter

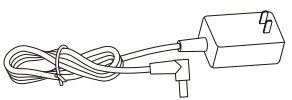

Adapter

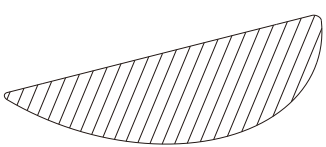

Duster cloth 2x

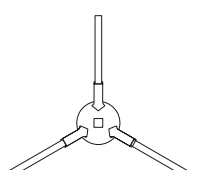

2x Left side brush
2xRight side brush

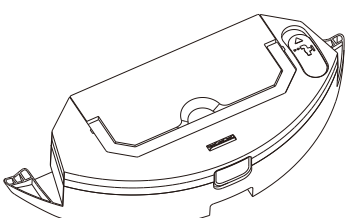

Electric-controlled water tank

Remote control

Product Introduction

Robot

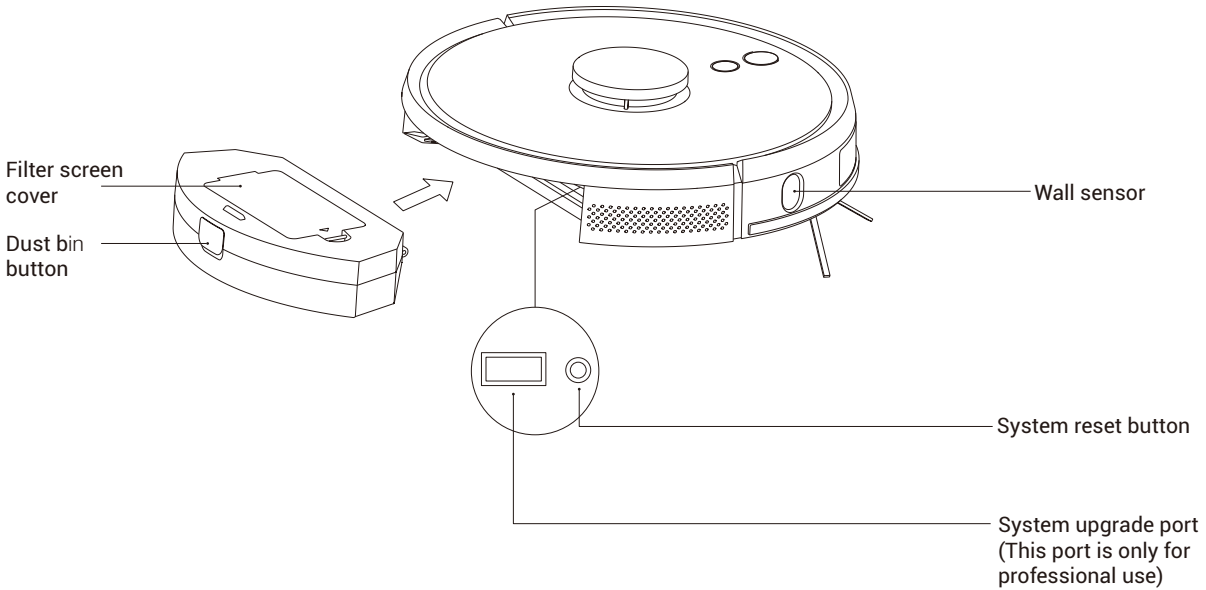

Product Introduction

Sensor and Structure

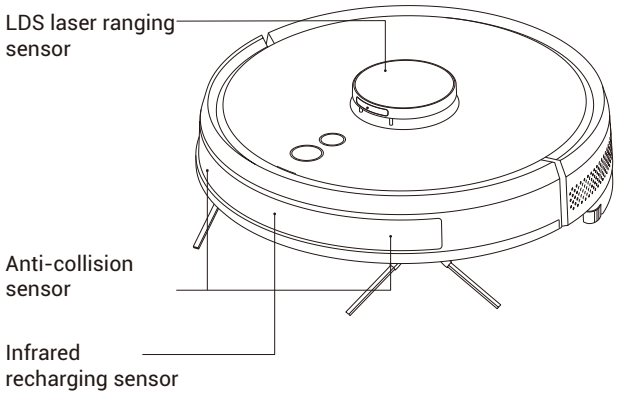

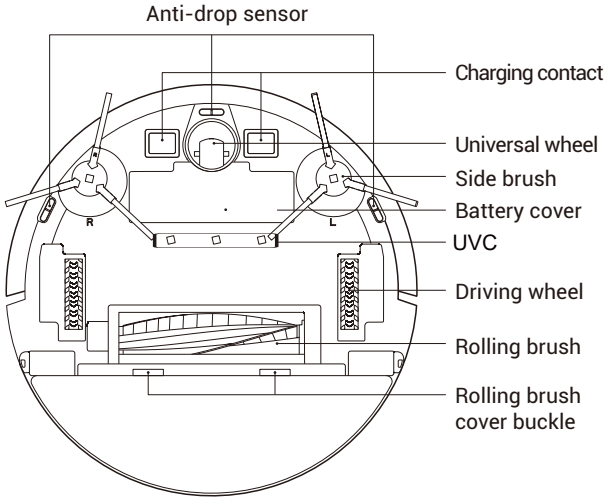

Product Introduction

Charging Base

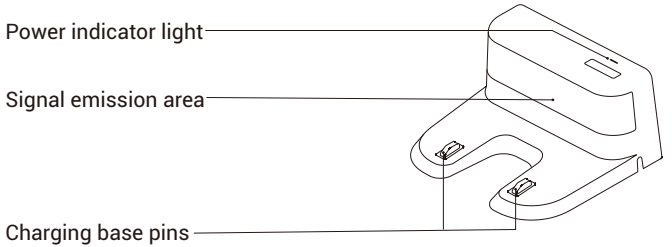

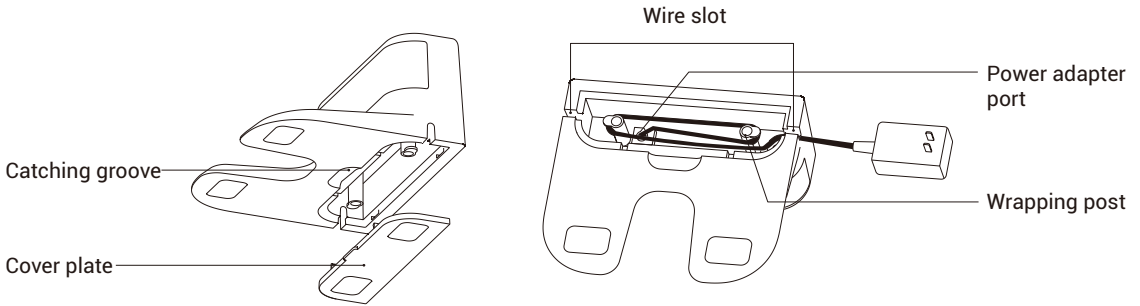

Installation

1 Connect power line and feed the excess wire into the slot

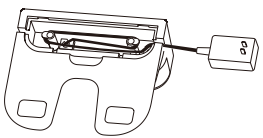

2 Place charging base against the wall and connect the power

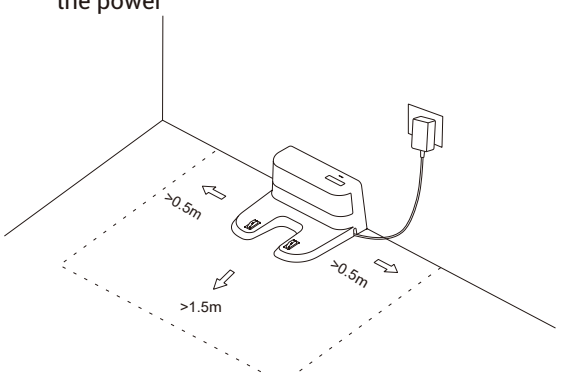

Note

Ensure a space of above 0.5m on both sides of the charging base and a space of above 1.5m in the front

If the power line is vertical to the ground, it may be dragged by the host and consequently the charging base may be powered off

The charging indicator is normally on when powered on and off when charged

3 Please do not move the charging base arbitrarily and keep it out of direct sunlight

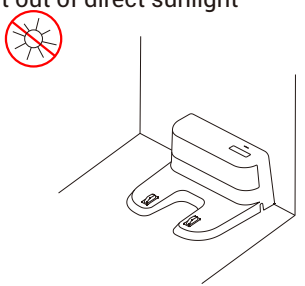

Note

If the charging base is relocated, the host may fail in positioning and lose the map. When restarted, the host will rebuild and memorize the map and the rebuilt map may lose cleaning information of forbidden areas and other areas

Direct sunlight will interfere with recharging signal and consequently the host may be unable to return to the charging base

4 Installation of side brush

Make the left side brush (L) and the right side brush (R) correspond to L and R on the bottom casing, press L and R and the side brushes are installed till you hear a " cracking " sound

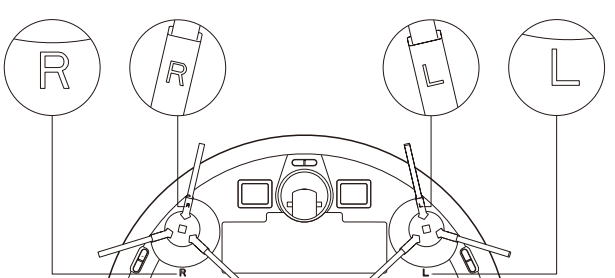

Installation

5 Starting up and charging

Long press ⏻ to switch on the robot.Charge the robot on charging base when the power indictor light is normally on

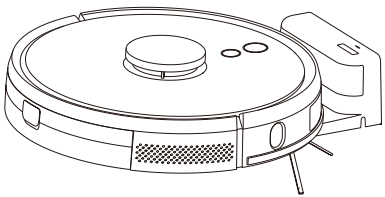

Note If the machine cannot be started due to low battery, please charge the host on the charging base and the machine will be started automatically. The machine can work normally only when the battery level is ≥20%

6 Connect mobile APP(this step can be skipped)

Please refer to WiFi connection guideline, then connect mobile APP

7 Start cleaning

After the robot is powered on, short press key ⏻ on the robot or use mobile APP to start cleaning.(press any button to pause during using)

Note

-The sweeping robot cannot be used to remove liquids

If the battery level is less than 20, the machine cannot work. Please charge it

The machine will return to the charging base automatically if the battery level is less than 20% in use and will be powered off and start cleaning automatically after the battery level reaches 80%

-Please clear various wires (including power line of charging base) on the ground before use so as to avoid outage and damage of objects or wires when wires are dragged by the host

8 Installation of mopping module

Installation of mopping cloth: paste the mopping cloth flatly to the bottom of water tank

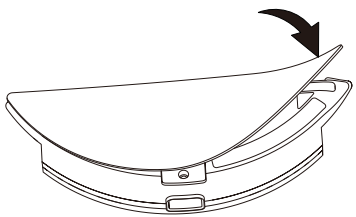

2 in 1 Electric-controlled water tank

Note: please clean the mopping cloth after using to keep it in good cleaning condition

Installation

Fill the water tank: uncap the cover and fill with water

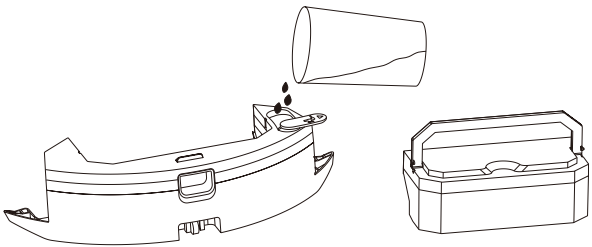

2 in 1 Electric-controlled water tank

Intall the module: Push the module horizontally along the rear part of the robot. The module is installed in place if you hear a "click" sound

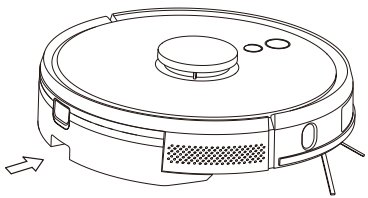

2 in 1 Electric-controlled water tank

9 Remove the mopping module

When the robot is finished working, press the button in the middle of the water tank to remove the mopping module backwards, empty the water in the water tank and clean the mopping cloth (do not move or turn the robot over during cleaning)

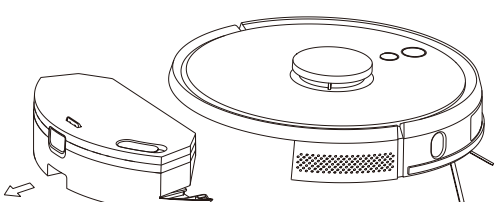

2 in 1 Electric-controlled water tank

Installation

10 Instructions for mopping module

For the sake of safety, please be sure to remove the mopping module when it is being charged or left unused

Please do not mop the carpet. Set a forbidden area in APP to prevent the machine from entering the carpet

To add water or clean the dust cloth when the machine works, please pause it, and take out and reassemble the mopping module according to steps 8 and 9. Please do not move or turn over the host so as to avoid failing in positioning and losing the map

Mopping function of the machine is intended for wiping and is conducive to deep cleaning. it cannot remove stubborn stain effectively and replace labor force

Instructions

ON/OFF

Long press ⏻ key for 3s, the indicator light is on and the machine is started

Long press ⏻ key for 3s when the machine is under standby mode, the indicator light is off and the machine shuts down

NOTE: The machine cannot shut down when the host is being charged

Sweep/Pause

After the machine is started, short press ⏻ key on the host or start the machine using mobile APP

Press any key to pause in use

Note

The cleaning robot cannot be used to remove liquids

If the battery level is less than 20, the machine cannot work. Please charge it

The machine will return to the charging base automatically if the battery level is less than 20% in use and will be powered off and start cleaning automatically after the battery level reaches 80%

Please clear various wires (including power line of charging base) on the ground before use so as to avoid outage and damage of objects or wires when wires are dragged by the robot

Charging

Automatic mode The robot will return to the charging base automatically after work

Manual mode Under suspended state, short press ⌂ key to start recharging or when the recharging host is charged under the control of mobile APP, The indicator light is under breathing mode when the recharging host is charged

Note: if the robot can not find the charging base, it will automatically return to the starting position. Please manually put the robot back to the charging base for charging

Instructions

Cleaning mode

After the robot is powered on, it will scan and generate the map and divide it into areas intelligently. Then sweep the areas one by one along the wall orderly, efficiently and thoroughly and plan the cleaning route in a bow/S shape. The robot will return to the charging base automatically after cleaning

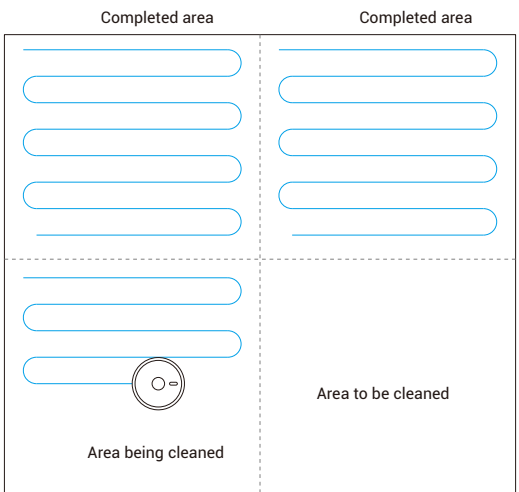

Note:

Do not move the robot casually and frequently when it is cleaning. After moving, please put the robot near the original position. When it starts again, it will try to reposition itself. After successful positioning, it would follow the planned path and continue to work. If the positioning fails, the robot would abort previous mission, make a map and do the cleaning again. Even it maynot find the charging base

Spot cleaning

When a local area needs a deep sweep, the user specifies a point on the map on the APP, the machine will automatically drive to the vicinity of the point, take the point as the center, and clean within 1.5m x 1.5m

Partial cleaning

When the robot cannot be controlled by the mobile APP, please remove the robot to the place you want to clean. Long press the ⇧ button on robot for 3 seconds, and the robot will clean twice within the scope of 1.8mx1.8m centering on itself

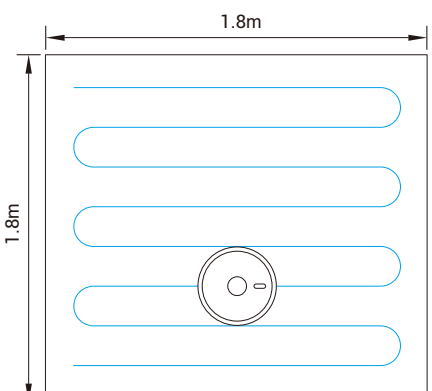

Y-mop floor scrubbing mode

User-defined area cleaning

Use the mobile APP to set the size and location of the area you want to clean. You can set one or more areas. The robot would clean according to the areas you set

Y-Scrubbing mode

The robot features Scrubbing mode, with which it smartly scrubs and mops for you thank to its sway movement.

Restricted area

Set one or more forbidden areas using mobile APP. The robot will not sweep forbidden areas but other areas

Note

- The robot may intrude into the restricted area due to positioning errors, abnormal sensors and other reasons.
- The permanent closed zone may become invalid due to the big change of the position of the charging seat and furniture. Therefore, please try not to move or interfere with the robot during cleaning.
- The permanent restricted area would be lost when the map is rebuilt

Schedule cleaning

Schedule cleaning can be set by mobile APP. The robot will start cleaning automatically at the appointed time and return to the charging base after cleaning.

WiFi reset

If the mobile phone cannot be connected to the machine due to modification of router configuration and password or for other reasons, please press ⇧ key and ⏻ key simultaneously for 3s till a voice prompt “WiFi has been reset” is given and the indicator light turns purple and flickers slowly

DND mode

The robot will neither sweep the floor nor issue a voice automatically under DND mode. The available time of DND mode can be startup or modified using mobile APP

Adjustment of suction power

You can adjust the suction power to silent level, standard level and high level by mobile APP

Adjustment of water flow (only for electric-controlled water tank)

You can adjust the water flow to low level, stardard level and high level by mobile level

Instructions

UVC function

In APP, there are 3 selection buttons for UVC function: UVC OFF, UVC ON, Sterilization mode
1. Press UVC OFF, UV light is off.
2. Press UVC ON, UV light is on, robot can work in every normal mode.
3. Press Sterilization mode, Start Sterilization mode.

Sterilization mode:

a) when the robot is installed with the dustbin: Turn off the fan, the robot turns on the UV light when in sterilization mode and halves its speed for mode thorough cleaning. The rotation speed of the main brush and side brushes is also reduced. Ground inspection, wall inspection, lidar, along the wall and other sensors operate normally.

b) when the robot is installed with the electric control water tank: when the water tank is installed, the voice prompts " Start Sterilization mode, please replace with dust bin " to remind the user of the use risk. If the customer ignores it, it can continue. Suction and wiping are switched off, the robot turns on the UV light when in sterilization mode and halves its speed for mode thorough cleaning. The rotation speed of the main brush and side brushes is also reduced. Ground inspection, wall inspection, lidar, along the wall and other sensors operate normally.

c) During startup, charging, recharging, standby, charging, pause, sleep, failure/error, low power (will start recharging), shutdown, autonomous shutdown, etc., UV light and sterilization mode cannot be turned on.

d) Whatever state/mode the machine is in, the UV lamp can be turned on only when the machine is running. When the machine is stopped, the UV light will be turned off.

e) When you pick up the robot, the UVC light also will be shut off immediately to protect you.

f) If you want to end the sterilization mode prematurely, you need to turn on another cleaning mode - Zone Cleaning or Local Turbo Cleaning. This ends the sterilization mode and it is possible to continue in the selected mode.

Instructions

Remote control instruction

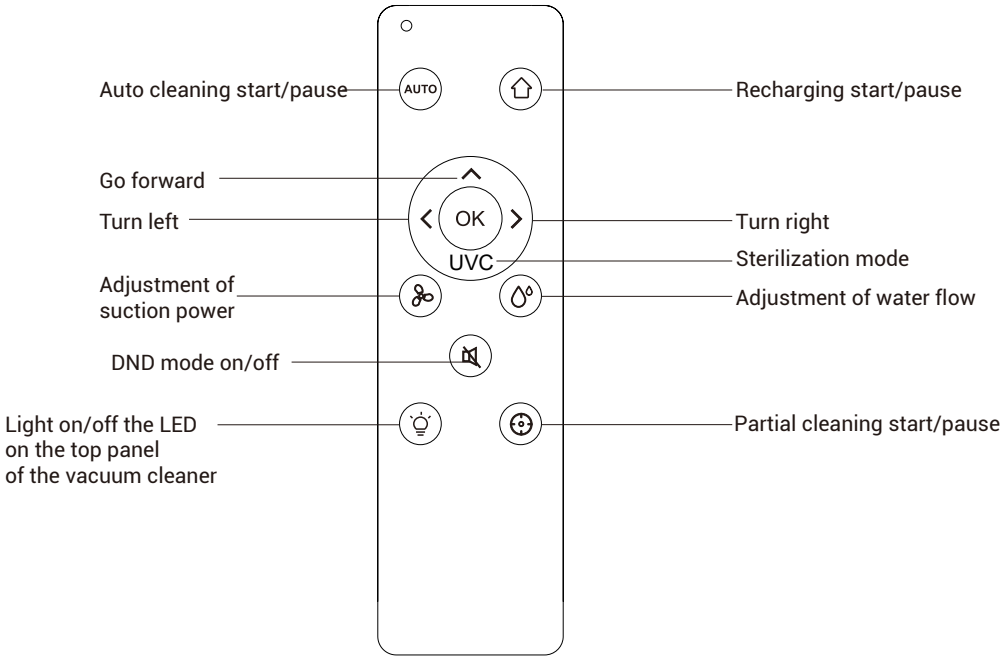

Sterilization mode

1.Press the button on the remote control, the robot start Sterilization mode.

2.Press the button again on the remote control, the robot shut off Sterilization mode.

Daily maintenance

Rolling brush clean it regularly

1.Turn over the machine and press the buckle on the Rolling brush cover to take out the Rolling brush
2.Remove dust outside and inside the Rolling brush using tiny brush and clean the Rolling brush
3.Reassemble the Rolling brush and press the Rolling brush cover tightly to fix the buckle

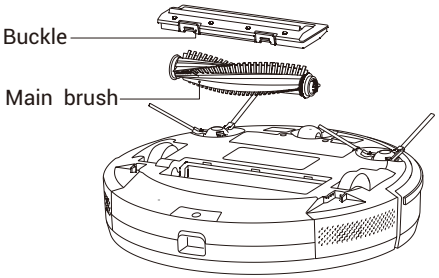

Side brush clean it regularly

1.Turn over the machine and pull out the side brush upwards

2.Remove hair and dirt and reassemble the side brush

3.Make the left side brush (L) and the right side brush (R) correspond to L and R on the bottom casing, press L and R to reinstall them

Note Replace the side brush every 3-6 months so as to ensure the cleaning effect

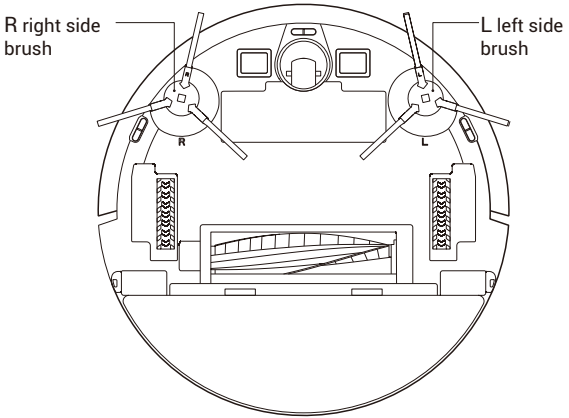

Daily Maintenance

Dust box and filter screen clean it regularly

1.Press the button and pull out the dustbin backward

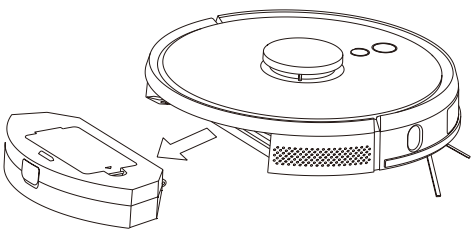

2.Open and clean dustbin

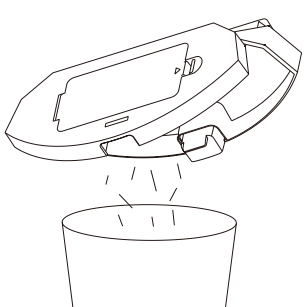

Filter screen cleaning clean it regularly

1.After a long time usage, remove the filter gauze, sponge and HEPA
2.Clean the removed filter gauze ,sponge and HEPA under water
3.Shake off the water drops and dry it naturally, then use it after completely dryied
4.After dry, instll it well in sequence, filter gauze - sponge -HEPA

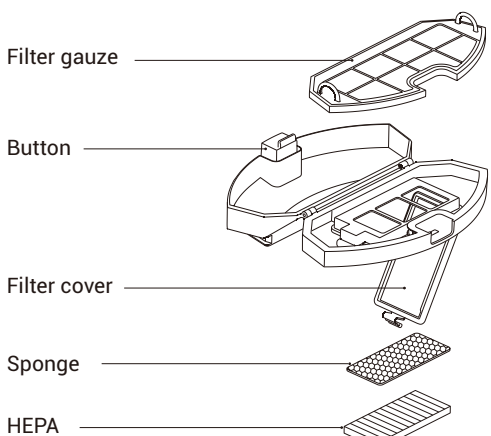

Daily Maintenance

Dust box and filter screen clean it regularly

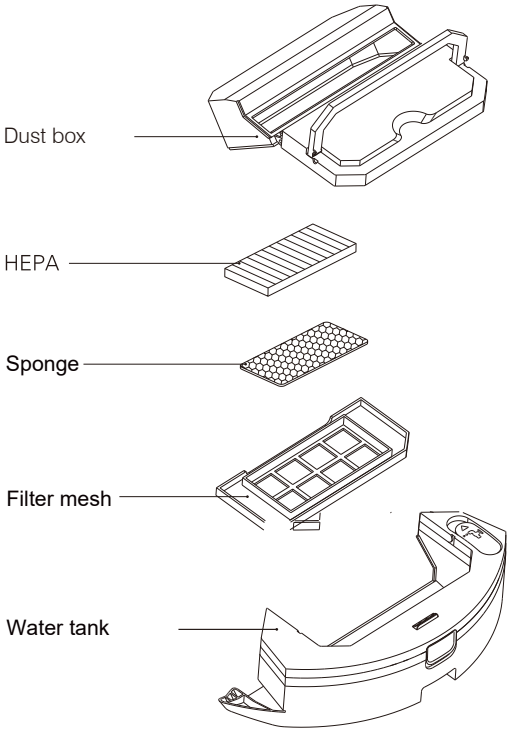

2 in 1 Electric-controlled water tank

Daily Maintenance

Mopping module cleaned it every time

1. Remove the mop, pure out the water from water tank

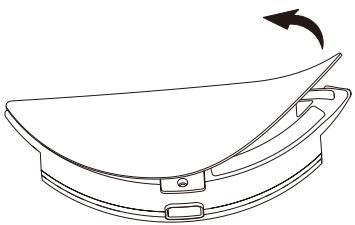

Electric-controlled water tank

2. Clean the mop, dry the water tank and mop

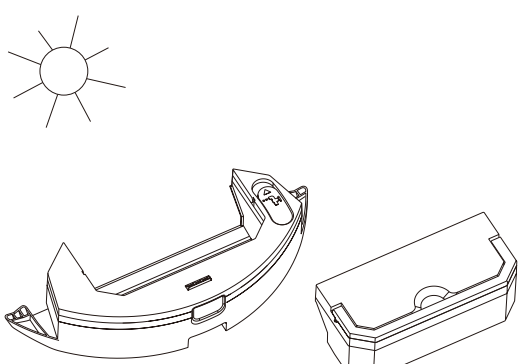

2 in 1 Electric-controlled water tank

Sensor clean it regularly

Clean the sensors by soft mop, include

1.Clean the sensors along the wall on the right
2.Three anti-dropping sensors at the bottom of the host
3.Infrared avoidance sensor in the front of the host
4.Radar avoidance sensor on the top of the host
5.Electric shock protector and charging base shrapnel at the bottom of the host (please cut of the power during cleaning)
6.Signal transmission area of charging base

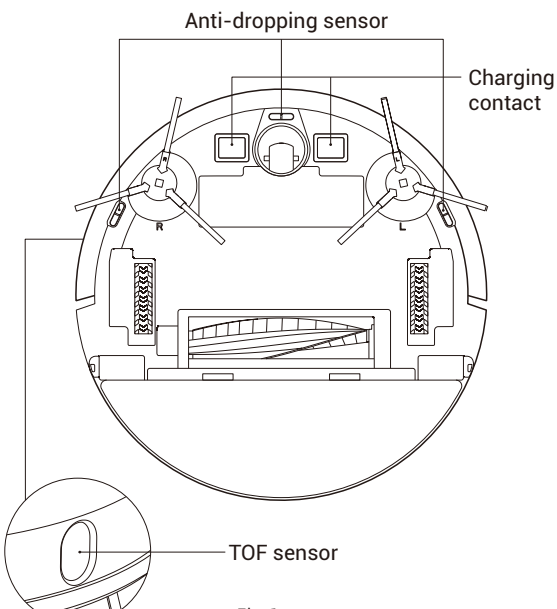

Fig.1

Daily Maintenance

Sensor cleaned monthly

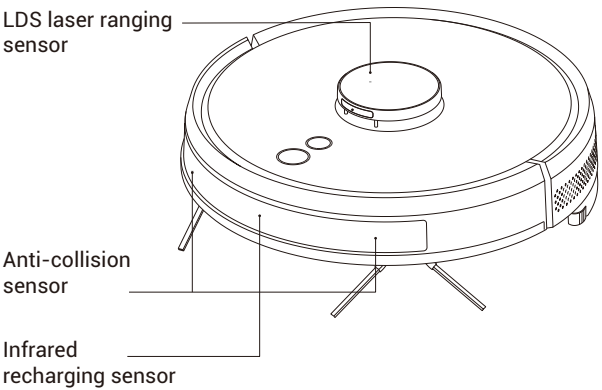

Fig.2

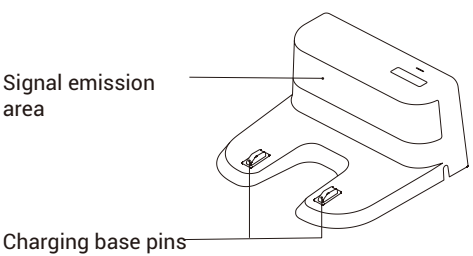

Fig.3

Battery

- The host is furnished with high-performance lithium-ion batteries. To maintain battery performance, please keep the host charged in daily use
- If the machine is left unused long, please shut down and keep it properly. Charge it at least every 3 months to avoid damaging batteries due to excessive discharge

Firmware upgrade

Upgrade firmware using mobile APP. If new firmware is detected, upgrade it according to prompt. The battery level should be ≥50% during firmware upgrade, so the machine should be placed on the charging base

System reset

Take down the dust box, open the rubber plug and press Reset key (refer to page 3).

Salente Robot
Connection Wizard

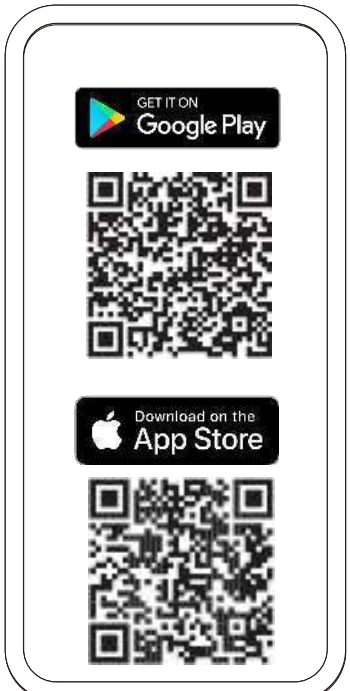

1. Download the Salente Robot app from Google Play or the Apple store. You can easily access the application by scanning the QR code, see above. Alternatively, you can search for "Salente Robot".

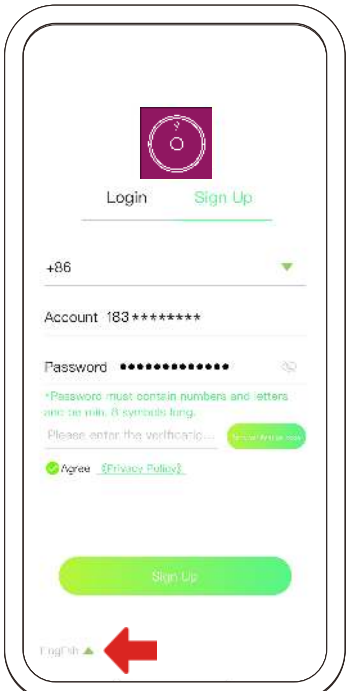

2. New users must register and create a new account. You can also change the language here.

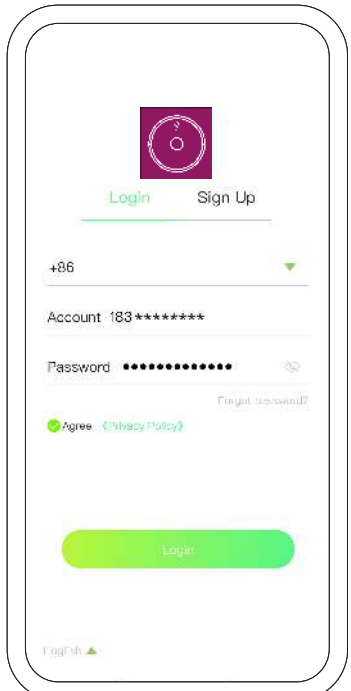

3. Users who already have an account can sign in to Salente Robot.

Salente Robot
Connection Wizard

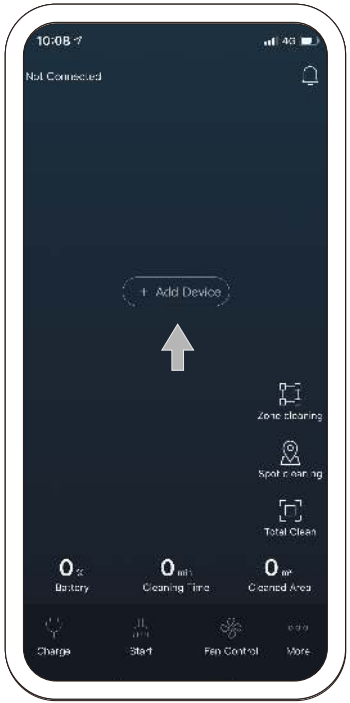

4. Press “+” to add the device.

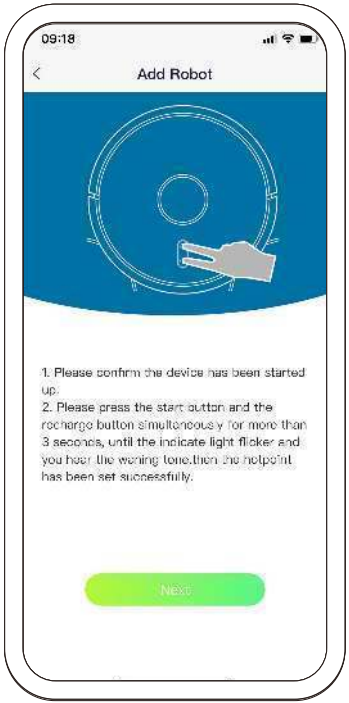

5. Follow the instructions to reset the wifi device and select Next

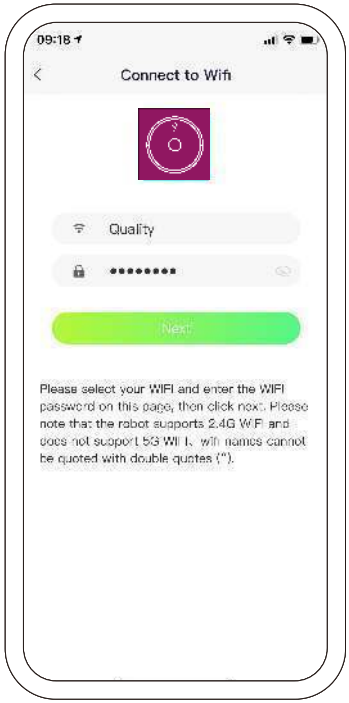

6. Enter your Wi-Fi password and press Next.

Salente Robot
Connection Wizard

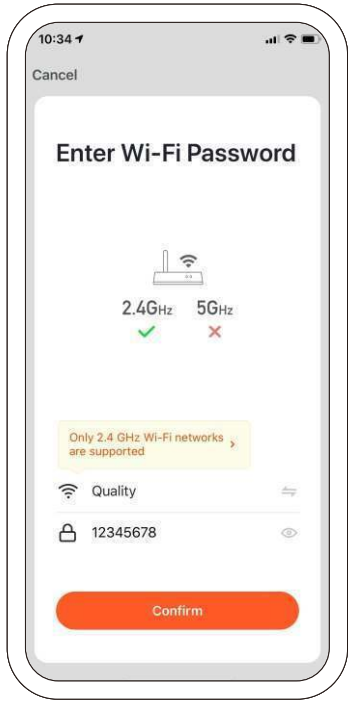

7-A. For Android phone. Connect to "Robot-xxx" and then confirm the next step.

7-B. For iPhone (iOS). Press the "WIFI Settings" button Go to your phone's network settings and connect to the "Robot-xxx". connection, then go back to the app to complete the setup.

Salente Robot
Connection Wizard

8. Connecting ...

9. Connected. Application desktop

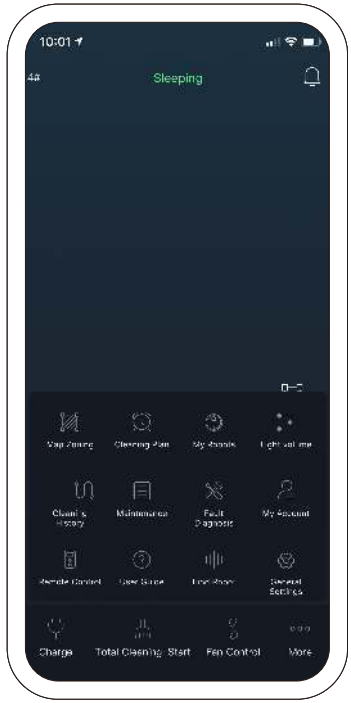

10. Desktop options

Salente Robot

App operation manual

HOME

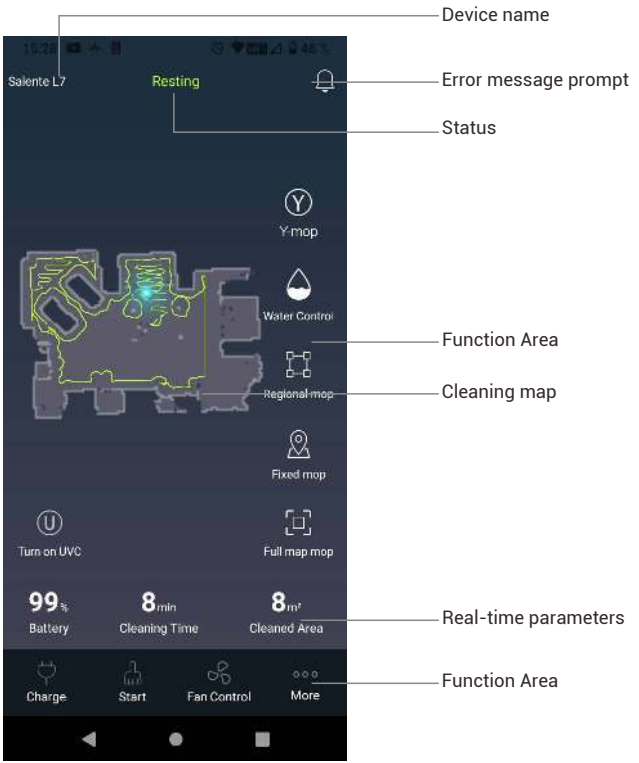

Device name: name of the currently connected cleaning robot.

Error message prompt: The cleaning robot is shown in the error message prompt failures in the process.

Status: current operation status of the cleaning robot.

Y-mop: switch on floor mop mode

Water volume: when mopping, electric controlled the water output.

Zone cleaning: clean the designated area on the map.

Spot cleaning: focused cleaning at designated locations on the map.

Total cleaning: clean the whole house.

Cleaning map: real time mapping.

UVC: switch on UVC lamp or sterilization mode

Real-time parameters: display the Battery, cleaning time, cleaned area.

Charge: Press this button, the cleaning robot will return to the charging base and enter the charging mode.

Continue / Pause: Press this button, the cleaning robot will continue or pause the cleaning task.

Fan control: Control the suction when robot working.(3-level suctions)

More: In more option, can map the equipment, schedule cleaning, view the information of the cleaning robot, cleaning records, consumable consumption, adjust the light festival and volume, troubleshooting, account information, use the remote control, product description, call the robot.

HOME

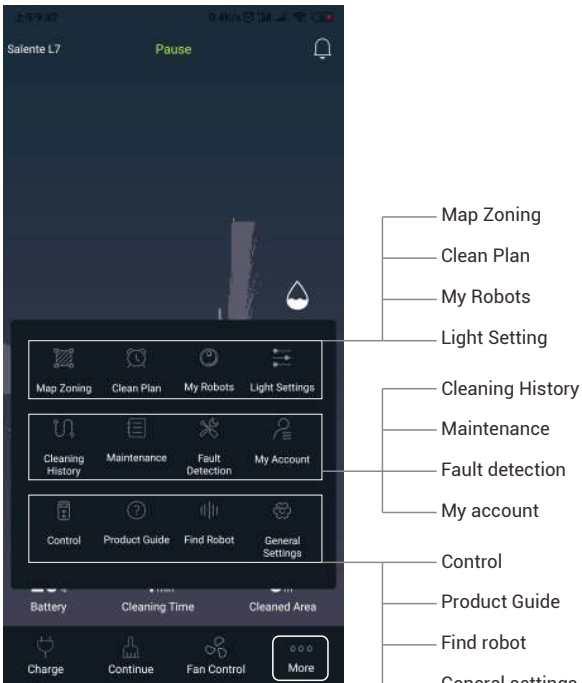

Map Zoning: press this button, choose to create a new area, select the area name, move Rectangle frame to any position, select the area status: Normal cleaning (cleaning once), Double cleaning (cleaning twice), Prohibited cleaning (set restricted area), and then click Save.
The area setting is successful. Then you can click the area to clean in the main circle, select the set area, press the start button, and the robot will clean the set area.

Clean Plan: set the scheduled cleaning time. The robot will start cleaning automatically, you can also set the Do Not Disturb model.then No voice will be played during the Do Not Disturb period.

My Robots: Manage the robot, can change the name of the robot cleaner, share the cleaning robot to other users, and switch the control among the connected cleaning robots. You can also click "+" to connect a new robot cleaner.

Light Setting: turn the light on or off (replace the light with the LED on the top panel of the vacuum cleaner) and adjust message volume

Cleaning History: View the cleaning history , and use the map of clean history; if Select to delete map, will delete the current map data including zone and forbidden areas, etc., the robot needs to rescan the map.

Maintenance: Check current consumables usage; need to reset after replacing new consumables

Fault detection: Check whether the current status of the robot components is normal.

My account: view the current account information, modify the password, log out of the account, log out of the account, etc.

Control: manually control the robot cleaner, start the cleaning at the designated position cleaning

Product Guide: information of the components for the cleaning robot, troubleshooting, daily maintenance and other information.

Find robot: Press this button to sweep the robot to trigger a voice broadcast.

General settings: You can learn about APP updates, network information of sweeping robots, change languages, switch voices.

Zone Cleaning

Before setting the zones, you must first let the vacuum cleaner run through the entire space and create a complete map.

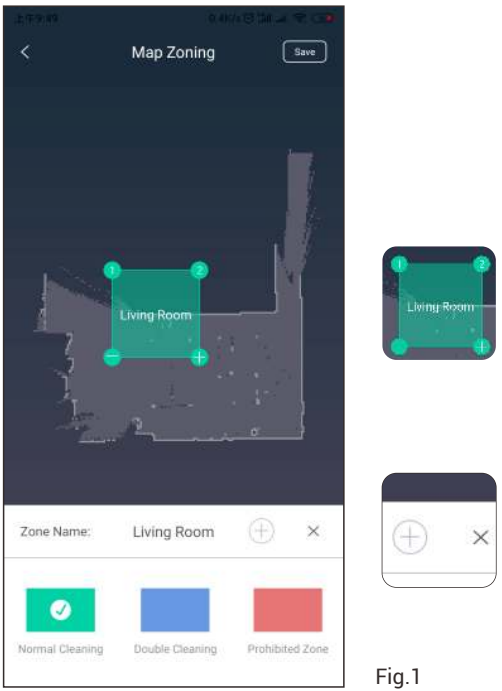

Fig.1

Fig.2

1.Select “Map Zoning”, create a new area and name it, move the rectangle frame to any position(fig.1), select the area cleaning type, Normal cleaning (cleaning once), Double cleaning (cleaning twice), Prohibitedcleaning (set restricted area), and then click Save, the area setting is successful.

2.Click the “zone cleaning” at main interface, select the set area, press the start button, and the robot will clean the set area, after finished it, the robot will back to recharging.

Click the selected rectangle frame to current area, click the “+” to add nodes, click”-” to delete nodes . Click “⊕” to add new area, click ”×” to delete area.

Spot Cleaning

Fig.3

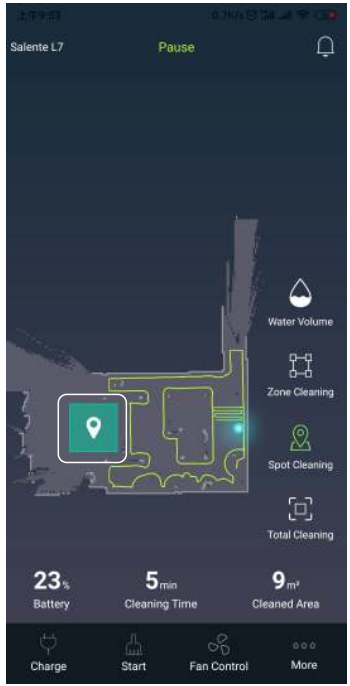

Fig.4

Select “spot cleaning” function (fig.3), drag the icon to place need to clean, then display like fig.4. Press Start, then robot will reach this position as centre and start cleaning twice within the range 1.5m*1.5m.

Voice control – pairing with Google Home

Salente L7 can be paired via Google Home and controlled by voice commands.

- After installing the Salente Android app and putting Salente L7 into operation in this app, turn on your Google Home device and pair it in the Google Home app.
- Click on the “+” symbol in the upper right corner of the Google Home app and select the first “Device setting” option. In this “Setting”, click on the “Works with Google” option. You will see a list of brands which can be connected to Google Home.
- Search for “Tuya” and the “Tuya Smart” service will be found. Click on it. You will see a login to the Tuya server. (This is a service that allows you to communicate with Google Home.)
- Enter the same login you have created for the Salente app, i.e. phone number and password, and click on “Link Now”.
- Then click on “Authorize”. Select “Salente 7” from the list and click on “Add to room”.
- Then select your household and click on “Next”, then “My room” and “Next” and Salente-L7 is paired with the Google Home app.
- Now you can use voice commands to control the robotic vacuum cleaner.

There are 4 voice commands:
1. Ok Google, turn on L7. (You need to speak English, i.e. even when spelling L7.)
2. Ok Google, turn off L7. (You need to speak English, i.e. even when spelling L7.)
3. Ok Google, L7 go home. (You need to speak English, i.e. even when spelling L7.)
4. Ok Google, where is L7. (You need to speak English, i.e. even when spelling L7.)

Common Problems

Problem	Solution
The robot cannot be started	• In case of a low battery level, please place the robot on the charging base and align it at the electrode plate, the machine will be started automatically (if the robot is completely powered off, it can be started automatically after charged for a while) • If the environment temperature is lower than 0 or higher than 50 , please use it at a temperature of 0-40
The robot cannot be charged	• Please move the robot away, check whether the indicator light of the charging base lights on and confirm both ends of the power adapter of the charging base are connected well • In case of poor contact, please clear the charging base shrapnel and the charging contact on the robot or push the side brush aside
The robot cannot be recharged	The robot is too far away from the charging base, please put the robot near the charging base and make another try
Abnormal behavior	Shut down and restart the robot
Abnormal noise in use	Main brush, side brush or wheel may be twined by foreign matters, please shut down the robot and remove foreign matters
Cleaning ability declines or dust falls out	• The dust box is full, please clear it • The filter screen is blocked, please clear or replace it • The main brush is twined by foreign matters, please clear it
WiFi cannot be connected	• WiFi signal is bad, please ensure is covered by WiFi signal • WiFi is connected abnormally, please reset WiFi, download the latest APP and try to reconnect it • Password is inputted incorrectly • The router is available for 5G frequency band, the cleaning robot is available for 2.4G frequency band only
Fixed-time cleaning fails	In case of a low battery level, fixed-time cleaning can be started only when the battery level is no less than 30%
Whether the robot consumes power if it is always placed on the charging base	The robot consumes a little power if it is always placed on the charging base and it enables the best performance of battery
Whether the robot needs to be charged for 16h for the first three times	The lithium battery can be used immediately after being charged and has no memory effect

Troubleshooting

Prompt Tone	Solution
Error 1: Oh dear! I cannot find the dust collector	Cleaning is triggered when the dust box is take out
Error 2: Please check if the radar on top has been covered or blocked	The top radar is covered or placed in an open area (there is not obstacle within an area of 6×6m2)
Error 3: Please place me in a new location and try again	Pick the robot up or hang it in the air
Error 4: Please scrub the cliff sensor, and restart me from a new location	The cliff sensor is covered or placed at height
Error 5: Please scrub the front sensor, and restart me from a new location	The infrared avoidance sensor is dirty or covered
Error 6: Please scrub the right-hand sensor, and restart me from a new location	The wall sensor is dirty or covered
Error 7: Please scrub the radar housing on top, and restart me from a new location	The radar avoidance sensor is dirty or covered
Error 8: Please check if the bumper has been blocked in some way	The edge or collision sensor is stuck
Error 9: Master, please clean the dust container and filter	The dust box is full or the filter screen needs to be replaced
Error 10: Dust container has been removed, please clean the container and filter	After error 9 is issued, user takes out the duct chamber and error 10 is triggered
Error 11: I'm stuck, please help me!	The robot is stuck

Troubleshooting

Prompt Tone	Solution
Error 12: Please place me correctly!	The robot is tilt
Error 13: Please check if my wheels have become blocked somewhere	The driving wheel is stuck or twined
Error 14: Please check if the main brush has become stuck	The main brush is twined or stuck
Error 15: Please check if the side brushes have become stuck	The side brush is twined or stuck
Error 16: What's going on? Where is the docking station?	The charging base cannot out found or is not plugged in
Error 17: Oh dear! Program error, please restart me	Abnormalities are caused by unknown breakdown, restart the robot
Error 18: Error encountered initiating shutdown	The robot reminds the user and shuts down automatically or is recharged
Error 19: Low battery, please recharge	When the battery level is too low and the robot is not on the charging base, cleaning is triggered (the battery level is lower than 10%)
Error 20: To shut me down, please place me away from the docking station	The robot shuts down when charged on the charging base

Safety Information

Usage Limitations

- The product is used for floor cleaning in a home environment only and cannot be used for outdoor (such as open terrace), non-ground (such as sofa) and commercial or industrial environment
- Please do not use the product in midair areas (such as penthouse, open terrace and furniture top) without protective fence
- Please do not use the product at a temperature of above 40 or below 0 or when there are liquids and sticky substances on the ground
- Please hang cables on the ground before use so as to avoid being dragged by the host
- Please clear fragile objects and impurities (such as vase and plastic bag, etc.) on the ground so as to avoid damaging valuables when the host is stuck or impacted slightly
- People with physical, spiritual or perceptual disorder (including children) are not allowed to use or operate the product
- Children cannot use the product as a toy. Please keep children and pets away when the host is working
- Please keep main brush and other cleaning tools out of reach of children
- Please do not place objects (including children and pets) on a stationary or moving machine.
- Please keep hair, fingers and other parts of human body or pets away from the suction inlet when the machine is works
- Please do not use the product to sweep burning objects (such as burning cigarette end)
- Please do not use the product to clean long-haired carpet (some dark carpets may not be cleaned normally)
- Please prevent the host from suctioning hard or sharp objects (such as waste decorative materials, glass and iron nail, etc.)
- Please do not move the machine by holding the protective cover of laser distance sensor and collision bumper
- Please clean or maintain the host and the charging base under shutdown or power-off state
- Please do not wipe any part of the product using wet cloth or any liquid
- Please use the product according to User Manual. User should be responsible for any damages and injuries caused by improper use
- Please do not use mopping function for carpet and furniture top
- Please be sure to remove the water tank when the machine is being charged·

Safety Information

Battery and Charging

- Please do not use battery, charging base or charger provided by any third parties
- Please do not dismantle, report or refit battery or charging base arbitrarily
- Please keep the charging base away from heat source (such as heating plate)
- Please do not wipe or clean the charging base shrapnel using wet cloth or wet hand
- Please do not abandon used batteries arbitrarily. Used batteries should be disposed of by professional recycling agency
- If power line is damaged or broken, please disuse it immediately and replace it through official channels
- Please ensure the host shuts down during transportation and the product should be transported in original packaging
- If the machine is left unused long, it should be fully charged and then placed in a cool and dry place. Charge the machine at least every 3 months so as to avoid damaging batteries due to excessive discharge

Laser Safety Information

- Laser distance sensor of the product complies with the standard for class1 laser products of IEC60825 and does not produce dangerous laser radiation

Safety Information

Power adapter specifications	
Name, address and business registration number of the manufacturer of the equipment:	Naxya Limited, No. 5, 17/F, Strand 50, 50 Bonham Strand, Sheung,Wan, Hong Kong,1891486
Device model number	RTX-L7
Name or trademark, trade registration number and address of the AC adapter manufacturer	Shenzhen Nalin Elec Tech Company Limited 2/f West & 3/f Bldg Zhouteng Industry Garden, Shanglilang Community Nanwan Longgang, 518112 Shenzhen Guangdong, China
AC adapter model identification mark	NLD100240W1U4
Power voltage	100 - 240 V~
AC input frequency	50/60 Hz
Output voltage	24V
Output current	1A
Output power	11,4 W
Average activity in active mode	86,70%
Efficiency at low loads	79,1%
No-load power consumption	0,07W

Disposal: The symbol of crossed out container on the product, in the literature or on the wrapping means that in the European Union all the electric and electronic products, batteries and accumulators must be placed into the separate salvage after finishing their lifetime. Do not throw these products into the unsorted municipal waste

DECLARATION OF CONFORMITY

Hereby, the company Abacus Electric, s.r.o. declares that the SALENTE L7 is in compliance with the requirements of the standards and regulations, relevant for the given type of device.
Find the complete text of Declaration of Conformity at http://ftp.salente.cz/ce/

Dovozce / Dovozca / Importer / Importőr
Abacus Electric, s.r.o.
Planá 2, 370 01, Czech Republic

Výrobce / Výrobca / Manufacturer / Gyártó
Naxya Limited
No.5, 17/F, Strand 50, 50 Bonham Strand, Sheung Wan, Hong Kong
Made in China

Copyright © Abacus Electric, s.r.o.
www.salente.eu

All rights reserved.
Design and specification may be changed without prior notice.