Kodak S2000f/S3000 Series Scanners

KODAK S2085f Scanner
KODAK S3060 Scanner
KODAK S3060f Scanner
KODAK S3100 Scanner
KODAK S3100f Scanner
KODAK S3120 Scanner

User's Guide

A-61916

3rd Party Licenses

This software is based in part on the work of the Independent JPEG Group

Copyright (C)2009-2013 D. R. Commander. All Rights Reserved.

Redistribution and use in source and binary forms, with or without modification, are permitted provided that the following conditions are met:

- Redistributions of source code must retain the above copyright notice, this list of conditions and the following disclaimer.
- Redistributions in binary form must reproduce the above copyright notice, this list of conditions and the following disclaimer in the documentation and/or other materials provided with the distribution.
- Neither the name of the libjpeg-turbo Project nor the names of its contributors may be used to endorse or promote products derived from this software without specific prior written permission.

THIS SOFTWARE IS PROVIDED BY THE COPYRIGHT HOLDERS AND CONTRIBUTORS "AS IS", AND ANY EXPRESS OR IMPLIED WARRANTIES, INCLUDING, BUT NOT LIMITED TO, THE IMPLIED WARRANTIES OF MERCHANTABILITY AND FITNESS FOR A PARTICULAR PURPOSE ARE DISCLAIMED. IN NO EVENT SHALL THE COPYRIGHT HOLDERS OR CONTRIBUTORS BE LIABLE FOR ANY DIRECT, INDIRECT, INCIDENTAL, SPECIAL, EXEMPLARY, OR CONSEQUENTIAL DAMAGES (INCLUDING, BUT NOT LIMITED TO, PROCUREMENT OF SUBSTITUTE GOODS OR SERVICES; LOSS OF USE, DATA, OR PROFITS; OR BUSINESS INTERRUPTION) HOWEVER CAUSED AND ON ANY THEORY OF LIABILITY, WHETHER IN CONTRACT, STRICT LIABILITY, OR TORT (INCLUDING NEGLIGENCE OR OTHERWISE) ARISING IN ANY WAY OUT OF THE USE OF THIS SOFTWARE, EVEN IF ADVISED OF THE POSSIBILITY OF SUCH DAMAGE.

Contents

Contents i

Safety v
User Precautions v
Warning labels vi
Acoustic emission vi

1 Overview 1
Illustrations in this guide 1
Supporting documentation 1
Accessories 2
What's in the box 2
Scanner components 3
Front view 3
Inside view 6
Rear view 7
Optional Printer Accessory: Printer access view 8

2 Installation/First Scan 9
Installation 9
Unboxing the scanner 9
Setting up your scanner 10
Configure network settings 11
Install ferrite core 12
Install driver software 13
Verify scanner's firmware 14
Update scanner's firmware 15
Computer with driver software installed 15
Web Browser 15
Available Alaris Scanning Software 16
Smart Touch 16
Capture Pro LE 16
Power saver mode and turning the scanner off 18

3 Scanner Adjustments 19
Adjusting the input tray 19
Adjusting the output tray 20
Attaching the exit deflectors 23
Flatbed scanning (S2085f, S3060f, S3100f Scanners only) 24
Using the rear document exit 26
Using the Scanner Touch Screen 27
Status area 27
Touch screen buttons 27
Settings screen 29
Information 29
Maintenance 29
Network 30
Diagnostics 31
Easy Setup 33
Power 34
Language 34

Elevator 35
Feed adjustment 35
Speed 36
Sharing 36
Admin Access 37
Reset 37
Ready States 38
Ready with users 38
Ready with profiles 38
Scanning in progress 39
Misfeed Detection Control 39
Scanning paused 40
Document Handling 41
Elevator and paper path controls 42

4 Document Printing 43
Using the *Kodak* Printer Accessory 43
Printer specifications 44
Installing/replacing the ink cartridge 45
Changing print positions 47
Problem solving 48

5 Maintenance 49
Chapter overview 49
Cleaning tools and materials 49
Opening the scanner cover 50
Cleaning procedures 51
Vacuuming the output tray, input elevator and transport area 51
..... 52
Cleaning the rollers 52
Cleaning the separation roller tires 52
Cleaning the feed module tires 53
Cleaning the background strip(s) 53
Cleaning the CIS Imager 54
Cleaning the flatbed glass (S2085f/S3060f/S3100f Scanners only) 54
Running a transport cleaning sheet 55
Final cleaning steps 55
Replacement procedures 56
Replacing the feed module or feed module tires 56
Replacing the separation roller 58
Replacing the separation roller tires 58
Replacing the pre-separation pad 59
Replacing the flatbed background
(S2085f/S3060f/S3100f Scanners only) 60
Supplies and consumables 60

6 Troubleshooting 61
Scanner error indicators 61
Problem solving 61
Scanner exception handling 61
Self help for problems 62
Upgrading software 66
Contacting Service 66

Appendix A Regulatory Information 67
Environmental information 67
European Union 67
EMC statements 70

Appendix B Warranty - US and Canada only 71

Safety

User Precautions

- Place the scanner on a sturdy, level work surface capable of supporting 20.4 kg (45 lbs) and leave adequate clearance on all sides of the scanner.
- When relocating the scanner, it is recommended that two people lift the scanner and use safe lifting techniques.
- Do not install the scanner in a location subject to dust, humidity or steam. This may cause electrical shock or a fire. Only use the scanner indoors in a dry location.
- Make sure the electrical power outlet is located within 1.52 meters (5 feet) of the scanner and is easily accessible.
- When disconnecting equipment from the electric socket, be sure to grasp the plug, not the cord.
- Be sure the power cord is securely plugged into the wall outlet. Failure to do so may cause electrical shock or fire.
- Do not damage, knot, cut or modify the power cord or use a damaged power cord. This may cause electrical shock or fire.
- The scanner requires a dedicated and properly grounded power outlet. Do not use an extension cord or power strip with the scanner.
- Leave sufficient space around the power outlet so it can be easily unplugged in case of an emergency.
- Do not disassemble, service or modify the scanner except as explained in the User's Guide.
- Do not move the scanner with the power cord and interface cable attached. This may cause damage to the cord/cable. Remove the power cord from the wall outlet before moving or relocating the scanner.
- Follow the Kodak Alaris recommended cleaning procedures. Do not use air, liquid or gas spray cleaners. These cleaners displace dust, dirt and debris to other locations within the scanner, which may cause the scanner to malfunction.
- Material Safety Data Sheets (MSDS) for chemical products are available on the Kodak Alaris website at: www.alarisworld.com/go/ehs. When accessing the MSDSs from the website, you will be required to provide the catalog number of the consumable you want the Material Safety Data Sheet for. See the section entitled, "Supplies and consumables" later in this guide for supplies and catalog numbers.
- This device is not intended for use in the direct field of view at visual display workplaces. To avoid incommoding reflexions at visual display workplaces this device must not be placed in the direct field of view.

Users and their employers need to observe the common sense precautions applicable to the operation of any machinery. These include, but are not limited to, the following:

- Do not wear loose clothing, unbuttoned sleeves, etc.
- Do not wear loose jewelry, bracelets, bulky rings, long necklaces, etc.
- Hair length should be kept short, using a hair net if needed, or tying long hair up in a bundle.
- Remove all other loose objects from the area that could be drawn into the machine.
- Take sufficient breaks to maintain mental alertness.
- Use only the recommended cleaning supplies.
- Do not use canned/compressed air.

Supervisors should review their employee practices and make compliance with these precautions a part of the job description for operation of the scanner or any mechanical device.

Battery Information

This product contains a Lithium button cell battery. This battery can only be removed or replaced by a qualified Service Engineer.

CAUTION:

- Risk of explosion if the battery is replaced by an incorrect type.
- Dispose of used batteries according to the instructions.

Warning labels

CAUTION: Moving parts, avoid contact.

Acoustic emission

Maschinenlärminformationsverordnung – 3, GSGV
Der arbeitsplatzbezogene Emissionswert beträgt <70 dB(A).

[Machine Noise Information Ordinance — 3, GSGV
The operator-position noise emission value is <70 dB(A).]

1 Overview

The *Kodak* S2000f/S3000 Series Scanners are desktop duplex color scanners. These models are available:

- *Kodak* S2085f Scanner scans up to 85 pages per minute, black and white A4 documents at 300 dpi in portrait orientation. The S2085f Scanner also includes a built-in flatbed which allows you to scan exception documents up to A4 (21 x 29.7 cm) or 8 ½ x 11-inch (21.6 cm x 27.94 cm).
- *Kodak* S3060 Scanner scans up to 60 pages per minute, black and white lettersize documents at 300 dpi in landscape orientation.
- *Kodak* S3060f Scanner scans up to 60 pages per minute, black and white lettersize documents at 300 dpi in landscape orientation. The S3060f Scanner also includes a built-in flatbed which allows you to scan exception documents up to A4 (21 x 29.7 cm) or 8 ½ x 11-inch (21.6 cm x 27.94 cm).
- *Kodak* S3100 Scanner scans up to 100 pages per minute, black and white lettersize documents at 300 dpi in landscape orientation.
- *Kodak* S3100f Scanner scans up to 100 pages per minute, black and white lettersize documents at 300 dpi in landscape orientation. The S3100f Scanner also includes a built-in flatbed which allows you to scan exception documents up to A4 (21 x 29.7 cm) or 8 ½ x 11-inch (21.6 cm x 27.94 cm).
- *Kodak* S3120 Scanner scans up to 120 pages per minute, black and white lettersize documents at 300 dpi in landscape orientation.

Illustrations in this guide

This User's Guide provides information and procedures for using and maintaining the *Kodak* S2000f/S3000 Series Scanners. There are multiple models in this series; your model may look slightly different than any specific illustration. The information in this guide refers to all S2000f/S3000 scanner models unless otherwise noted.

Supporting documentation

In addition to this User's Guide, the following documentation is also available:

- **Installation Guide** — provides a step-by-step procedure for installing the scanner.
- **Reference Guide** — provides easy visual steps for cleaning your scanner. Keep this guide close to the scanner so you can use it as an easy reference.

Website: www.AlarisWorld.com/go/IM

Accessories

***Kodak* Printer Accessory for the S2000f/S3000 SeriesScanners** — the Printer Accessory provides an effective way to apply information to the rear side of the scanned document. It operates at full scanner speed. The printer can add a date, time, document sequential counter and custom messages. All printer controls and functions are accessible through the TWAIN Datasource or ISIS Driver. (CAT No.1324391 - Printer Accssry i2900/S2000f/i3000/S3000)

***Kodak* A3 Flatbed Accessory** — the *Kodak* A3 Flatbed adds scanning capability for exception-size documents up to A3 (29.7 x 42 cm) or 11 x 17-inch (27.94 x 43.2 cm) to your *Kodak* S2085f/S3060/S3060f/S3100/S3100f/S3120 Scanner. (CAT No. 1894351)

Document Extender — allows you to scan documents longer than 17 inches (43.2 cm) and up to 36 inches (91.44 cm). (CAT No. pending)

Rear Output Tray Accessory - catches documents that exit through the rear of the scanner. (CAT No. 1703594)

What's in the box

Before you begin open the box and check the contents:

- *Kodak* S2085f, S3060, S3060f, S3100, S3100f, or S3120 Scanner
- USB 3.0 cable
- AC power cord bundle (with 60W power supply)
- Also included:
  - Installation CD
  - Application CDs
  - Printed User's Guide, English
  - Printed Reference Guide
  - Printed Installation Guide
  - Sample Cleaning Kit
  - Miscellaneous flyers

Scanner components

Front view

The following illustration is of the *Kodak* S3060f Scanner. The *Kodak* S2085f, S3060f and S3100f are flatbed models. If you have any other *Kodak* S2000f/ S3000 Series Scanner, you do not have a flatbed. All components are on all scanner models unless otherwise noted.

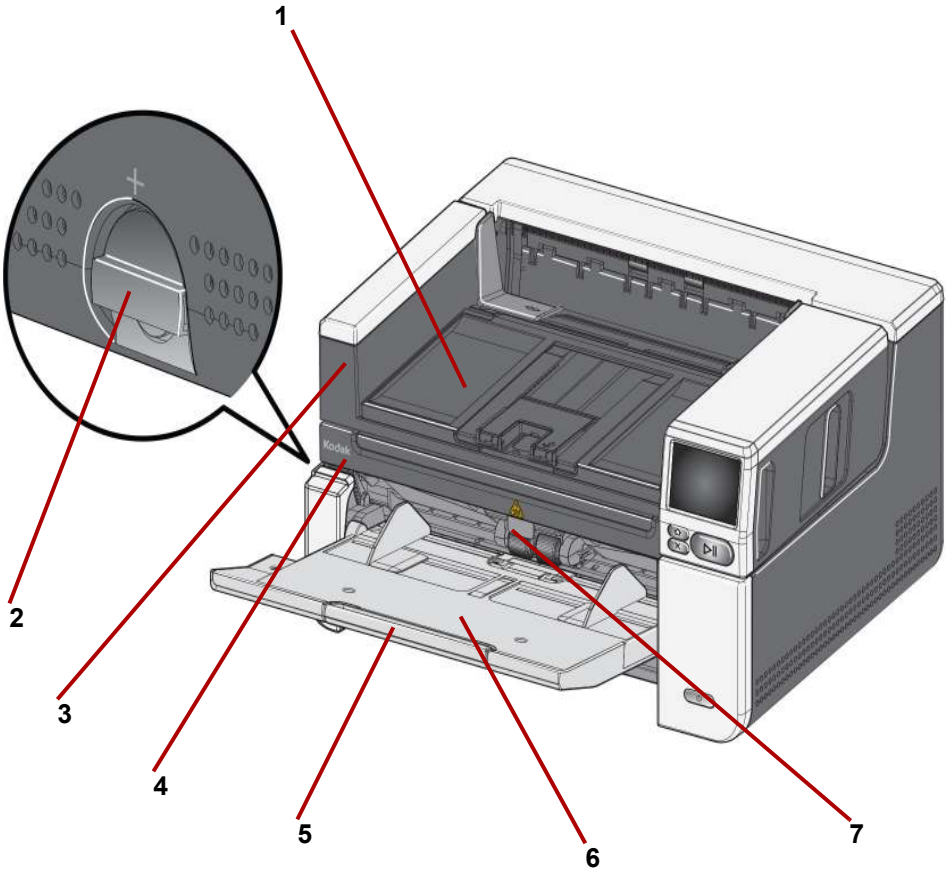

1 **Output tray** — collects the scanned documents.

2 **Gap release** — turn the dial vertically to open the space between the feed module and separation module for documents that require special handling.

3 **Grasp here to open flatbed** *(only on the Kodak S2085f, S3060f, and S3100f Scanners)* — provides access to the flatbed, which allows you to scan exception documents, books, magazines, file folders, etc.

4 **Flatbed** — *only on the Kodak S2085f, S3060f, and S3100f Scanners)* — built-in flatbed which allows you to scan exception-size documents up to A4 (21 x 29.7 cm) or 8 ½ x 11-inch (21.6 cm x 27.94 cm).

5 **Input tray extender** — pull this extender out to accommodate documents longer than 11 inches (27.94 cm) and up to 17 inches (43.2).

6 **Input tray (elevator)**— holds up to 300 documents (20 lb. / 80 g/m^2) for scanning. When documents are loaded and ready to scan, the elevator will adjust to the correct height for feeding. After scanning is completed, the elevator will return to the lowest position. The input tray can be folded up when it is not in use.

7 **Feeder adjustment tab** - pull this tab out to increase pressure on feed rollers for hard-to-feed documents.

.

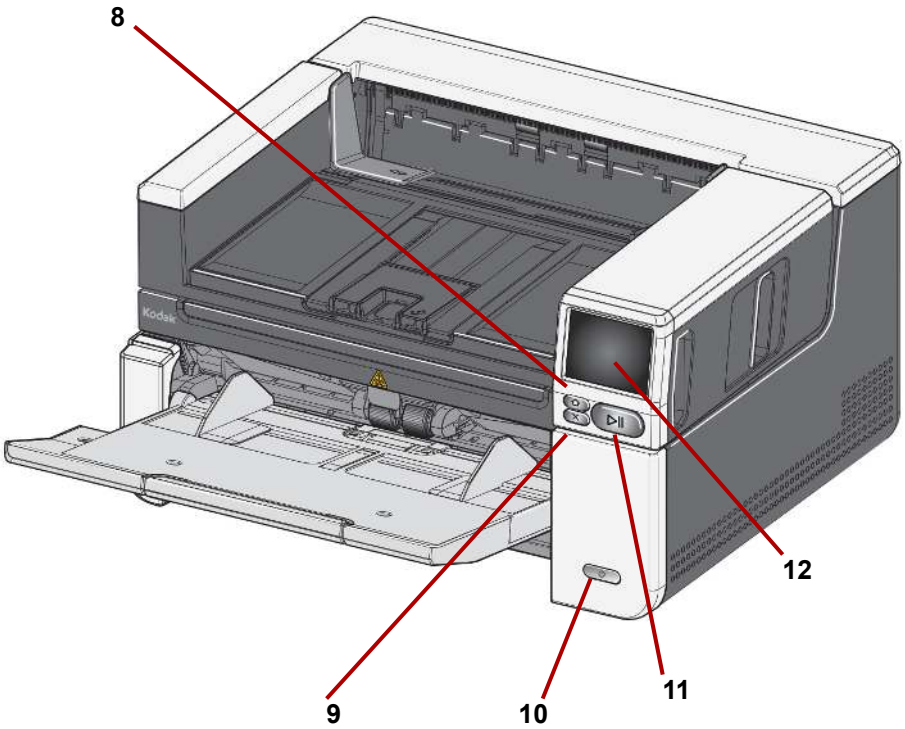

8 **Home button -** press to return to the scanner home display. For Alaris scanning applications, you will see the list of scanning setups. For applications that must initiate scanning at the PC, you will see the ready screen.

9 **X button** — press to pause or end scanning jobs, clear some event notifications, or close some screens.

10 **Power button** — press and release the power button to turn the scanner on. If the scanner is already powered on, hold the power button for several seconds and the scanner will turn off.

11 **Pause/Resume button** — if scanning is in progress, press to pause scanning; if the scanner has been paused, press to resume scanning.

12 **Scanner display screen** — touch screen with color graphic display of scanner information and controls. The screen provides access for Kodak Alaris scanning applications that allow you to initiate scanning at the scanner.

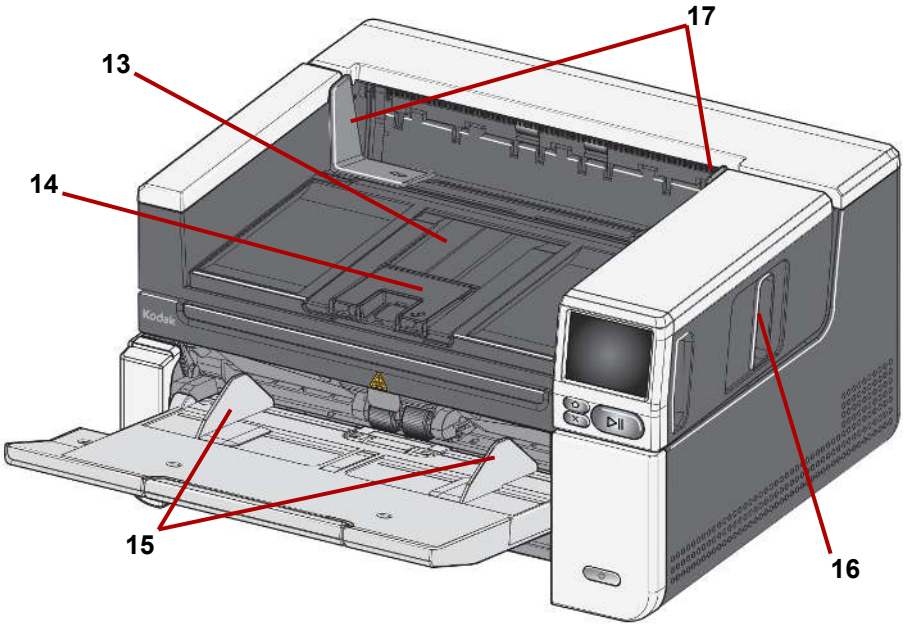

13 **Output tray extension** — can be opened to accommodate documents up to 17 inches / 43.2 cm.

14 **Document stop** - raise the document stop for improved document stacking.

15 **Input tray (elevator) side guides** - slide these guides in and out to accommodate the size of the documents that you are scanning.

16 **Scanner cover release latch** — pull the release latch to open the scanner cover.

17 **Output tray side guides** - slide these guides in and out to accommodate the size of the documents that have been scanned.

Inside view

When you pull the scanner cover release latch forward, the following internal components are visible.

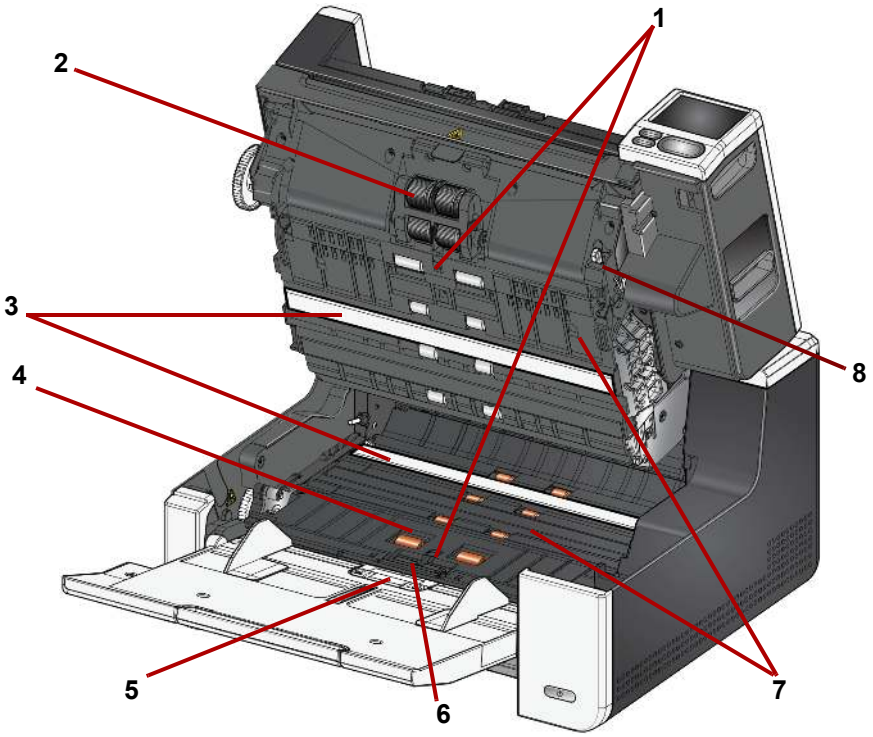

1 **Ultrasonic Sensors** — used to detect multifeeds and document damage. The Kodak Alaris Intelligent Document Protection feature helps protect your documents from being damaged. Refer to the Scanning Setup Guides for more information about this feature.

2 **Feed module** — provides smooth document feeding and separation of various sizes, thicknesses and textures of documents.

3 **CIS Imager (2)** — keep the imagers clean to obtain optimum image quality.

4 **Front Transport Roller / Rollers** — provides smooth transport of documents through the scanner.

5 **Paper Present sensor** — detects the presence of documents in the input tray.

6 **Separation module and pre-separation pad** — provides smooth document feeding and separation of various sizes, thicknesses and textures of documents.

7 **Transport** - path where documents are transported through the CIS Imagers to the output tray.

8 **Feed module release lever** — push this lever to release the feed module from its position when replacing the feed module or feed module tires.

Rear view

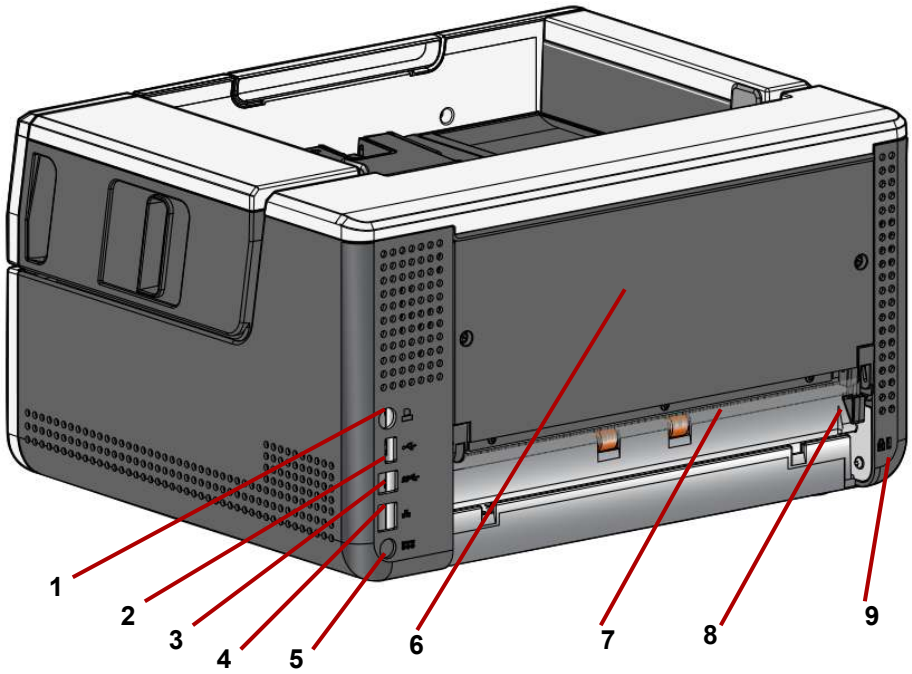

1 **Printer port** — allows connection from the *Kodak* Printer Accessory to the scanner.

2 **USB port, type A** — connects the scanner to an accessory flatbed.

3 **USB port, type B** — connects the scanner to the PC.

4 **Ethernet port** — connects the scanner to the network.

5 **Power port** — connects the adapter power cord to the scanner.

6 **Back panel** — removable to allow you to attach the *Kodak* Printer Accessory.

7 **Rear document exit** — allows you to exit exception documents from the rear of the scanner.

8 **Rear document exit toggle** — toggle this switch to enable the straight-through paper path option of the scanner which will allow exception documents to exit through the rear document exit. To close the rear exit, push down on the toggle switch until it clicks into place.

9 **Security lock port** — connects a security lock to the scanner. You can purchase a standard security lock at an office supply store. Refer to the instructions provided with the security lock for installation procedures.

Optional Printer Accessory: Printer access view

The illustration below shows the operating components of the printer. For installation instructions, see the instructions that were packed with your *Kodak* Printer Accessory.

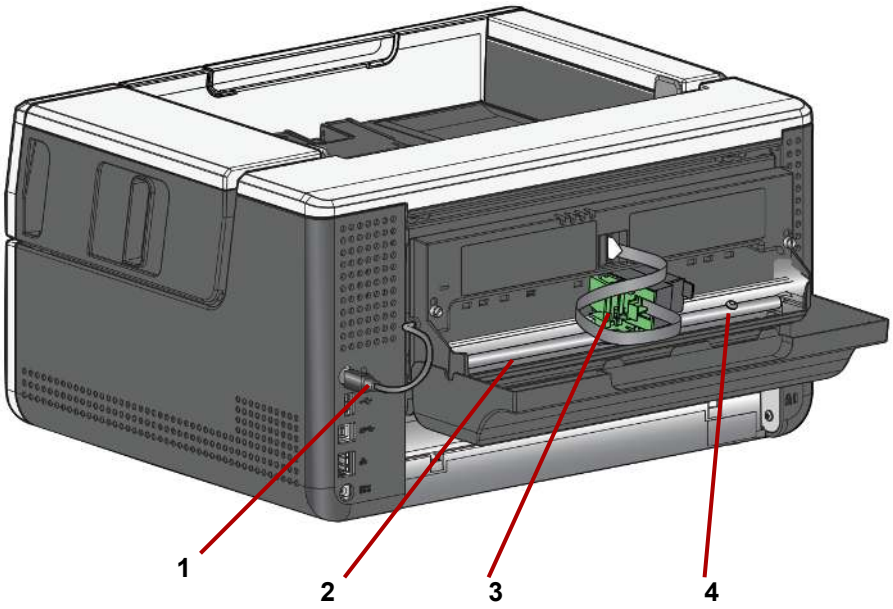

1 **Printer cable** — this cable connects directly to the scanner to allow communication to the printer.

2 **Print positions** — 11 print positions are available.

3 **Printer carrier/cartridge** — allows rear printing on scanned documents.

4 **Print location screw** — remove this screw if you want to use 11 print positions. If you leave the screw in place, only 9 print positions will be available.

2 Installation/First Scan

Installation

The following is a list of steps you will need to perform in order to get your scanner set up and connected to your computer.

1. Unbox your scanner.
2. Set up your scanner for the first time.
3. Install driver software.
4. Verify the scanner's firmware.
5. Optionally update the scanner's firmware.
6. Optionally install available Alaris scanning software.

NOTES:

- When installing updates, update the driver software before updating the scanner's firmware.
- If you have already performed all of the steps in the *Installation Guide* skip this section.

Unboxing the scanner

Follow these steps to unbox your scanner and get it ready to set up.

1. Open the scanner box.
2. Remove all the contents from the scanner box.
3. Remove all the shipping tape and packing material from the scanner.
4. Find the *Installation Guide* and open it.
5. Verify the contents of the scanner box. (Refer to the left panel of the *Installation Guide*.)

NOTE: When positioning the scanner, be sure to provide adequate clearance at the back of the scanner if you will be using the rear document exit or the *Kodak* Printer Accessory.

Setting up your scanner

Follow these steps from the *Installation Guide*.

1. Attach the correct AC plug adapter to the power supply. Attach the power supply to the scanner, and then to a power outlet.

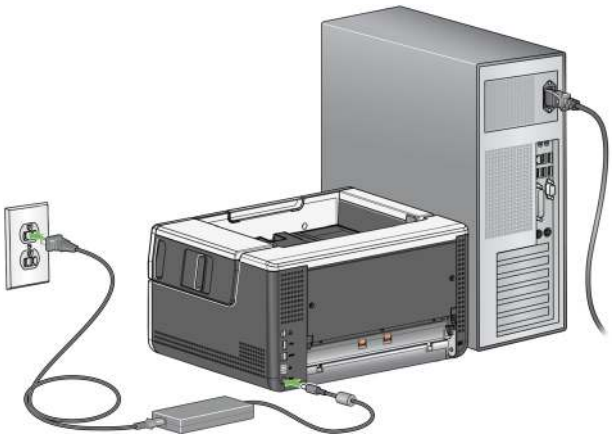

2. Turn the scanner on by pressing the power button on the front of the scanner. When you turn on the scanner, the input tray will open if it is not already opened and the power button will flash for a few seconds.

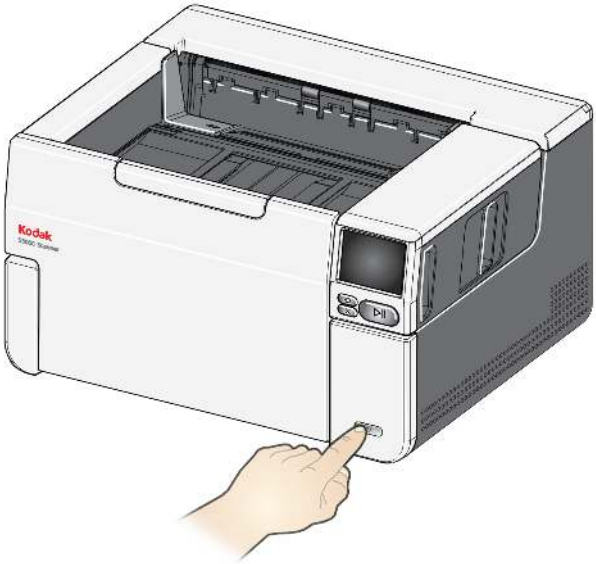

3. The language screen will be displayed, unless the scanner was previously configured. If the language screen is displayed, select a language.
4. If the scanner was previously configured, you can reset the scanner so it will start this set up again:

- Press on the scanner's display to open the Settings menu.
- Scroll down to "Reset", then press it.
- Follow any prompts.

NOTE: The Settings menu can also be used to change individual network and power settings.

- To navigate through the scanner's display set-up screens, make your selection(s) and then press the right arrow to go to the next screen/step.
- To go back to the previous screen/step, press the left arrow .

Configure network settings

There are two setup paths:

- **Setup Wizard** - Allows you to use the scanner's touch screen to set up the scanner for one of two common configurations. This is a good choice for a small company or small group. The choices are:
  - Wired Network (USB is also available)
  - USB Only (Wired Network Access is turned off)
- **Scan EasySetup Document** - Allows you to scan a previously created EasySetup configuration document. This is more suited for a large installation where a system administrator can set up the parameters for uniform use across the company or multiple sites.
  - To create an EasySetup configuration document, go to https://easysetup.kodakalaris.com and follow the instructions. You can then print the PDF for your use, or e-mail the PDF to your users.

NOTE: You can cancel out of the network setup process by pressing the ✕ button on the scanner. If you cancel, the scanner will use the default network settings: Wired Network is turned on/enabled in automatic (DHCP) mode, and USB is available.

Install ferrite core

If you are using an Ethernet cable, install the provided ferrite core. Without a properly attached ferrite core, the scanner may cause interference to nearby wireless devices.

1. Open the ferrite core that came with the scanner.

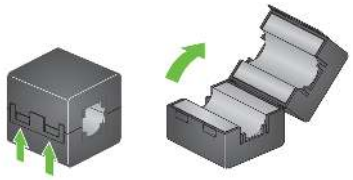

2. Wrap the Ethernet cable around the ferrite core as shown. Place it approximately 3 in./7.6 cm from the end of the Ethernet cable that will be plugged into the scanner.

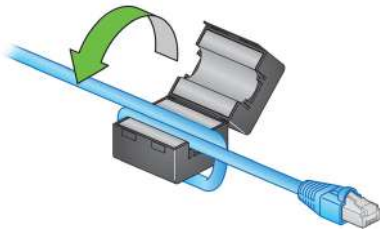

3. Close the ferrite core. Be careful not to pinch the Ethernet cable.

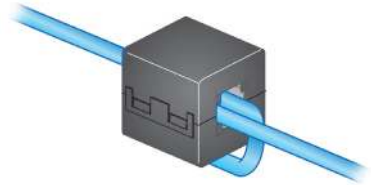

Install driver software

While the driver software on the provided disc will work with your scanner, to assure you have the latest software, please download it from the scanner's product support website.

You should only use the disc from the scanner box if your PC does not have access to the internet or you are unable to download executable files.

NOTE: The disc only contains driver software for Windows Operating Systems. You must go to the scanner's product support website (below) to get drivers for other Operating Systems.

NOTE: If you use the RESTful Web API to integrate your business app or application to the scanner, the drivers are not required.

1. If your computer has access to the internet, obtain the driver software from the scanner's product website:

   -Go to your scanner's product support website:

   S2085f:
   www.AlarisWorld.com/go/S2085finstall

   S3060/S3060f/S3100/S3100f/S3120:
   www.AlarisWorld.com/go/S3000install

   -Scroll to the driver section that matches your computer's Operating System.

   -Select the file to download. For Windows, "Windows – EXE". For Linux, pick the package that is appropriate for your distribution.

   -Run the driver software installer.

2. If you are unable to download from the scanner's product website, and your computer is running a Windows Operating System:

   -Place the disc from the scanner box into the disc drive of your computer.

   -If your computer does not automatically start the installer, browse to the disc and run set_up.exe.

3. Follow the steps of the "*Kodak* S2000f/S3000 Scanners" driver software installation. Be sure to follow the 'Typical' installation in order for your computer to be properly connected to your scanner and to verify the scanner is working.

Verify scanner's firmware

Follow these steps to see if your scanner's firmware needs updating.

1. Determine your scanner's firmware version by doing the following on the scanner:
   - Make sure your scanner is turned on and in the Ready screen.
   - Press the button to display the settings screen.
   - Press the *Information* menu item
   - Scroll down to get the scanner's current firmware version number. It is shown after 'Firmware:'. It will be a six-digit number.
   - Press the button to exit the *Information* menu and return to the Settings screen.
2. Determine the version of the firmware that is on the scanner's product website:

   -Go to your scanner's product support website:

   S2085f:
   www.AlarisWorld.com/go/S2085finstall

   S3060/S3060f/S3100/S3100f/S3120:
   www.AlarisWorld.com/go/S3000install

   -Scroll to the Firmware section that matches your scanner's model name.

   -If the version is not shown, then click the 'Release Notes' link.
3. If the firmware version number on the website is higher than the scanner's firmware version, then you should update the firmware version.

Update scanner's firmware

Use one of the following methods to update your scanner's firmware:

- Computer with driver software installed – Use this option when the computer already has the driver software installed and it is connected to/can access the scanner.
- Web Browser – You have a scanner that has at least one network connection turned on/enabled, and you have a computer that is on the same network as the scanner.

Computer with driver software installed

Follow these steps to update your scanner's firmware from a computer that already has the driver software installed.

The scanner must be connected/available to the computer. If you can scan from the computer, then it can be used to update the scanner's firmware.

1. Go to your scanner's product support website:

   S2085f:
   www.AlarisWorld.com/go/S2085finstall

   S3060/S3060f/S3100/S3100f/S3120:
   www.AlarisWorld.com/go/S3000install

2. Scroll to the Firmware section that matches your scanner's model name.
3. Download the firmware installer that matches your computer's Operating System.
4. Make sure your scanner is turned on, is connected/available to your computer and not showing any errors.
5. Run the firmware installer.
6. Follow the steps of the firmware installer.

Web Browser

Follow these steps to update your scanner's firmware via the scanner's internal web page. You will do this using the web browser from a computer that is on the same network as the scanner.

NOTE: Networking is turned on/enabled by default.

1. Go to your scanner's product support website:

   S2085f:
   www.AlarisWorld.com/go/S2085finstall

   S3060/S3060f/S3100/S3100f/S3120:
   www.AlarisWorld.com/go/S3000install

2. Scroll to the Firmware section that matches your scanner's model name.
3. Select the "Web Browser (.sig)" file to download
4. Make sure your scanner is turned on and available on the network and not showing any errors.
5. Obtain the scanner's network IP Address:

   -Scroll down to the IP Address. (Make a note of the IP address, it is needed in the next step.)

   -Press the button to exit the Information menu.

6. Open a web browser on the computer and do the following within the web browser:

   -Enter the scanner's network IP Address to get to the scanner's internal web page.

   -Click the 'Support' tab.

   -Click the "UPDATE SCANNER FIRMWARE" button; it is in the lower left corner.

   -Click the 'Browse' button.

   -Navigate the folder, on the computer, that you downloaded the *.sig file to.

   -Select the *.sig.

   -Click the "Start Firmware Update" button.

   -Wait for the firmware update to complete. It may take several minutes.

Available Alaris Scanning Software

Easy-to-use Alaris scanning applications have been customized to work with your scanner (see descriptions below). They can be downloaded from your scanner's product support website:

S2085f: www.AlarisWorld.com/go/S2085fsupport
S3060: www.AlarisWorld.com/go/S3060support
S3060f: www.AlarisWorld.com/go/S3060fsupport
S3100: www.AlarisWorld.com/go/S3100support
S3100f: www.AlarisWorld.com/go/S3100fsupport
S3120: www.AlarisWorld.com/go/S3120support

More information about Alaris scanning applications can be found at:

www.AlarisWorld.com/go/scanningsoftware

Smart Touch

An easy-to-use application that allows you to scan your paper documents, then search for and view the digitized documents.

Capture Pro LE

An application that allows you to quickly scan large, high resolution, or uncompressed documents, then capture and edit critical data and output batches to repositories or other applications.

Getting your scanner ready

1. Be sure the scanner is on and ready to scan (the perimeter of the power button will flash several times and then stay illuminated).
2. When the scanner is not is use, the input tray can be folded up against the scanner. Be sure that the input tray is lowered when scanning.

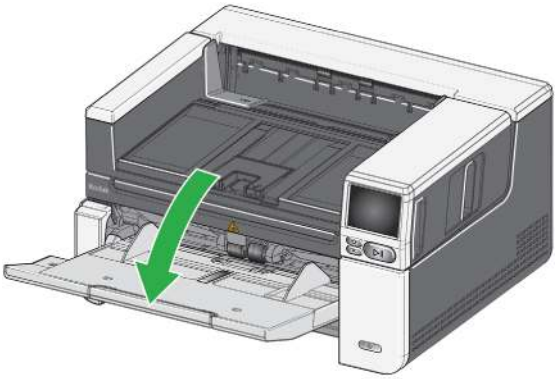

3. Adjust the side guides on the input tray to meet your scanning needs. (See “Adjusting the input tray for document length” on page 19.)
4. Select your scanning application. The scanner comes with Smart Touch functionality and *Kodak* Capture Pro LE. For more information, see “Available Alaris Scanning Software” on page 16.

Getting your documents ready to scan

- Standard paper size documents feed easily through the scanner. When organizing your documents for scanning, stack the documents so the lead edges are aligned and centered in the input tray. This allows the feeder to introduce documents into the scanner one at a time.
- Remove all staples and paper clips before scanning. Staples and paper clips on documents may damage the scanner and documents.
- All inks and correction fluids on the paper must be dry before scanning is started.
- Torn, damaged or crushed pages can be transported successfully through the scanner. However, no scanner can transport every possible type of damaged paper. If in doubt about whether a specific damaged document can be transported through the scanner, you can use the flatbed or place the document in a clear protective sleeve and use the rear document exit. Sleeves should be manually fed, one at a time, folded edge first, when using the gap release or the rear document exit. (For more information, see “2 Gap Release” on page 3 and “7 Rear document exit” on page 7.)

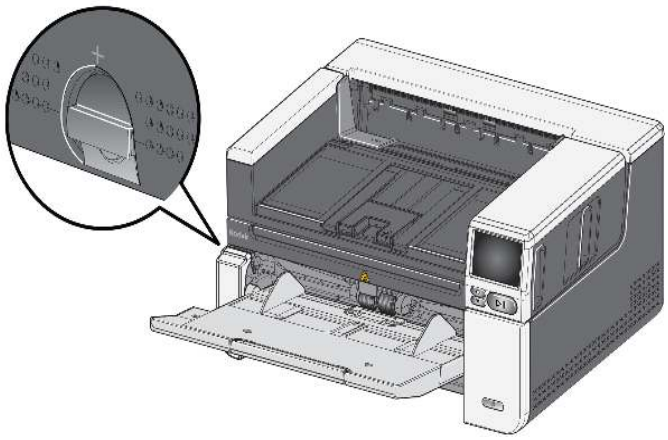

Initial scan with an Alaris scanning application

Alaris scanning applications are available for download with your scanner purchase and will allow you to quickly and easily perform common scanning tasks, such as:

- create a searchable PDF of a printed report
- scan an invoice and store it with your other invoices
- scan a photo to add to a presentation

If you installed an Alaris scanning application, the following steps show you how to create an output file of your document. For more information about the scanning options enabled by Alaris scanning applications, refer to the documentation for your specific application.

1. Put paper in the scanner input tray, face up and lead edge first.
2. Using the scroll bar on the scanner display screen, scroll up or down until Color PDF appears. (If you are using Capture Pro, choose *Scan to PDF*.)
3. Using the touch screen, press *Color PDF*. The document will be scanned. When you output it, the PDF file with your image(s) will be sent to a folder. Refer to the documentation for your Alaris scanning application to see details of the folder location.

Power saver mode and turning the scanner off

Power saver mode: by default, after 15 minutes of inactivity, the scanner will automatically enter into power saver mode.

To activate the scanner from power saver mode, do one of the following:

- press the Home button
- press the Pause/Resume button, or
- press Cancel on the touch screen

Turning off the scanner: press the **Power** button for more than one second. By default, if the scanner is in power saver mode for more than 60 minutes, the scanner will power off. To power the scanner back on, press the Power button.

NOTE: for instructions on how to adjust the power settings, see“Power” on page 34.

3 Scanner Adjustments

Adjusting the input tray

You can adjust the input tray to accommodate your scanning needs.

- **Adjusting the side guides** — the side guides can be moved in or out to accommodate document size. When adjusting the side guides, place your hands on the bottom of the side guides, over the slots in the tray to slide the guides in and out.

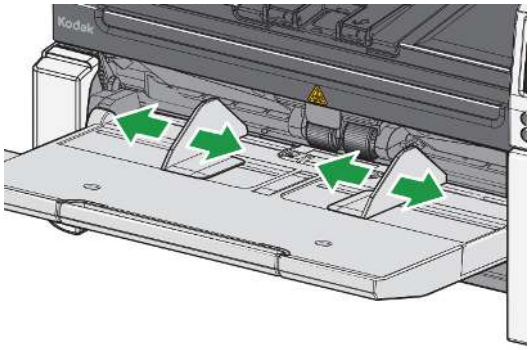

- **Adjusting the input tray for document length** — the input tray extender has two positions. When you are scanning lettersize or A4 documents in landscape mode, you do not need to pull out the input tray extender.
  - **Document lengths up to 11 inches / 27.94 cm** — pull the extender out to the first position.
  - **Document lengths from 11 to 17 inches / 27.94 to 43.2 cm** — pull the extender out to the full position.

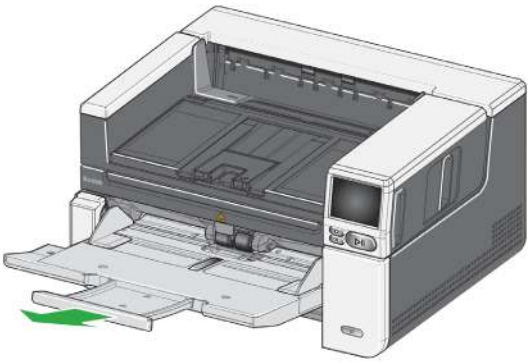

- **Document lengths more than 17 inches / 43.2 cm** — if you are scanning documents longer than 17 inches / 43.2 cm, the scanner driver **must** be set to accommodate these long documents. Be sure to verify that the **Maximum Length** option on the Device-General tab (TWAIN Datasource) or the **Longest Document** option on the Scanner tab (ISIS Driver) is set to longer than the longest document being scanned.

NOTE:

- Operator assistance may be required for scanning documents greater than 17 inches / 43.2 cm. Other scanner driver settings may limit the length of the document that you can scan.
- It is recommended that you use a document extender if you are scanning documents longer than 17 inches (43.2 cm). See page 60 for a link containing available Supplies and Consumables.

Adjusting the output tray

You can adjust the output tray to aide in keeping your scanned documents organized.

- **Adjusting the angle of the output tray** — lift the front of the output tray and the height adjustment tab will release from underneath the output tray.

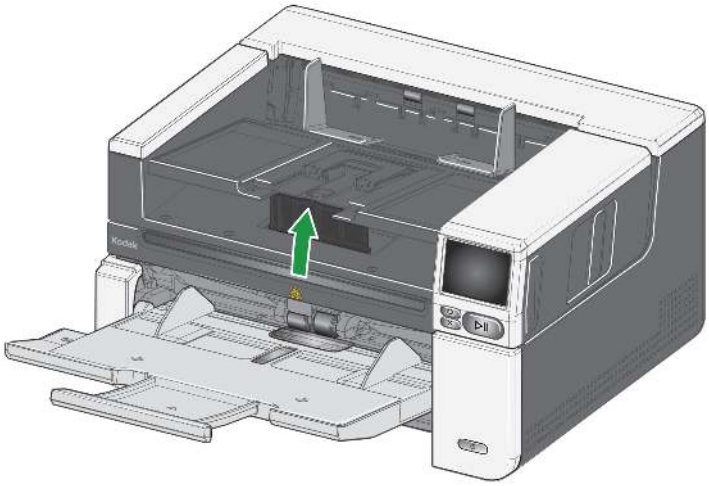

To lower the output tray, gently push the height adjustment tab underneath the output tray while lowering the output tray. This may improve output stacking.

- **Adjusting the side guides** - adjust the side guides on the output tray to match the position of the side guides on the input tray.

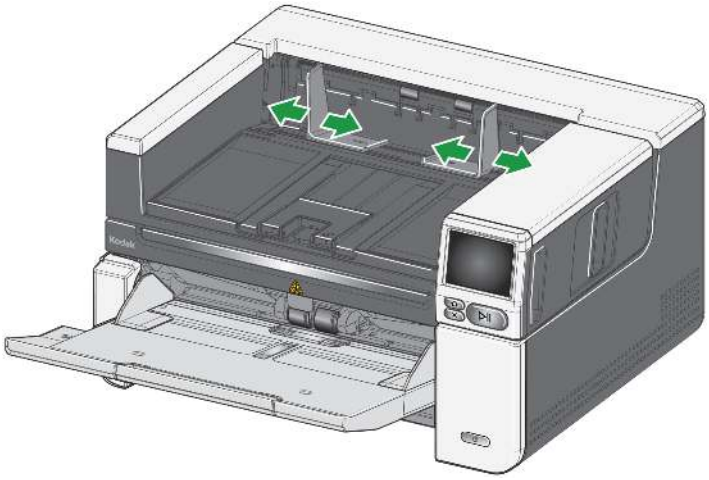

- **Adjusting the document stop** - adjust the output tray document stop to slightly longer than the longest document being fed. If you are scanning documents longer than the output tray will accommodate, fold the document stop flat on the output tray.

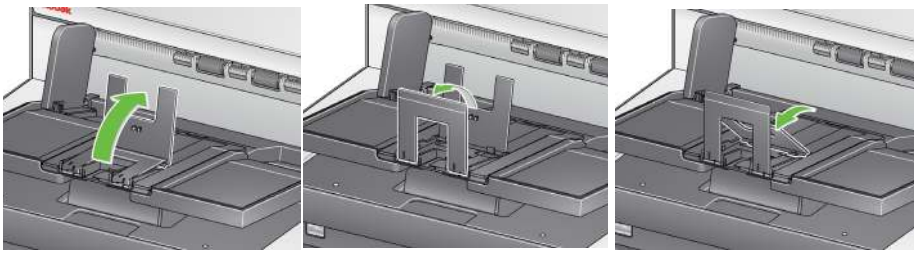

- **Adjusting the output tray for document length**
  - Open the output tray extension to accommodate longer documents.

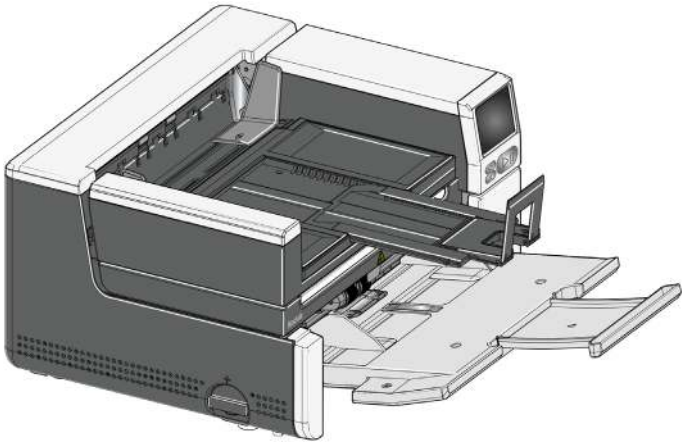

  - With the output tray extended, lift the output tray to engage the height adjustment tab. This position will enable a more uniform stack of documents.

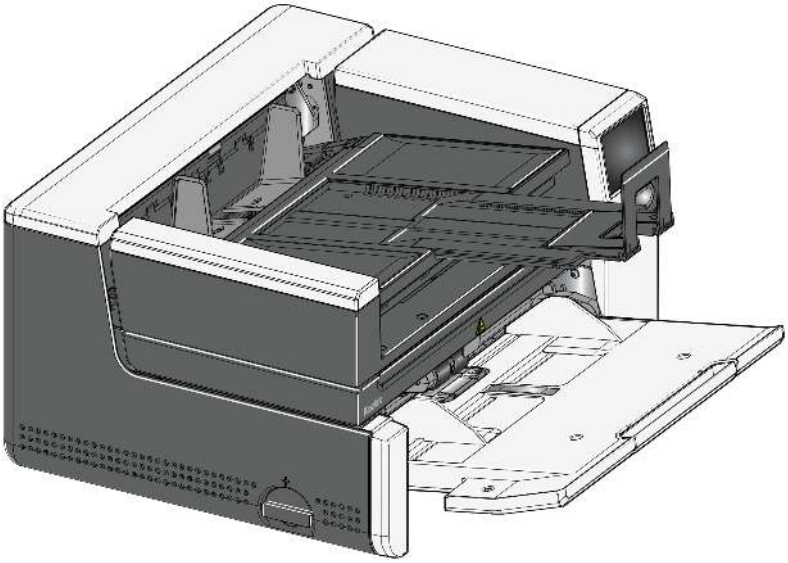

NOTE: It is recommended that you use a document extender if you are scanning documents longer than 17 inches (43.2 cm). See page 60 for a link containing available Supplies and Consumables.

- **Document weights** — the input elevator is capable of holding the approximate weight of 300 sheets of plain 20# bond paper.

Attaching the exit deflectors

The scanner comes with custom exit deflectors and mounts. The deflectors help align the documents as they are deposited in the output tray. Multiple sizes of exit deflectors are included. Depending on the document set you are scanning, attach one of the size deflectors that meet your needs.

Attaching the exit deflector to the mount

Align the tabs on the exit deflector with the slots in the mount and snap into place.

Attaching the mount to the scanner

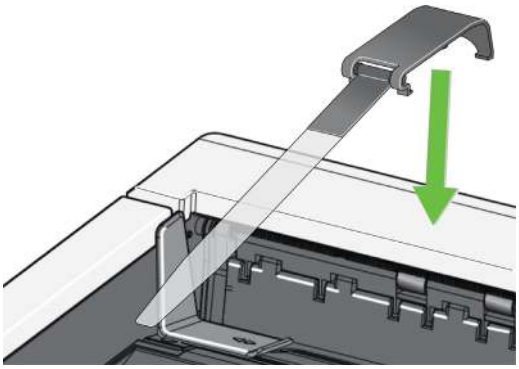

Hook the rear of the mount to the back of the scanner cover and push down on the front of the mount until it snaps into place,

Flatbed scanning

(S2085f, S3060f, S3100f Scanners only)

The flatbed can be used to scan exception documents, file folders, books, magazines, passports and more.

1. Open the flatbed cover (see “Grasp here to open flatbed” on page 3).

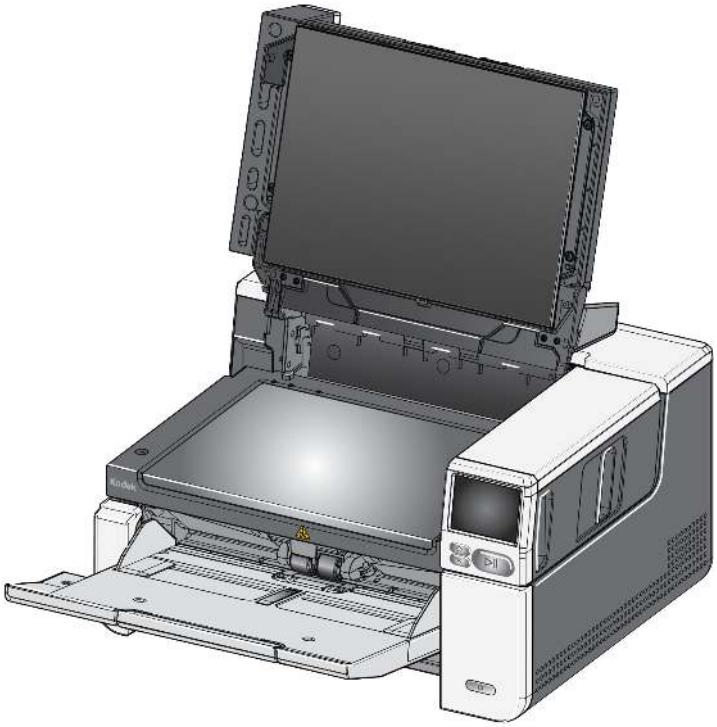

2. Place the document **face down** on the glass platen.

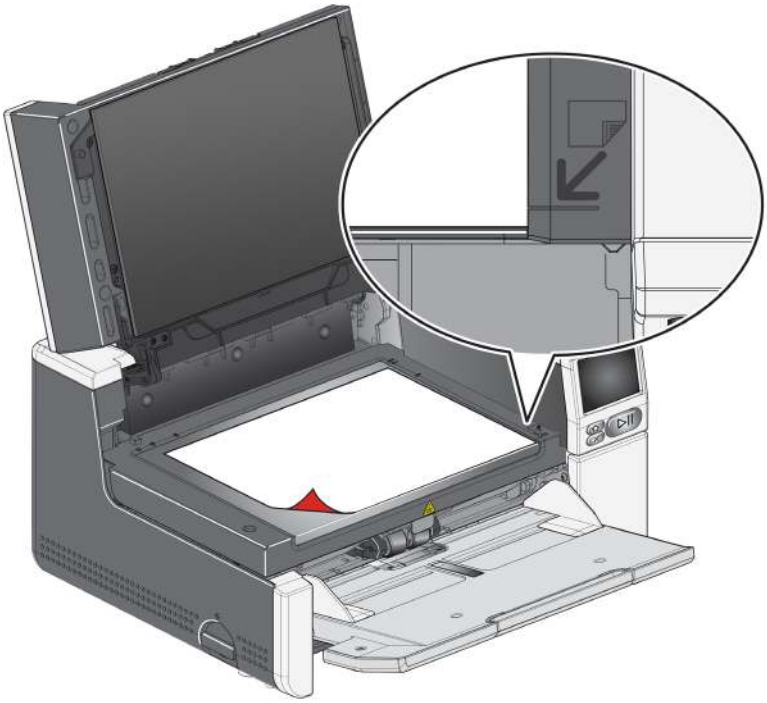

3. Align the document in the lower right-hand corner at the corner arrows.
4. Close the flatbed cover.
5. Initiate the scan by selecting a scanning activity from the scanner touch screen (see “Ready with profiles” on page 38), or from your scanning application.

NOTES:

- When scanning from the flatbed, be sure there are no documents in the input tray of the scanner.
- When scanning a document/book from the flatbed, be sure the flatbed cover is closed. The cover will automatically adjust to the thickness of the document/book.

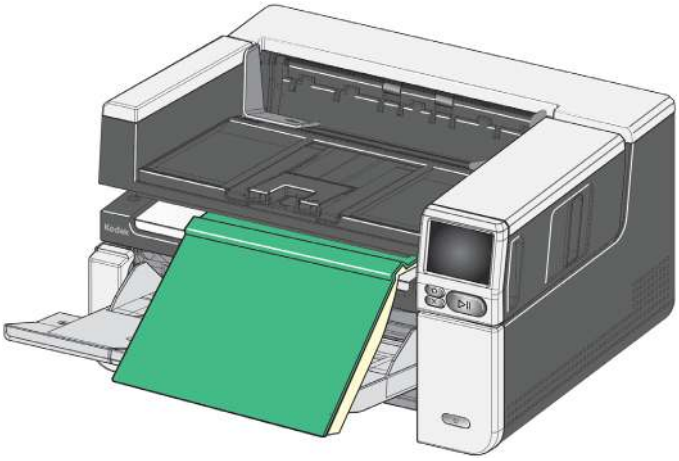

- When placing the document/book on the flatbed, the document may extend all the way to the edge of the flatbed. However, the flatbed will only scan any information that is aligned with the line on the frame of the flatbed glass.

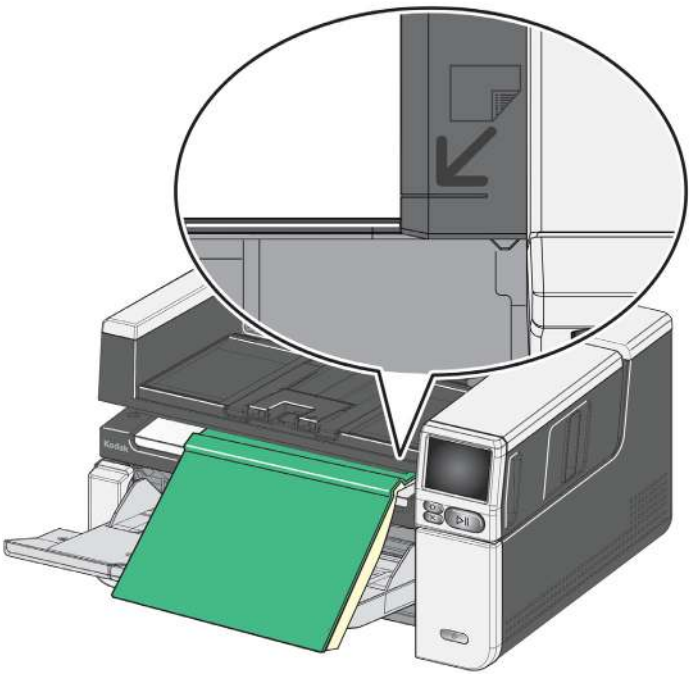

- The background on the flatbed cover must be clean and smooth. If there are any imperfections, it may affect auto crop performance.

NOTE: If the background becomes worn or damaged, it can be replaced. (See page 60 for a link containing available Supplies and Consumables. See “Replacing the flatbed background” on page 60 for the replacement procedure.)

Using the rear document exit

Documents that require special handling (i.e., fragile documents, shipping envelopes, etc.) can be output using the rear document exit. This exit provides the straight-through paper path option that allows an exception document to pass through the transport, thus reducing the possibility of a document jam.

To use the rear document exit, lift the rear document exit lever up.

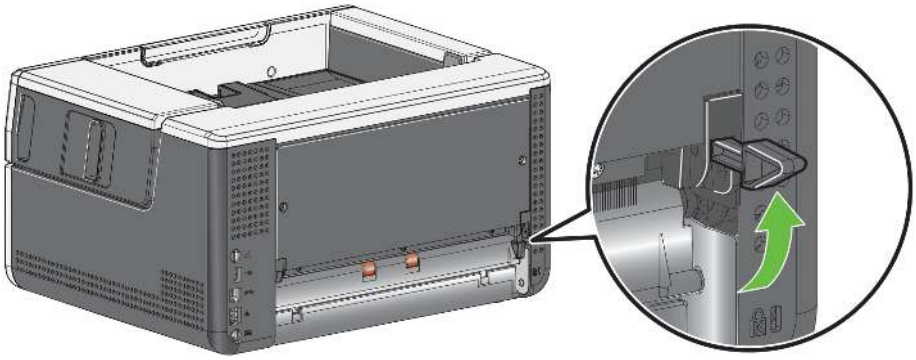

Use the rear document exit when:

- documents are too stiff (e.g., rigid) to make the turn in the transport and are jamming.
- documents are fragile and you do not want to bend them.
- output stacking order is not important.
- scanning directly into the recycle bin when documents are no longer needed after scanning.
- scanning photographs.
- scanning hard cards (e.g., credit cards or identification cards)

NOTES:

- Be sure to lower the rear document exit lever into it’s original position when finished.
- Be sure that you have adequate clearance behind the scanner to feed the document(s) through when using this option.
- When scanning several documents through the rear document exit, the documents will be output in the reverse scanning order.
- When using the rear document exit, you cannot use the document printing option.

Using the Scanner Touch Screen

Status area

The scanner touch screen displays the current state of the scanner.

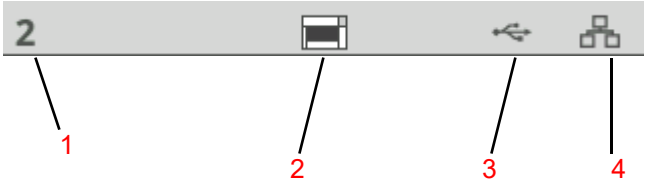

1 - Document count

2 - Paper Present indicator, (if no paper is detected, this icon is displayed.)

3 - Scanner is connected to a computer via USB.

4 - Scanner is connected to the Wired Network.

Touch screen buttons

The S2000f/S3000 Series scanners include a touch screen with color graphic display of scanner information and controls. To navigate the screen, touch a selection or a button.

The menu button leads to the main menu.

The Next button advances to the next screen.

The Back button returns the display to the previous screen.

The pause button suspends scanning.

The start/resume button resumes scanning.

The stop button ends scanning activity.

This icon beside a menu option means you have a choice of “on” or “off” for the option. The colored icon means “on” and the gray icon means “off.”

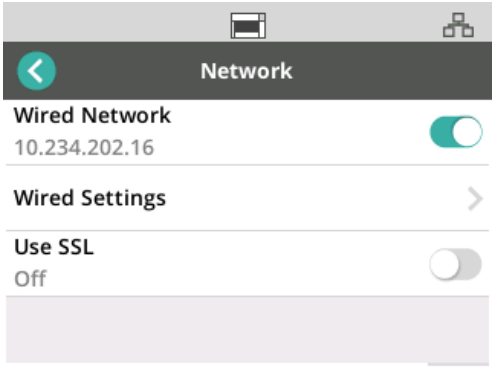

A check mark means the option is selected:

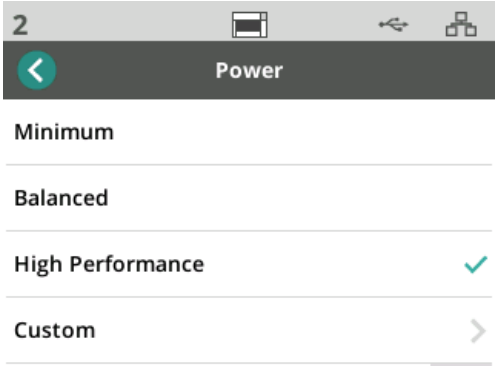

When more options are available than the screen can display, a scroll bar is provided:

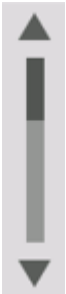

When the worn tire icon appears at the top of the scanner touch screen,

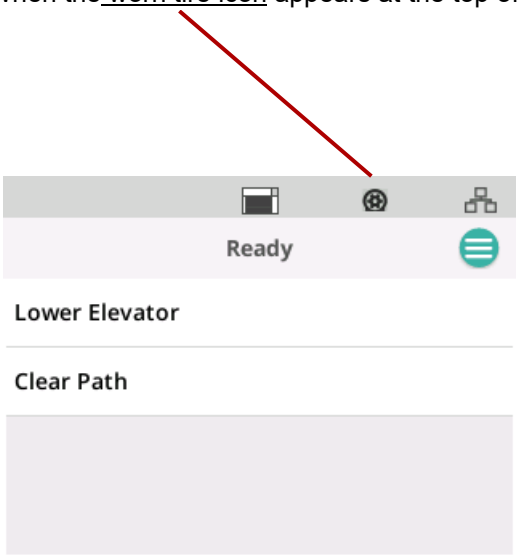

it is time to clean the scanner or replace consumables (rollers, tires, etc.), see “Maintenance” on page 29. This icon only appears if one of the maintenance meters has expired.

Settings screen

The settings screen is the starting point for configuring the scanner. To access the Settings screen, touch the *Menu* button (see “The menu button on page 27), and select *Settings*. From here the user can collect scanner information, perform calibrations, track maintenance items, and view scanner events that have occurred during the current power on cycle.

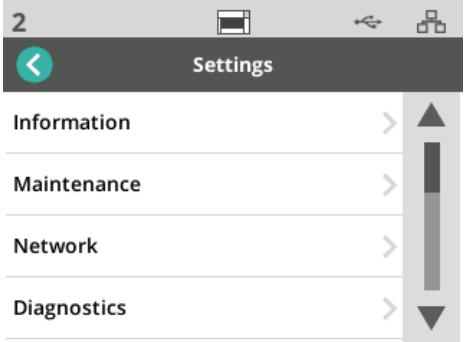

The following options are available in the *Settings* menu:

Information

The Information option will display Pairing ID, Network Name, Network address info, Firmware, Serial number, Total Pages, First Scan, Transport, and Power-On meters, Transport, Front Lamp, and Rear Lamp meters.

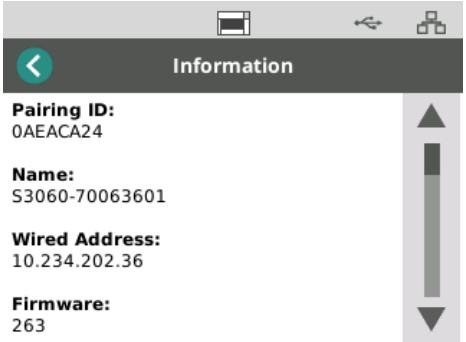

Maintenance

The Maintenance option provides access to the maintenance meters logs. The meters for cleaning scanner components and replacing scanner consumables can be adjusted using this feature.

NOTE: The worn tire icon (see page 28) appears when a maintenance threshold is exceeded.

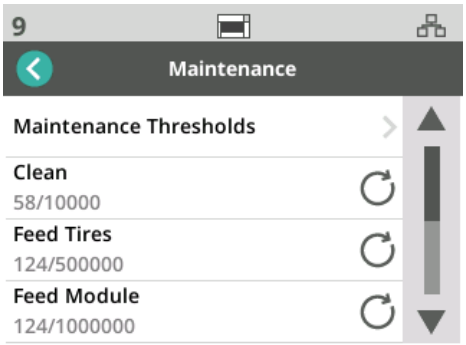

Each item in the meter menu displays the number of scans since the last cleaning or replacement, and the maximum recommended number of scans before the next cleaning or replacement. In the example above there have been 124 scans since the last Feed Module replacement; a maximum of 1,000,000 scans are recommended before the next replacement.

There are meters for the following items:

- Cleaning
- Feed Tires
- Feed Module
- Urging Tires
- Pre-separation Pad
- Separation Tires
- Separation Module

To adjust the maximum number of scans for any item:

1. Select the Maintenance Thresholds bar.
2. Select the item to be adjusted. The *Reset Meter* screen will be displayed.
3. Reply “Yes”
4. Using the touch screen key pad, enter the new maximum maintenance interval.

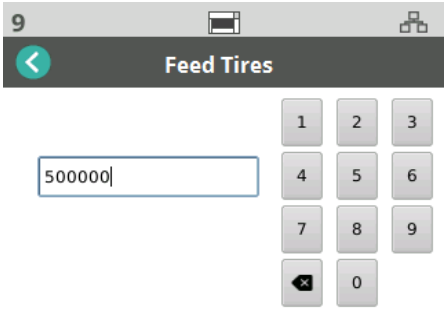

Network

Use the Network option to select the network your scanner will access. Touch the toggle buttons to enable/disable Wired Network and/or secure socket connections.

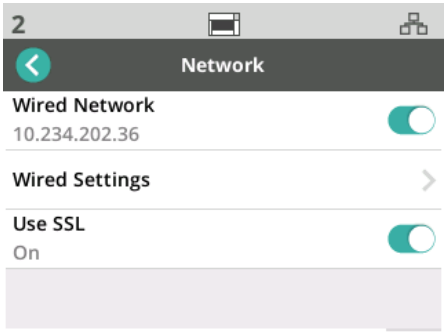

If you are using Wired Networks, you can choose between Automatic and Manual network address configuration.

In the Automatic setting, the network will assign an IP address to scanner.

To connect your scanner to a static IP address:

1. Select Manual.
2. Select Settings.
3. Using the touch screen key pad, enter the Static IP Address, Subnet Mask, and Default Gateway.

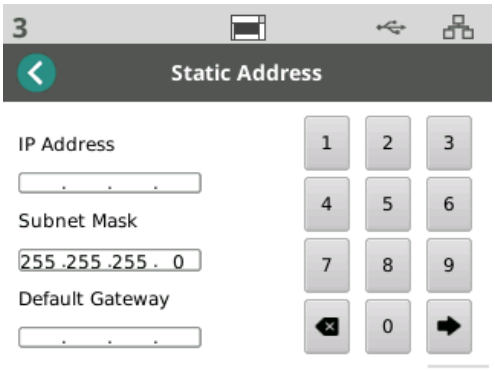

Diagnostics

Use the Diagnostics option to view scanner events that have occurred during the current power cycle, or to perform various calibrations.

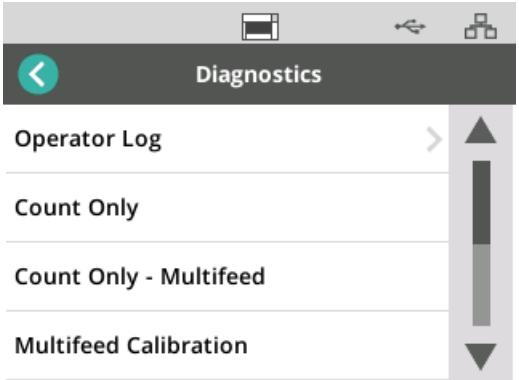

- **Operator Log** - displays scanner events that have occurred since the last time the scanner was powered on. Each event entry lists time of occurrence, error code, and a description of the event. For example, “Scanner Failed Initialization, Call Service.”

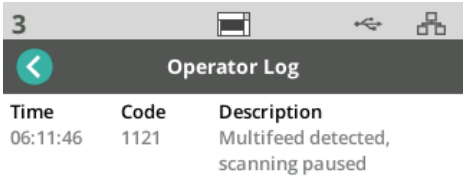

- **Multifeed Calibration** - initiates multifeed calibration (see “Perform a Multifeed Calibration on page 65).
- **Count Only** - to count the documents in the elevator without scanning them, select *Count Only* and follow the steps on the scanner screen. The total number of documents will be displayed in the status area.
- **Count Only Multifeed -** this option allows you to count documents without scanning, however, when a multifeed is detected, the scanner will stop. Clear the multifed documents and press the Pause/Resume button to continue scanning.
- **Flatbed Calibration** - flatbed image calibration is performed at the factory. This may only be need after a flatbed firmware update (this is a rare occurrence).
- **Touchscreen Calibration -** Touch screen calibration is used to verify that the touch points on the touch screen are working correctly. The touch screen is factory-calibrated; this should not be performed unless directed to do so by Technical Support.
- **Alterations -** This option is for Service Use only. Only use this option when directed to do so by Kodak Alaris Service personnel.

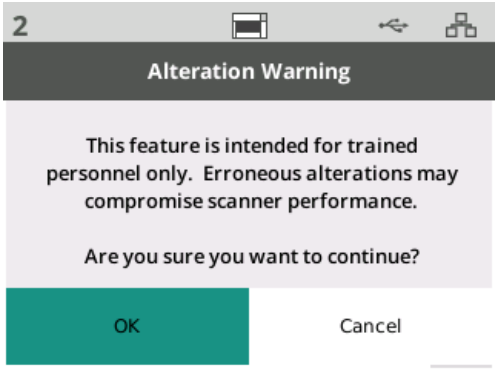

Easy Setup

Kodak Alaris provides an easy-to-use alternative to configuring the scanner's network settings. The scanner operator can scan an EasySetup document, and the network settings will be configured automatically.

Obtain an EasySetup document.

1. From the *Settings* screen, select *EasySetup*.

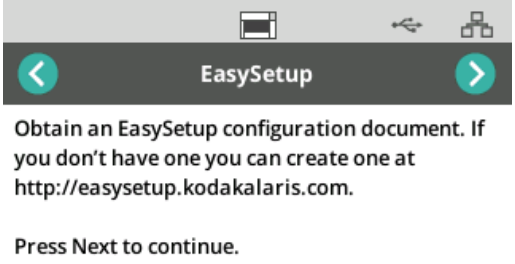

2. Place the EasySetup document in the input tray, face up.

3. Touch the Next button .

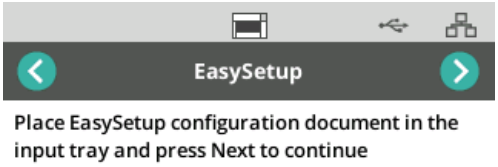

4. The scanner will display the status of the configuration process:
   - Configuring EasySetup
   - Scanning
   - Processing
   - Success message

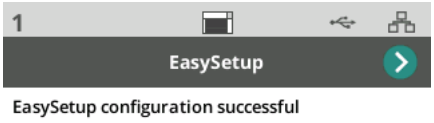

Power

The power saver (number of minutes the scanner is idle before entering power saver mode) and power off (number of minutes the scanner is idle before the power is turned off) settings are adjustable. Select *Power* to adjust the settings.

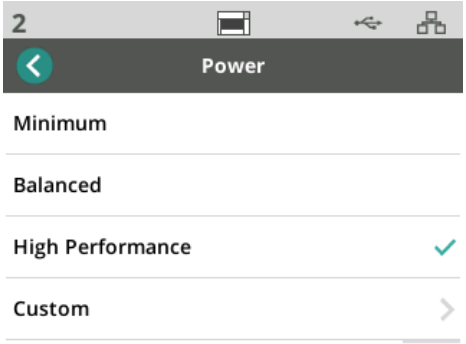

1. Choose from one of three 3 pre-set power configurations:
   - **Minimum**: *Power Saver* is set to 5 minutes; *Power Off* is set to 240 minutes.
   - **Balanced**: *Power Saver* is set to 15 minutes; *Power Off* is set to 240 minutes.
   - **High Performance**: *Power Saver* is set to 120 minutes; *Power Off* is disabled.
2. Or, you can customize the power settings by selecting Custom.

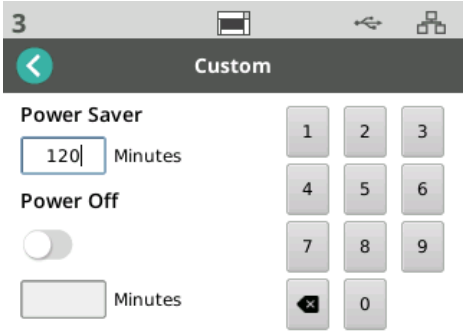

   - Enter the number of minutes for *Power Saver*.
   - Use the toggle button to enable or disable *Power Off* mode.
   - If *Power Off* is enabled, enter the number of minutes for *Power Off*.

Language

Use the Language feature to select or change the language for the Scanner Touch Screen.

Elevator

Use the Elevator feature to enable/disable the Automatic input elevator. When set to Automatic, the elevator will raise to the highest position as soon as documents are placed in an empty elevator.

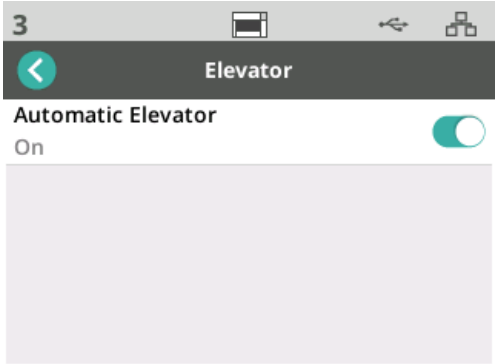

Feed adjustment

Use this feature to adjust the length of time the feed rollers are engaged. If short, light-weight, thin, or delicate documents are causing paper jams; try changing this setting. Select from -1 to -4 (shortest time) to find the optimum setting for the documents you are scanning. This adjustment does not affect the transport speed of the scanner.

1. Select *Feeding* from the Settings menu.
2. Select *Feed Time Adjustment.*

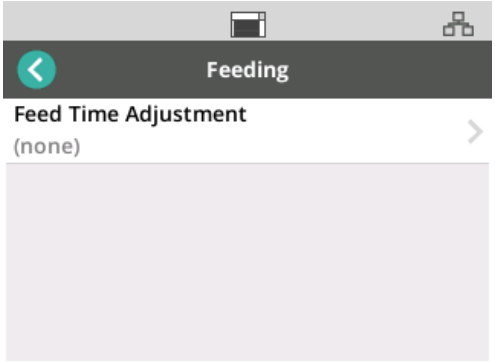

3. Choose the option that best suits the type of document you are scanning.

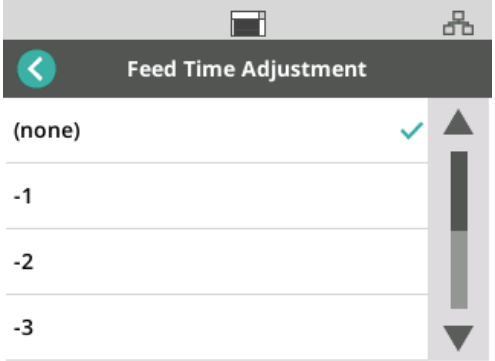

4. If you choose -1, -2, -3, or -4; set the scanner speed to *Highest Speed*, see “Speed” on page 36.

Speed

Use the Speed feature to adjust the speed of the scanner and the resolution of scanned images.

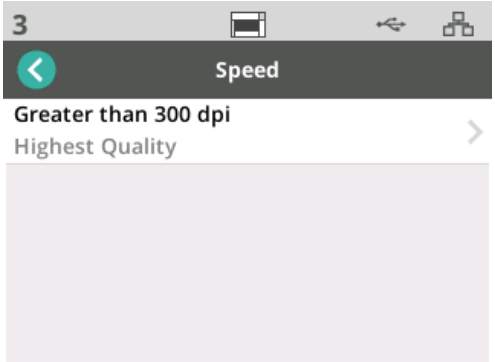

1. Select *Speed* from the *Settings* menu.
2. Select *Greater than 300 dpi*.

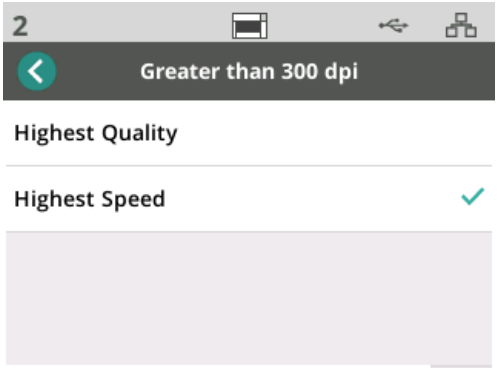

3. Choose a setting:
   - **Highest Quality** - runs the scanner at a slower speed but produces the highest quality image.
   - **Highest Speed** (default) - runs the scanner at a faster speed and produces a good quality image.

Sharing

Use this feature to enable sharing of the scanner by multiple PCs.

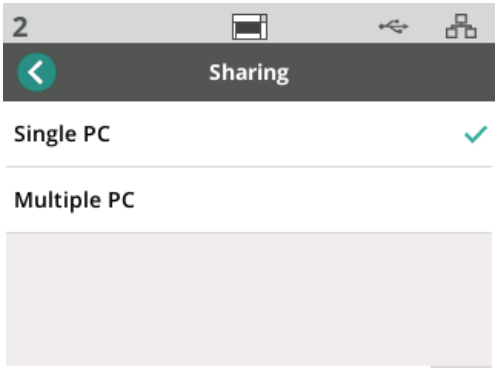

- **Single PC** (default) - restricts network access to the scanner to a single PC.
- **Multiple PC** - enables sharing the scanner by multiple PCs.

Admin Access

Use this option to restrict access to the scanner. If Admin Access is enabled, the scanner operator will be required to enter a password to access some settings. The password can be changed from this screen at any time.

1. Select *Admin Access.*
2. Touch the *Add Password* button.
3. Enter a password.
4. Touch the “go” button.

Reset

Use this feature to **reset all** the options in the *Settings* Menu to the factory defaults.

Ready States

Kodak Alaris scanning applications can register scanning activities or user profiles with the scanner.

Ready with users

When the scanner's Sharing Mode is configured as Multiple PC, users that are registered with the scanner are listed on the scanner display screen.

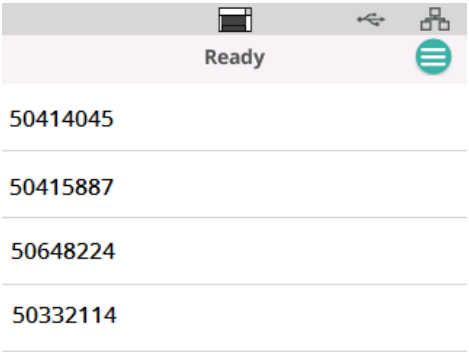

- Select your name (or user ID) from the list.
- You may be asked to enter a password.

If the scanner's Sharing Mode is set to Single PC, this screen will not appear.

Ready with profiles

Once activities are registered with the scanner by a Kodak Alaris scanning application, scanning activities can be initiated at the scanner. If the scanner's Sharing Mode is configured as Single PC, this will be the first screen that appears.

Touch the selected scanning activity to begin scanning.

Scanning in progress

When scanning is in progress, the scanner display will count the number of documents scanned thus far.

The scanned display will report when the scanning activity is completed. The display will include the total number of documents scanned.

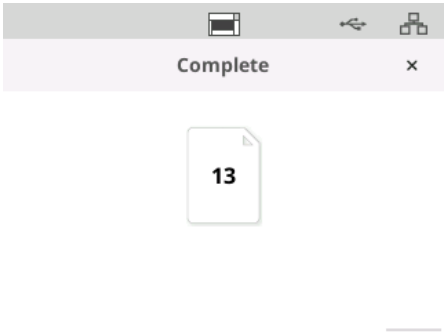

Misfeed Detection Control

A misfeed is more than one page passing through the imaging area together. It results in either one or more images not being captured, or an image that combines content from more than one page. If *Multifeed* or *Intelligent Document Protection* are enabled in the scanner driver, they can be temporarily disabled at the scanner touch screen.

Disable or Re-enable Misfeed Detection
While a scanning activity is in progress:

1. Touch the menu button .
2. Touch the toggle button to disable or re-enable Misfeed Detection.

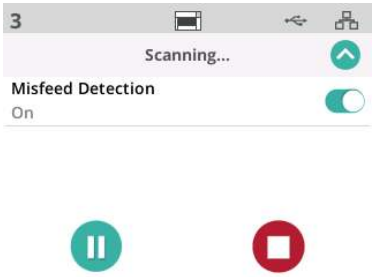

NOTE: If **both** *Multifeed* **and** *Intelligent Document Protection* are **not enabled** in the scanner driver, this screen will not appear.

Scanning paused

You can pause scanning at any time by pressing the button.

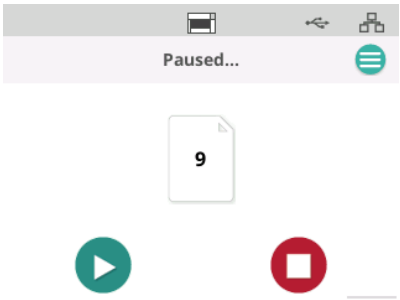

The scanner display will reflect that the scanning activity is paused.

Resume scanning by touching the button.

Document Handling

The setting for Document Handling determines how the scanner transports pages through the scanner. It affects how pages are fed into the scanner, how fast they move through the scanner, and how they are placed in the output tray. An enhanced handling option can improve output stacking. You may find it helpful for mixed page sizes, lightweight paper, paper with some static, or paper with some curl.
Special document handling can be set up for your job using the driver.

To adjust Document Handling setting

During scanning, you can adjust document handling using the scanner screen:

1. Pause the scanner.
2. Touch the menu icon.
3. Select *Document Handling*.

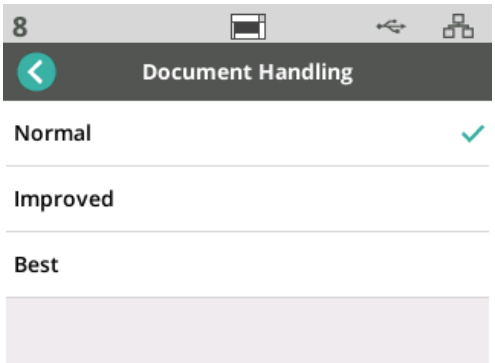

4. Select Normal, Improved, or Best based on these guidelines:
   - Normal: No additional handling is performed. Use Normal when all documents are similar in size.
   - Improved: Aids in controlling how the documents are stacked/ordered in the output tray for mixed document sets. Improved should work for the majority of mixed sets.
   - Best: When your document set contains great variability in size, this option provides the best control of how pages are stacked in the output tray.

Elevator and paper path controls

If these controls are not visible because the “Ready with profiles” screen is displayed, they can be accessed from the menu.

Touch the menu button

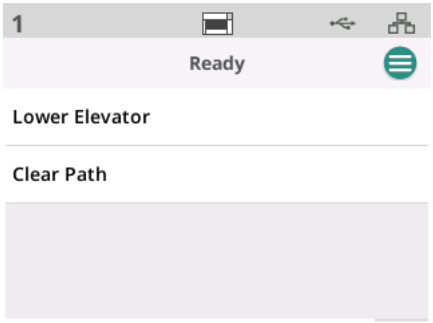

- **Lower Elevator** - touch this option to lower the elevator (input tray) to the 300 sheet position. Use this option when you need to make additional room in the input elevator tray for adding documents to the stack.
- **Clear Path** - touch this option to clear the scanner transport area of any documents. This is useful after a paper jam. You may have to repeat this several times to clear the entire paper path.

4 Document Printing

Using the *Kodak* Printer Accessory

This chapter provides information for using the *Kodak* Printer Accessory for the S2000f/S3000 Series Scanners. In order to use the printing option you must have purchased and installed the *Kodak* Printer Accessory.

NOTE: See the instructions that came with the Printer Accessory for procedures on how to install this accessory.

Refer to the *Scanning Setup Guide for the TWAIN Datasource* or *ISIS Driver* on the CD or your scanning application documentation for more information about enabling printing and setting up print strings.

The Printer Accessory operates at full scanner speed. The printer can add a date, time, document sequential counter and custom messages.

The print string can be configured to include information that stays the same for each document; such as batch name or operator and information that may change for each page scanned; e.g., the document sequential counter.

All printer controls and functions are accessible through the TWAIN Datasource or ISIS Driver.

NOTES:

- Printing must be enabled and an ink cartridge must be installed before starting a scan session.
- Clean the scanner's paper path components daily when using the printer.
- If you attempt to scan with a job setup that has Printing enabled, and you do not have a printer installed, an error message will be displayed on the scanner screen.
- You cannot use document printing if you are using the rear document exit.

Printer specifications

More information about the following specifications can be found in the TWAIN Datasource or ISIS Driver Scanning Setup Guide.

Characteristic	Description
Maximum lines	1
Maximum characters	40 (including spaces)
Print locations (horizontal)	11 manually set NOTE: You must remove the Print Location screw for 11 positions; otherwise only 9 positions will be available. See “Changing print positions” for more information.
Print locations (vertical)	Determined by driver settings
Print orientation	0 and 90 degrees
Font size	Normal, Bold and Extra Bold NOTE: Not all languages can support a Bold font based on the complexity of the characters, such as half-width Katakana.
Print side	Rear (post-scan)
Minimum printing distance from document lead edge	0.35 in. / 0.89 cm
Ink cartridge	Black: HP-C6602A Red: HP-C6602R
Characters per ink cartridge	Up to 1,500,000 to 2,000,000 (based on font size used)
Static fields available	User-specified messages via capture software application
Dynamic fields available	Up to a nine-digit sequential document number, date, four-digit time
Languages supported	Any phonetic language. For example: Dutch, English, French, German, Italian, Portuguese, Spanish, Japanese (half-width Katakana)

Installing/replacing the ink cartridge

CAUTION: Do not adjust or service the printer during scanning.

You must install the ink cartridge before using the printer. Refer to “Supplies and consumables” on page 60 for ordering information.

After initial installation, replace the ink cartridge when:

- printed characters appear light or uneven
- missing characters or inconsistent character quality are evident
- cleaning has not improved the overall print quality

IMPORTANT: Dispose of the empty ink cartridge in accordance with all federal, state and local laws.

1. Open the printer door.

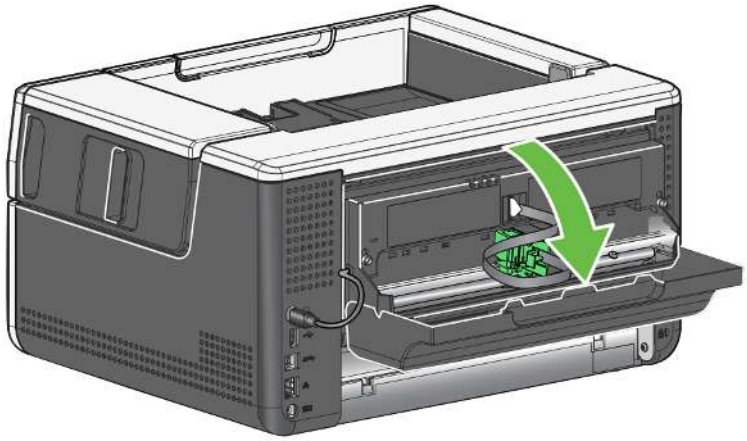

2. Open the ink cartridge package and remove the tab from the new ink cartridge.

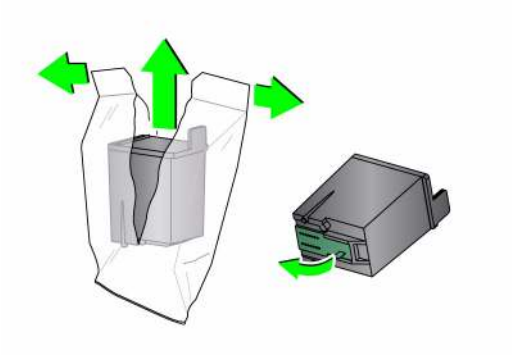

3. If the printer carrier is not in the “load” position, rotate it to the “load” position.

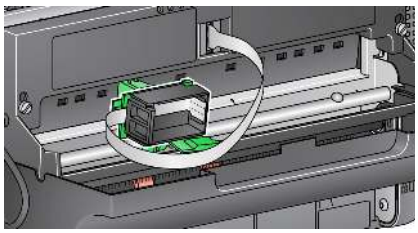

Load position

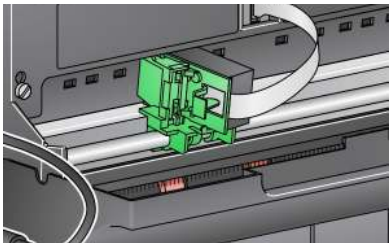

Printing position

4. Insert the ink cartridge into the printer carrier as shown.

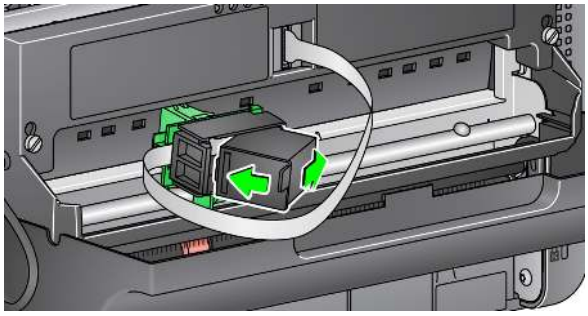

5. Press the green release tab and rotate the printer carrier to the “printing” position.

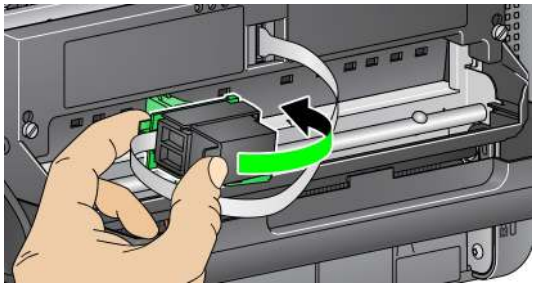

6. Slide the printer carrier into the desired print position. See “Changing print positions” on page 47.
7. Close the printer door.

   NOTE: If the printer door will not close, verify that the printer carrier is in the “printing” position.

Changing print positions

You will need to remove the printing location screw if you want to use 11 print positions. If you leave the screw in place, only 9 print positions will be available.

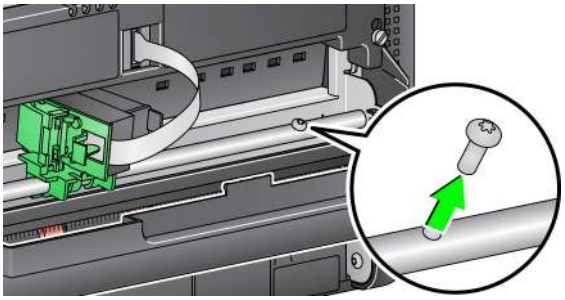

The horizontal print position must be changed manually.

1. Open the printer door.
2. Slide the printer carrier to the desired printing position.

   IMPORTANT: When changing print positions, it is important to verify that the printer carrier is securely in a printing (detent) position. When you slide the printer carrier into a printing position, you will be able to feel the printer carrier click into place.

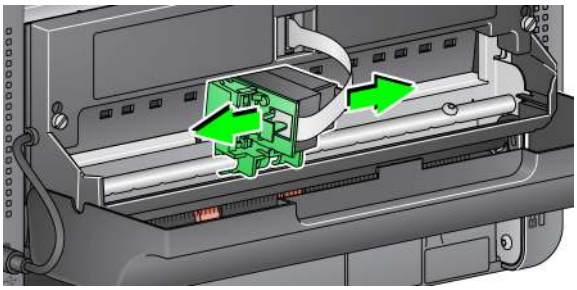

3. Close the printer door.

NOTE: The print location indicators at the edge of the transport can be used as a guide to verify your horizontal print position.

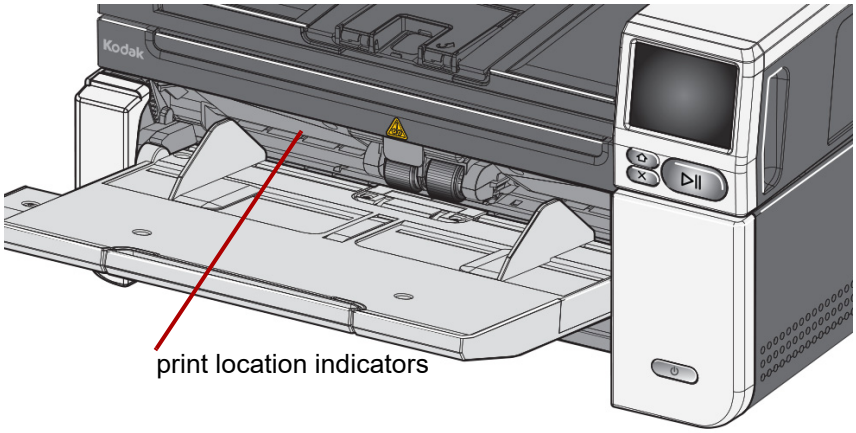

Problem solving

Use the list below as a guide to check possible solutions to problems you may encounter when using the printer.

Problem	Possible Solution
Print quality is poor or inconsistent	• Be sure the ink cartridge is not empty. • Be sure the ink cartridge is properly installed. • Be sure the ink cartridge is in the correct position for printing. • Verify that the printer has been enabled in the scanning application and that the expected print string has been specified. • Verify that all printer connectors are securely fastened and that the printer cable is securely attached. • Clean the print head (see “Printing problems when starting up due to dry print head” below).
Printing problems when starting up due to dry print head	Remove the ink cartridge from the printer carrier and using a lint free cloth or swab, dab (do not wipe) the ink jets on the ink cartridge, replace the ink cartridge and try again.
Not printing	• Be sure that printing is enabled in the scanning application. • Check to be sure that the ink cartridge/printer carrier is secure and in the desired print position. • Be sure the tape is removed from the print head. • Be sure the Printer Accessory is plugged in.
Ink is being sprayed on the back of the scanner	• Verify that the printer carrier is securely in a print position (see “Changing print positions” on page 47).
Printer door will not close	• Verify that the printer carrier is in the “printing” position. 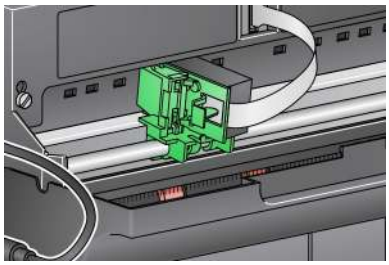

5 Maintenance

Chapter overview

This chapter describes the required cleaning and maintenance procedures for the *Kodak* S2085f/S3060/S3060f/S3100/S3100f/S3120 Scanner. The frequency of these procedures will vary with different scanning environments, paper types and image processing requirements. High volumes of scanning will demand more frequent cleaning of the scanner and more frequent replacement of consumables. Years of production scanning experience proves that properly cleaning and maintaining your scanner will result in scanning more paper in less time with less issues. A properly maintained *Kodak* S2085f/S3060/S3060f/S3100/S3100f/S3120 Scanner will provide years of trouble-free operation.

Scanner consumables (tires, pre-separation pads, etc.) and cleaning supplies are available for purchase from Kodak Alaris (see “Supplies and consumables” on page 60). Consumables are sold in kits. The kits contain the proper mix of tires, rollers, and pre-separation pads so you can easily replace them at the recommended rate. For example, only replacing the tires and never replacing the separation roller will eventually minimize scanner performance. Replacing the consumables at the recommended frequency will ensure the best performance.

Cleaning tools and materials

Use only these cleaning tools and materials when performing routine maintenance on your scanner. Use of any other cleaning materials could damage your scanner.

- *Kodak Digital Science* Transport Cleaning Sheets
- *Kodak* Roller Cleaning Pads
- Staticide wipes for *Kodak* Scanners
- A vacuum cleaner and tools

Optionally:

- Brillianize Detailer wipes
- Lint-free cloth

Opening the scanner cover

1. Power down the scanner.
2. Remove any documents from the input tray, output tray and transport.
3. Pull the scanner cover release latch forward. The scanner cover will open partially. Grasp the center of the top cover to fully open the cover for access to the internal components.

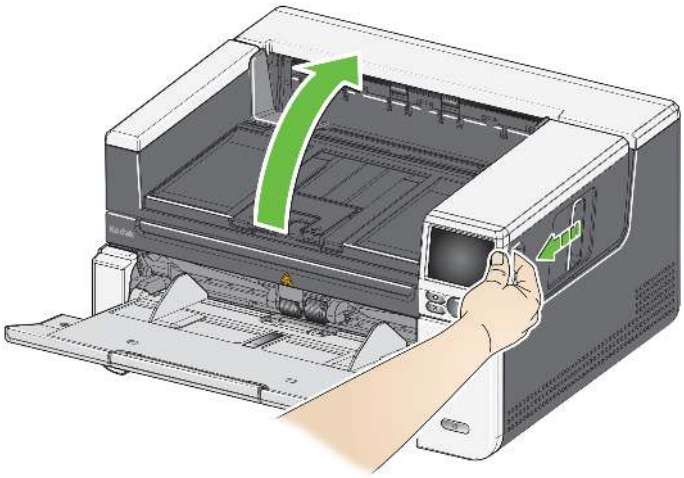

4. When finished cleaning the scanner or replacing a consumable, close the scanner cover with both hands.

Cleaning procedures

Cleaning your scanner and performing preventative maintenance on a regular basis is required to ensure the best possible image quality.

Some document types generate more paper dust and debris and may require more frequent cleaning.

Before cleaning your scanner or replacing consumables, review the following information:

- Some debris from the rubber tires on the feed module and separation roller is normal. Tire debris does not always mean that the tires are worn or damaged. After cleaning, inspect the tires for wear and replace the separation roller, feed module or tires if necessary.
- When cleaning rollers/tires, allow the rollers/tires to dry completely before scanning.
- Use only the recommended cleaning supplies. Using unapproved cleaning fluids or solvents may damage the rubber tires.
- Do not use cleaners in confined areas, use with adequate ventilation.
- Do not use cleaners on hot surfaces. Allow surfaces to cool to ambient temperature before cleaning.
- Do not use canned/compressed air. Use of compressed air may cause dust to be forced into the scanner's imaging system and lodge in an area that causes image quality issues and cannot be cleaned without Kodak Alaris Service personnel.
- Do not use flammable compressed aerosols on or around the scanner.
- In addition to the recommended cleaning supplies, you may use a vacuum cleaner to remove debris from the scanner.
- Do not allow any cleaning fluids to get into the Ultrasonic Sensors, see "Inside View" on page 6. If there is dust on the sensors, gently vacuum the sensors and surrounding area.
- Staticide wipes contain isopropanol which can cause eye irritation and dry skin. Wash your hands with soap and water after performing maintenance procedures. Refer to the Safety Data Sheet (SDS) for more information. The SDS is available on the Kodak Alaris website at www.AlarisWorld.com/go/ehs.

  NOTE: To access the SDS, you will need to provide the catalog number of the supply. See "Supplies and consumables" on page 60 for a link to the catalog.

Vacuuming the output tray, input elevator and transport area

1. Power down the scanner.
2. Thoroughly vacuum the output tray and input tray areas.
3. Open the scanner cover.
4. Thoroughly vacuum the transport area.

Cleaning the rollers

Cleaning the rollers includes all of the rollers in the transport area, the separation roller tires and the feed module tires.

1. Turn off the scanner and open the scanner cover.
2. Manually rotate and wipe the rollers with a roller cleaning pad.

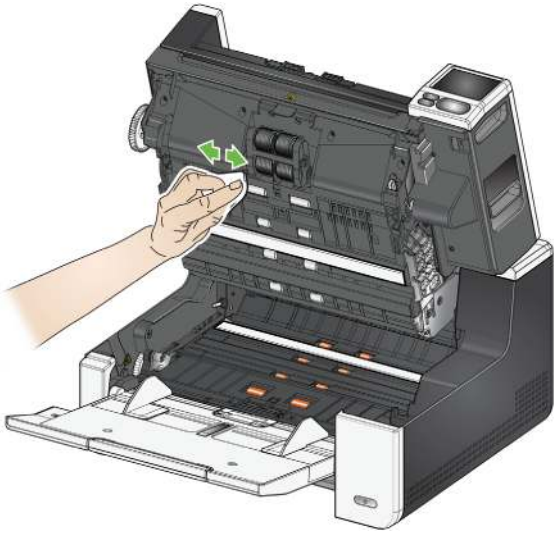

3. Dry the rollers with a lint-free cloth.

Cleaning the separation roller tires

4. Remove the pre-separation pad by lifting the pad up and out of position.
5. Remove the separation roller.

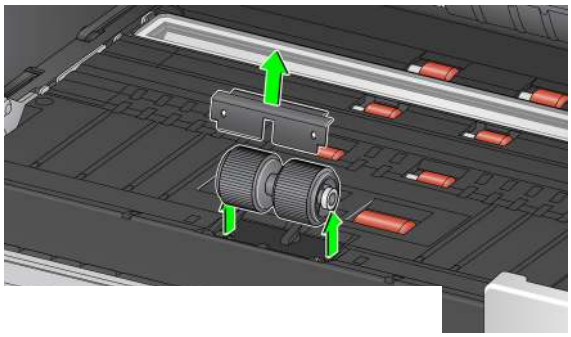

6. Manually rotate and wipe the separation roller tires with a roller cleaning pad. For best results wipe parallel to the ribs in order to remove any residue between the ribs.

7. Inspect the tires. If the tires show signs of wear or damage, replace the tires or the separation roller. See “Replacement procedures” on page 56.

8. Reinstall the separation roller by aligning the slots on the separation roller with the holders.
9. Reinstall the pre-separation pad. Be sure it snaps into place.

Cleaning the feed module tires

10. Clean the feed module tires by manually rotating and wiping the feed module tires with a roller cleaning pad. For best results wipe parallel to the ribs in order to remove any residue between the ribs. You do not need to remove the feed module to clean the tires.

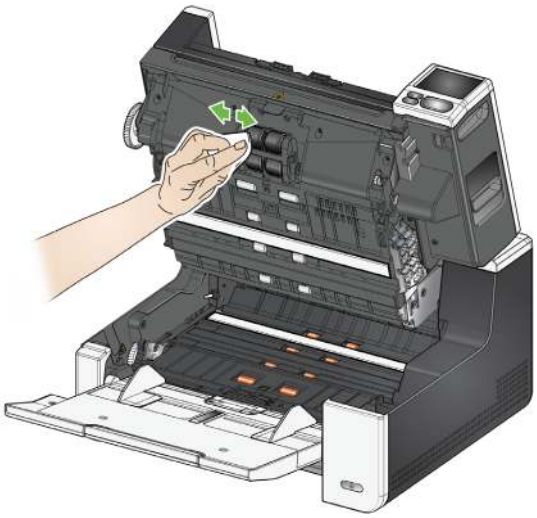

11. Inspect the tires. If the tires show signs of wear or damage, replace the feed module tires or the feed module. See “Replacement procedures” on page 56.

Cleaning the background strip(s)

12. Wipe the upper and lower background strips with a Staticide wipe or a Brillianize Detailer wipe.

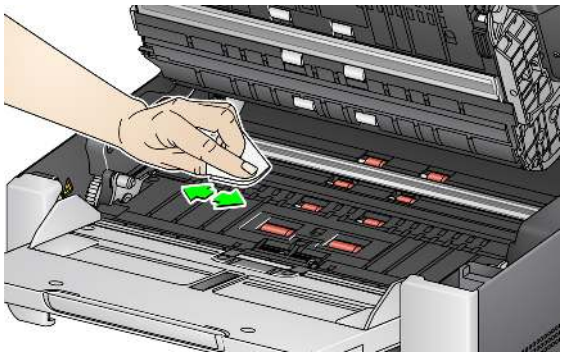

13. Wipe the upper and lower background strips again with an **almost-dry** Staticide wipe or a clean lint-free cloth to remove any streaks.

    IMPORTANT:Staticide wipes contain isopropanol which can cause eye irritation and dry skin. Wash your hands with soap and water after performing maintenance procedures. Refer to the MSDS for more information

Cleaning the CIS Imager

14. Wipe the upper and lower imaging area using a Brillianze Detailer wipe (Step 1) or Staticide wipe. Be careful not to scratch the imaging area when cleaning.

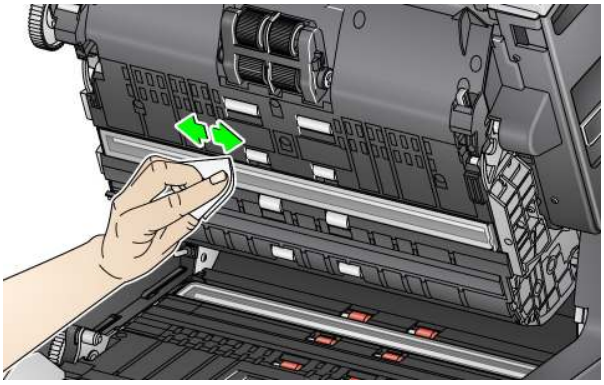

15. Wipe the upper and lower imaging area again using a Brillianize wipe (Step 2) or an almost dry Staticide wipe to remove any streaks.
16. Close the scanner cover.
17. When finished with all cleaning procedures, turn on the scanner.

Cleaning the flatbed glass *(S2085f/S3060f/S3100f Scanners only)*

The flatbed's glass platen can collect fingerprints and dust. Use Staticide Wipes for *Kodak* Scanners or Brillianize Detailer Wipes to clean the glass platen.

1. Open the flatbed cover.
2. Wipe the glass platen with a Brillianize wipe (Step 1) or Staticide wipe.

3. Dry the glass platen with a Brillianize wipe (Step 2) or almost dry Staticide wipe.
4. Close the flatbed cover.

IMPORTANT: Do not spray or pour cleaning liquids on the flatbed's glass platen, as these liquids may seep under the glass and cause damage.

Running a transport cleaning sheet

The transport should be cleaned with a Transport Cleaning Sheet fed several times.

1. Remove the wrapping from the Transport Cleaning Sheet.
2. Adjust the side guides to the widest position.
3. Place the transport cleaning sheet in the center of the input tray in landscape orientation with the adhesive side up.
4. Scan the transport cleaning sheet.
5. Remove the transport cleaning sheet from the output tray and place it in the center of the input tray in landscape orientation with the adhesive side down and rescan.
6. Steps 4 and 5 may need to be repeated a few times until all residue is removed.

NOTE: When the transport sheet gets dirty and/or loses its tackiness, discard it and use a new one.

Final cleaning steps

When finished running the transport cleaning sheet:

1. Open the scanner cover.
2. Wipe the exposed side of the upper and lower CIS Imagers with a lint-free cloth.
3. Close the scanner cover and scan a test image to ensure image quality.

Replacement procedures

For guidelines on how often to replace the feed module, feed tires, urging tires, separation roller module, separation roller tires, and pre-separation pads; refer to the support page for your scanner, and click on “Supplies.”

www.AlarisWorld.com/go/IMsupport

Replacing the feed module or feed module tires

1. Open the scanner cover.
2. Push the feed module release lever to the right and release the feed module.

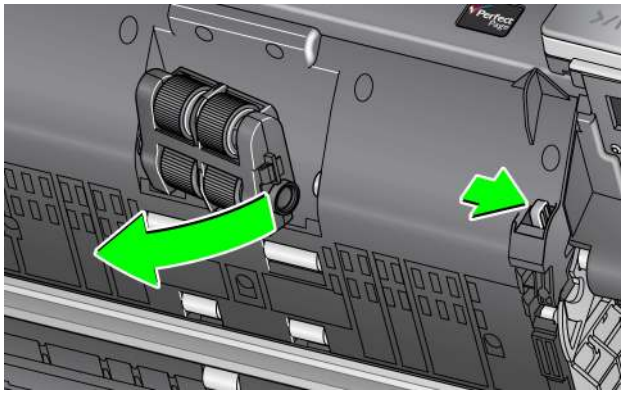

3. If you are just replacing the feed module, go to Step 10. If you are replacing the tires, proceed with Step 4.
4. With one hand, press the locking tabs (one on each side) while holding the lower housing with the other hand. Pull the upper housing up and away from the rollers.

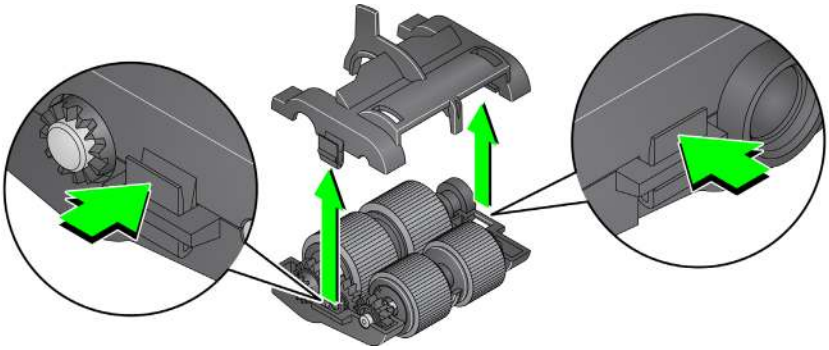

5. Remove both core assemblies.
6. Replace each tire by sliding the tire off the core.

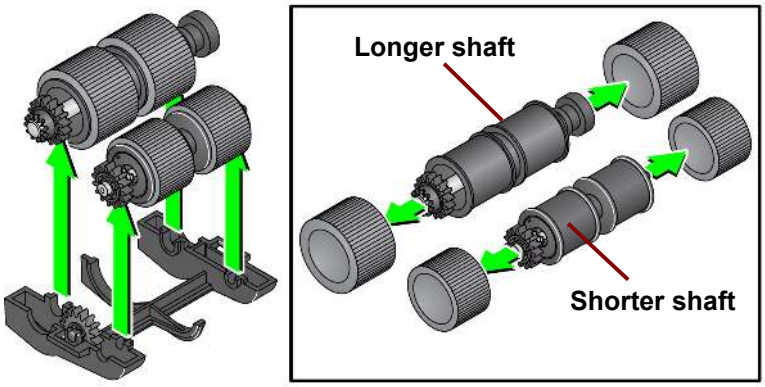

7. Install each new tire by gently pulling it over the core. The tires do not need to be installed in any specific orientation.

   NOTE: When changing tires, be sure to put the larger tires on the longer shaft and the smaller tires on the shorter shaft.

   IMPORTANT:Do not overstretch the tire; it may tear.

8. Replace each core assembly in the lower feed module housing and align the tabs on the upper housing with the slots on the lower housing.

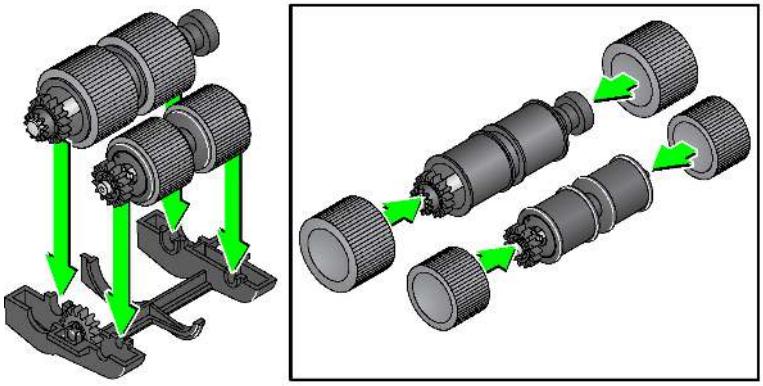

9. Press the upper and lower housings together until they snap into place.
10. Push the feed module release lever to the right and insert the feed module into position. Be sure the ends align and then release the feed module release lever. Verify that the feed module is securely in place.

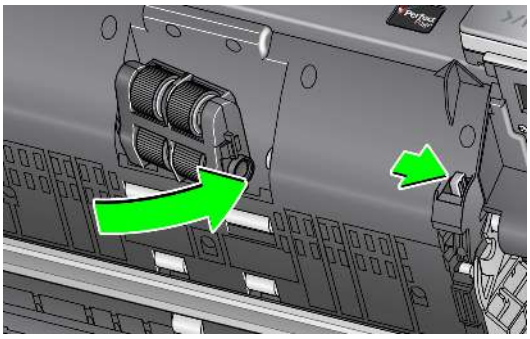

11. Close the scanner cover.

Replacing the separation roller

1. Open the scanner cover.
2. Remove the pre-separation pad by lifting the pad up and out of position; then remove the separation roller.
3. Insert the new separation roller. Be sure to line up the slots on the separation roller with the holders.

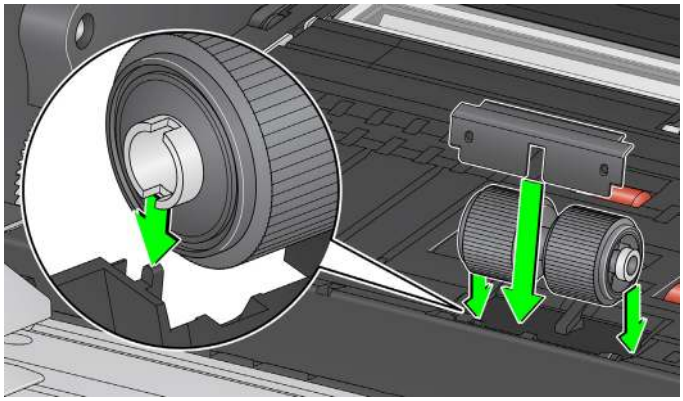

4. Reinstall the pre-separation pad. Be sure it snaps into place.

   NOTE: It is recommended that you replace the pre-separation pad every time you replace the separation roller or separation tires.

5. Close the scanner cover.

Replacing the separation roller tires

1. Open the scanner cover.
2. Remove the pre-separation pad by lifting the pad up and out of position; then remove the separation roller.

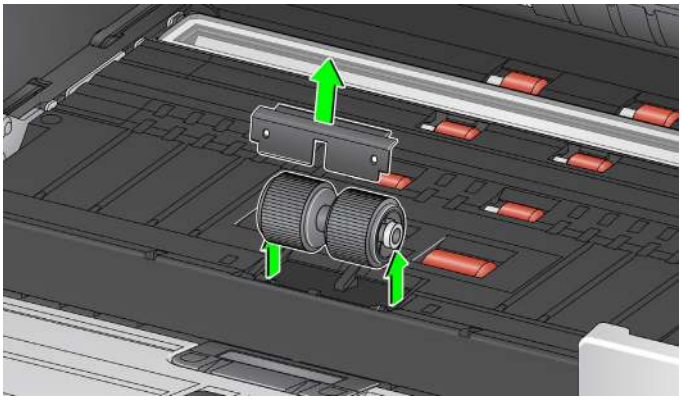

3. Replace each tire by sliding the tire off the core.
4. Install each new tire by gently pulling it over the core.

   IMPORTANT: Do not overstretch the tire; it may tear.

5. Reinstall the separation roller. Be sure to line up the slots on the separation roller with the holders.
6. Reinstall the pre-separation pad. Be sure it snaps into place.

   NOTE: It is recommended that you replace the pre-separation pad every time you replace the separation roller or separation tires.

7. Close the scanner cover.

Replacing the pre-separation pad

Change the pre-separation pad when the frequency of multi-fed documents increases.

1. Open the scanner cover.
2. Remove the pre-separation pad by lifting the pad up and out of position.

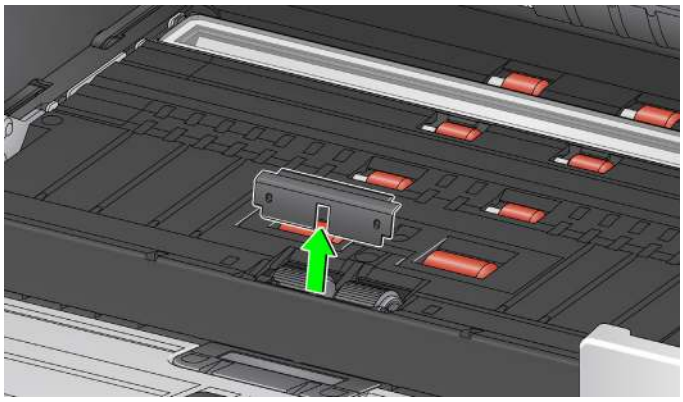

3. Install the new pre-separation pad. Be sure it snaps into place.
4. Close the scanner cover.

Replacing the flatbed background *(S2085f/S3060f/S3100f Scanners only)*

Replace the flatbed background when it is damaged or very dirty. If you are experiencing cropping issues, inspect the background and replace it if necessary.

NOTE: Handle the flatbed background with care during replacement.

1. Open the flatbed cover.
2. Using a Phillips head screwdriver, loosen and remove the four screws which hold the flatbed background in place.

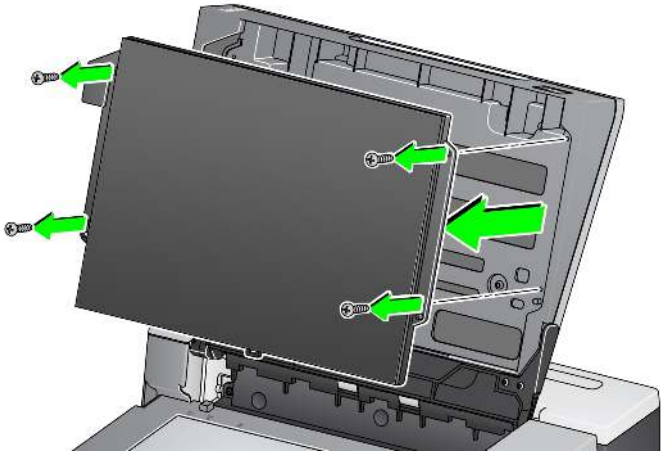

3. Align the new flatbed and insert and tighten the screws until the flatbed background is secure.Supplies and consumables

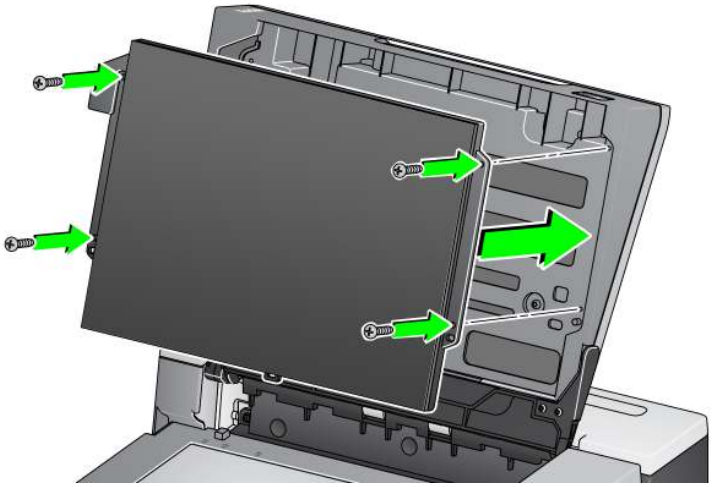

Supplies and consumables

Contact your scanner supplier to order supplies. For a full list of scanner cleaning supplies, consumables, accessories,
and maintenance guidelines; refer to the support page for your scanner (below) and click on “Supplies.”

www.AlarisWorld.com/go/IMsupport

6 Troubleshooting

Scanner error indicators

A blinking power button indicates a scanner error or alert condition, which will be displayed on the scanner screen. A yellow alert needs your attention, e.g. if the scanner cover is open. A red alert is a critical error. If you can not correct the problem by following the guidance on the scanner screen, you may need to power-cycle the scanner. If the problem persists, call Technical Support.

NOTE: A slowly blinking power button with a blank scanner screen indicates the scanner is in low power mode. An error situation has a faster blink of the power button.

Problem solving

If your scanner does not function as you expect, this section may help you resolve the situation.

Scanner exception handling

The following user correctable error conditions will be reported on the scanner screen and will remain until you correct them:

- Paper jam — open the scanner cover and remove the jammed pages (see “Opening the scanner cover” on page 50).
- Multifeed — open the scanner cover and removed the multifed pages. Choose one of the options presented on the scanner screen.
- Cover opened — close the scanner cover.
- Document protection warning — open the scanner cover and remove the page that caused the warning. If necessary to protect the page, use a document sleeve or scan on an attached flatbed. Otherwise replace the page in the input tray, adjust scanner settings as needed, and resume scanning.

Self help for problems

Use the chart below as a guide for possible solutions to problems you may encounter when using the *Kodak* S2085f/S3060/S3060f/S3100/S3100f/S3120 Scanner.

Problem	Possible Solution
Documents are jamming or multiple documents are feeding	Make sure that: • all documents meet specifications for size, weight, and type, etc. as outlined in Appendix A, *Specifications*. • all staples and paper clips have been removed from the documents. • all rollers and tires are clean and the separation roller and feed module are properly installed. See the procedures in “5 Maintenance” on page 49. **To remove a document jam:** • Remove any documents from the feeder area. • Open the scanner cover. • Locate the jammed document(s) and remove it. • Close the scanner cover and resume scanning.
“Document Jam” is displayed on the scanner screen and paper is stopping in the transport, but is not jamming.	• Verify that the *Document Management:* **Maximum Length** option on the Device-General tab (TWAIN Datasource) or the **Longest Document** option on the Scanner tab (ISIS Driver) is set to longer than the longest document being scanned. The default is 17 inches / 43.2 cm. • The driver settings (Resolution, Compression, Bit depth) may result in the image being larger than the scanner memory. Adjust settings as needed.
The scanner will not scan/ feed documents	Make sure that: • the power cord is plugged in and the power is on. • the power button has been pushed on and the green LED is lit. • the scanner cover is completely closed. • documents are making contact with the feed module and are covering the paper present sensor. • documents meet specifications for size, weight, and type, etc. • for thicker documents, turn the gap release dial vertically to open the space between the feed module and separation module. • for curled, wrinkled, perforated, or slippery documents, try engaging the feeder adjustment tab (for more information see “6 Feeder adjustment tab” onpage 3). • you check the feed module and separation roller for signs of wear, and replace these parts if necessary. You can also power the scanner down and power it up again.
Image quality is poor or has decreased	Make sure that the scanner and CIS Imagers are clean. Refer to “5 Maintenance” on page 49.
No images are being displayed	If you are scanning one-sided pages, be sure the side you want to scan is facing the right way — for front side scanning, face up; for back side scanning, face down.
11 inches / 27.94 cm or longer documents are not feeding or are jamming	Make sure the input and output tray extenders are pulled out to provide support for long documents.

Problem	Possible Solution
Scanner is running slow	• Your PC may not meet the minimum requirements for the scanner. • Disable any anti-virus or security suite software. If the problem resolves, consult the anti-virus or security suite software documentation for how to use exceptions or exclusions and add the Kodak folders. • Some image processing functions will reduce scanner speed. • Resolution (dpi) setting may be set too high. • Your virus software may be scanning all TIFF or JPEG files. • Ensure you are scanning to a local drive.
Documents are skewed during scanning	Make sure that: • the input tray side guides are adjusted to fit the documents being fed. • documents are being fed perpendicular to the feed module. • all staples and paper clips have been removed from the documents. • the feed module, separation roller, and drive rollers are clean. • the scanner cover is firmly closed.
Scanner pauses excessively during scanning	Make sure that: • the host computer meets minimum requirements for scanning. • there is enough free space on the hard disk drive. • all other applications are closed. • you are using a USB 2.0 (or higher) connection. You can also try changing the scanning options (compression, etc.) in your scanning application.
Roller marks or streaks appear on documents after scanning	Clean the feed module, transport rollers and separation roller and tires. Refer to “5 Maintenance” on page 49.
Vertical lines appear on the image	• Clean the CIS Imagers. Refer to “5 Maintenance” on page 49. • Enable the **Streak Filter** option or increase the aggressiveness.

Problem	Possible Solution
Documents are multifeeding	Make sure that: • the leading edges of all batched documents are centered in the feeder so that each document will come in contact with the feed rollers. • the feed module and separation roller are clean and not worn. • documents with an unusual texture or surface are fed manually. • the gap release is not in the vertical position.
“False paper jams or multifeeds are occurring	• Make sure that the transport area is clean. • Decrease the sensitivity setting for the *multifeed* and *Intelligent Document Protection* in the scanning application. NOTE: If condition continues, see “Perform a Multifeed Calibration” on page 65.
A misfeed occurs when you are scanning, and Interactive Multifeed Recovery is enabled in your scanner driver	Scanning will be paused and this screen will be displayed. To recover, follow these steps. 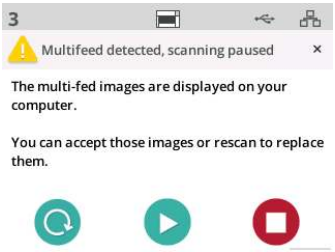 1. Look at the images on your PC. If the image is acceptable, touch the start/resume button to accept the image(s) and continue scanning. 2. If the image is not acceptable: - Touch the stop button to reject the image and suspend scanning, or • Touch the button to reject the image(s) and continue scanning.

Problem	Possible Solution
Scanner is not indicating multifeeds or indicates repeated false multifeeds	Perform a Multifeed Calibration. From the scanner display ready screen, press the button to display the *Settings* menu. • Press the *Diagnostics* option. 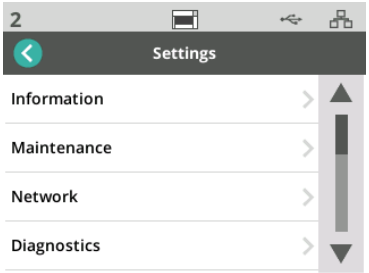 • Press the *Multifeed Calibration* option: 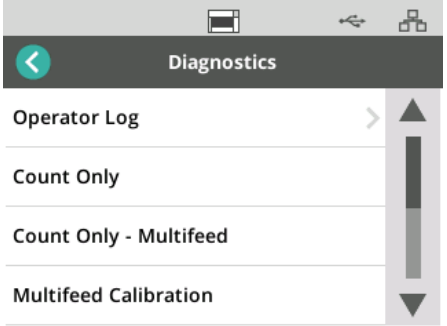 • The scanner will prompt you to place a sheet of paper in the input tray. Use an A4 size 75-80 g/m2 or Letter size 20 lb. bond paper in the portrait orientation. • Press the Play button to start the Multifeed Calibration. 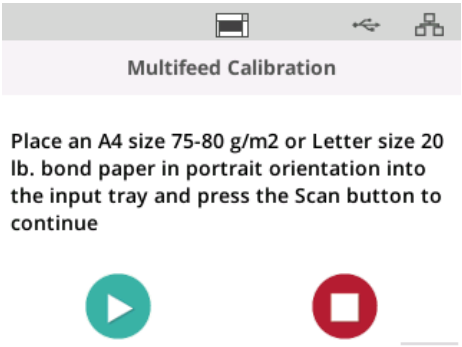 • When a successful calibration has completed, the screen below will be displayed. 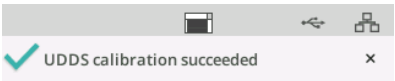 • If the Multifeed Calibration is not successful, contact service.

Upgrading software

Kodak Alaris frequently updates drivers and firmware to correct issues and add new features. If you are experiencing repeated error messages, for example, you should upgrade to the latest driver before contacting Service. Go to: www.AlarisWorld.com/go/IMsupport,, access **S2000f/S3000 Drivers & software** and download the most recent upgrade.

Contacting Service

1. Visit www.AlarisWorld.com/go/IMsupport to obtain the most current phone number for your country.
2. When calling, please have the following information ready:
   - A description of your problem.
   - The scanner model and serial number.
   - Computer configuration.
   - Scanning application you are using.

Appendix A Regulatory Information

Environmental information

- The *Kodak* S2085f/S3060/S3060f/S3100/S3100f/S3120 Scanner is designed to meet worldwide environmental requirements.
- Disposal of this equipment may be regulated due to environmental considerations. For disposal or recycling information, contact your local authorities or, in the USA, visit: www.alarisworld.com/go/scannerrecycling.
- Perchlorate Material: The coin cell battery in this product may contain perchlorate material – in California, special handling may apply; visit www.dtsc.ca.gov/hazardous waste/perchlorate.
- Guidelines are available for the disposal of consumable items that are replaced during maintenance or service; follow local regulations or contact Kodak Alaris locally for more information.
- The product packaging is recyclable.
- *Kodak* S2085f/S3060/S3060f/S3100/S3100f/S3120 Scanners are Energy Star compliant and shipped from the factory with the default time set to 15 minutes.

European Union

This symbol indicates that when the last user wishes to discard this product, it must be sent to appropriate facilities for recovery and recycling. Please contact your local Kodak Alaris representative or refer to www.kodakalaris.com/go/recycle for additional information on the collection and recovery programs available for this product.

Please consult www.kodakalaris.com/go/REACH for information about the presence of substances included on the candidate list according to article 59(1) of Regulation (EC) No. 1907/2006 (REACH).

Product Disclosure Table - *Kodak* S2085f/S3060/S3060f/S3100/S3100f/S3120 Scanners

有毒有害物质或元素名称及含量标识表

Table of hazardous substances' name and concentration

部件名称 **Component name**	有毒有害物质或元素 **hazardous substances' name**					
	铅 **(Pb)**	汞 **(Hg)**	镉 **(Cd)**	六价铬 **(Cr6+)**	多溴联苯 **(PBB)**	多溴二苯醚 **(PBDE)**
适配器 (AC Adapter)	**X**	**O**	**O**	**O**	**O**	**O**
电路板 Circuit Board	**X**	**O**	**O**	**O**	**O**	**O**

O: 该有毒有害物质在该部件所有均质材料中的含量均在 S J/T 11363-2006 规定的限量要求以下。

X: 该有毒有害物质至少在该部件的某一均质材料中的含量超出 SJ/T 11363-2006 规定的限量要求。

O: indicates hazardous substance concentration lower than MCV

X: indicates hazardous substance concentration higher than MCV

环保使用期限 (EPUP)

在中国大陆，该值表示电子信息产品中含有的有毒有害物质或元素在正常使用的条件下不会发生外泄或突变，用户使用此产品不会对环境造成严重污染或对人身、财产造成严重损害的期限 （以年计）。
该值根据操作说明中所规定的产品正常使用条件而定

Environmental Protection Use Period (EPUP)

In mainland China, this number indicates the time period (calculated by year) within which any hazardous substances present in the product are not expected to be released such that there is risk to human health, property, or the environment.

This value is assigned based on normal use of the product as described in the operating instructions.

Taiwan:

設備名稱：掃描器 Equipment name	型號（型式）： Type designation (Type)	*Kodak* S2085f Scanner / *Kodak* S3060 Scanner / *Kodak* S3060f Scanner / *Kodak* S3100 Scanner / *Kodak* S3100f Scanner / *Kodak* S3120 Scanner				
單元Unit	限用物質及其化學符號 Restricted substances and their chemical symbols					
	鉛 Lead (Pb)	汞 Mercury (Hg)	鎘 Cadmium (Cd)	六價鉻 Hexavalent chromium (Cr^{+6})	多溴聯苯 Polybrominated biphenyls (PBB)	多溴二苯醚 Polybrominated diphenyl ethers (PBDE)
AC適配器 AC Adapter	—	○	○	○	○	○
離合器 Clutch	—	○	○	○	○	○
內存模塊 Motor	—	○	○	○	○	○
鏡片 Lens	—	○	○	○	○	○
電阻 Resistor	—	○	○	○	○	○
壓鑄框架 Die Cast Frame	—	○	○	○	○	○
電路板組件 Circuit Board Assembly	—	○	○	○	○	○
輸入/輸出托盤 Input/Output Trays	○	○	○	○	○	○
塑料蓋和零件 Plastic Covers and Parts	○	○	○	○	○	○
控制面板 Control Panel	○	○	○	○	○	○
傳感器 Sensors	○	○	○	○	○	○
進料和分離模塊 Feed and Separation Modules	○	○	○	○	○	○
紙張傳感器 Paper Sensors	○	○	○	○	○	○
端口 Ports	○	○	○	○	○	○
打印機附件 Printer Accessory	○	○	○	○	○	○

備考1.〝超出0.1 wt %〞及〝超出0.01 wt %〞係指限用物質之百分比含量超出百分比含量基準值。

Note 1: “Exceeding 0.1 wt %” and “exceeding 0.01 wt %” indicate that the percentage content of the restricted substance exceeds the reference percentage value of presence condition.

備考2.〝〇〞係指該項限用物質之百分比含量未超出百分比含量基準值。

Note 2: “〇” indicates that the percentage content of the restricted substance does not exceed the percentage of reference value of presence.

備考3.〝—〞係指該項限用物質為排除項目。

Note 3: The “–” indicates that the restricted substance corresponds to the exemption.

EMC statements

United States: This equipment has been tested and found to comply with the limits for a Class B digital device pursuant to Part 15 of the FCC rules. These limits are designed to provide reasonable protection against harmful interference in a residential installation. This equipment generates, uses, and can radiate radio frequency energy and, if not installed and used in accordance with the instruction manual, may cause harmful interference to radio communications. However, there is no guarantee that interference will not occur in a particular installation. If this equipment does cause harmful interference to radio or television reception, which can be determined by turning the equipment off and on, the user is encouraged to try to correct the interference by one or more of the following measures:

- Reorient or relocate the receiving antenna.
- Increase the separation between the equipment and receiver.
- Connect the equipment into an outlet on a circuit different from that to which the receiver is connected.
- Consult the dealer or an experienced radio/TV technician for additional suggestions.

Any changes or modifications not expressly approved by the party responsible for compliance could void the user’s authority to operate the equipment. Where shielded interface cables have been provided with the product or specified additional components or accessories elsewhere defined to be used with the installation of the product, they must be used in order to ensure compliance with FCC regulation.

Korea: As this equipment has obtained EMC registration for household use, it can be used in an area including residential areas.

이 기기는 가정용으로 전자파적합등록을 한 기기로서 주거지역에서는 물론 모든 지역에서 사용할 수 있습니다.

Japan: This is a Class B product based on the standard of the Voluntary Control Council for interference by information Technology Equipment (VCCI). If this is used near a radio or television receiver in a domestic environment, it may cause radio interference. Install and use the equipment according to the instruction manual.

この装置は、情報処理装置等電波障害自主規制協議会（ＶＣＣＩ）の基準に基づくクラスＢ情報技術装置です。この装置は、家庭環境で使用することを目的としていますが、この装置がラジオやテレビジョン受信機に近接して使用されると、受信障害を引き起こすことがあります。
取扱説明書に従って正しい取り扱いをして下さい。

Appendix B Warranty - US and Canada only

Congratulations on the purchase of an Alaris Scanner. Alaris Scanners are designed to provide end users with the highest performance and reliability. All Alaris Scanners are covered by the following Limited Warranty.

Limited Warranty for Alaris Scanners

Kodak Alaris Inc. provides the following Limited Warranty on Alaris Scanners (excluding spare parts and consumables) distributed by Kodak Alaris or through Kodak Alaris' authorized distribution channels:

Kodak Alaris Inc. warrants that an Alaris Scanner, from the time of sale through the Limited Warranty period applicable to the Product, will be free of defects in materials or workmanship and will conform to the performance specifications applicable for the particular Alaris Scanner.

All Alaris Scanners are subject to the Warranty Exclusions described below. An Alaris Scanner found to be defective or which does not conform to the product specifications will be repaired or replaced with new or refurbished product at Kodak Alaris' option.

Purchasers may determine the applicable Limited Warranty period for the Alaris Scanners purchased by visiting www.AlarisWorld.com/go/imsupport.

Proof of purchase is required to demonstrate eligibility for warranty service.

Warranty exclusions

Kodak Alaris' Limited Warranty does not apply to an Alaris Scanner that has been subjected to physical damage after purchase, caused, for example, by casualty, accident, acts of God or transportation, including (a) by a failure to properly package and ship the Scanner back to Kodak Alaris for warranty service in accordance with Kodak Alaris' then current Packaging and Shipping Guidelines, including failure to replace the shipping restraint prior to shipping, or by a failure to remove the shipping restraint prior to use; (b) resulting from the user's installation, system integration, programming, re-installation of user operating systems or applications software, systems engineering, relocation, reconstruction of data, or removal of the product or any component (including breakage of a connector, cover, glass, pins, trays or seal); (c) from service, modification or repair not performed by Kodak Alaris or a service provider authorized by Kodak Alaris or by tampering, use of counterfeit or other non-Kodak Alaris components, assemblies, accessories, or modules; (d) by misuse, unreasonable handling or maintenance, mistreatment, operator error, failure to provide proper supervision or maintenance, including use of cleaning products or other accessories not approved by Kodak Alaris or use in contravention of recommended procedures or specifications; (e) by environmental conditions (such as excessive heat or other unsuitable physical operating environment), corrosion, staining, electrical work external to the product or failure to provide electro-static discharge (ESD) protection; (f) by failure to install firmware updates or releases available for the product and (g) by such other supplemental exclusions published from time to time online at www.AlarisWorld.com/go/imsupport.

Kodak Alaris provides no Limited Warranty for products purchased from countries other than the United State and Canada. Purchasers of products from foreign distribution channels must seek warranty coverage, if any, through the original source of purchase.

Kodak Alaris provides no Limited Warranty for products that are purchased as part of a third party manufacturer's product, computer system or other electronic device.

Any warranty for these products is provided by the OEM (Original Equipment Manufacturer) as part of that manufacturer's product or system.

The replacement product assumes the remainder of the Limited Warranty period applicable to the defective product or thirty (30) days, whichever is longer.

Installation Warning and Disclaimer

KODAK ALARIS WILL NOT BE RESPONSIBLE FOR ANY CONSEQUENTIAL OR INCIDENTAL DAMAGES RESULTING FROM THE SALE, INSTALLATION, USE, SERVICING OR IMPROPER FUNCTIONING OF THIS PRODUCT, REGARDLESS OF THE CAUSE. SUCH DAMAGES FOR WHICH KODAK ALARIS WILL NOT BE RESPONSIBLE, INCLUDE, BUT ARE NOT LIMITED TO, LOSS OF REVENUE OR PROFIT, LOSS OF DATA, DOWNTIME COSTS, LOSS OF USE OF THE PRODUCT, COST OF ANY SUBSTITUTE PRODUCT, FACILITIES OR SERVICES OR CLAIMS OF CUSTOMERS FOR SUCH DAMAGES.

If there is any conflict between other sections of this appendix and the Limited Warranty, the terms of the Limited Warranty prevail.

How to obtain Limited Warranty service

Alaris Scanners are supplied with information on unpacking, setup, installation and operation. Careful reading of the User's Guide will answer most of the technical questions the end user might have regarding proper installation, operation and maintenance of the product. However, should additional technical support be required, you may visit our website at: www.AlarisWorld.com/go/imsupport or contact: Kodak Alaris' Response Center: **(800) 822-1414**

The Response Center is available Monday – Friday (excluding Kodak Alaris holidays) 8 a.m. to 5 p.m. EST.

Before placing the call, the eligible purchaser should have the Alaris Scanner model number, part number, serial number and proof of purchase available. The eligible purchaser should also be prepared to provide a description of the problem.

Response Center personnel will assist the end user in resolving the problem over the phone. The end user may be asked to run some simple, self-diagnostic tests and report the resulting status and error code messages. This will assist the Response Center in determining if the problem is the Alaris Scanner or another component and if the problem can be resolved over the phone. If the Response Center determines a hardware problem exists that is covered either under the Limited Warranty or a purchased Maintenance Agreement, a Return Material Authorization Number (RMA) will be assigned as needed, a service request will be initiated and repair or replacement procedures will follow.

Packaging and shipping guidelines

Purchaser must ship all warranty returns in a method that guarantees full protection of the product from shipping damage. Failure to do so will void the Alaris Scanner warranty. Kodak Alaris advises the purchaser to keep the original box and packing materials for storing or shipping. Kodak Alaris is not responsible for issues related to shipping damage. The purchaser must return only the Alaris Scanner. Prior to shipment, purchaser must remove and retain all “add-on” items, (i.e. adapters, cables, software, manuals, etc.). Kodak Alaris accepts no responsibility for these items and they will not be returned with the repaired or replacement Alaris Scanner. All products should be returned to Kodak Alaris in the original shipping container, or an authorized packaging box for the units being returned. Purchaser must install the shipping restraint before the Alaris Scanner is shipped. When the original packaging is not available, contact Kodak Alaris’ Response Center at (800) 822-1414 for part numbers and replacement packaging ordering information.

Return procedure

Eligible purchasers seeking services for Alaris Scanners covered under this Limited Warranty must obtain a Return Material Authorization Number (“RMA”) by calling (800) 822-1414 and within ten (10) business days from the date of issuance of the RMA must return the Alaris Scanner to the address designated in the RMA at the end user’s own expense and risk, in compliance with Kodak Alaris’ current Packaging and Shipping Guidelines.

Any defective products or parts replaced by Kodak Alaris become the property of Kodak Alaris.

Customer responsibility

BY REQUESTING SERVICE, THE ELIGIBLE PURCHASER ACKNOWLEDGES THE TERMS OF THE LIMITED WARRANTY, INCLUDING THE DISCLAIMER AND LIMITATION OF LIABILITY PROVISIONS. PRIOR TO SEEKING SERVICE, THE END USER MUST BACK-UP ANY DATA OR FILES THAT MAY BECOME DAMAGED OR LOST. KODAK ALARIS IS, WITHOUT LIMITATION, NOT RESPONSIBLE FOR LOST OR DAMAGED DATA OR FILES.

Warranty Service descriptions

Kodak Alaris offers a range of service programs to support its Limited Warranty and to assist with the use and care of the Alaris Scanner (“Service Methods”). An Alaris Scanner represents an important investment. Alaris Scanners provide the productivity needed to stay competitive. The sudden loss of this productivity, even temporarily, could seriously affect the ability to meet commitments. Downtime can be very expensive, not just in the cost of the repair but also in time lost. To help alleviate these problems, Kodak Alaris may use one of the service methods listed below, depending upon product type, in providing service under its Limited Warranty.

Information about the product, including warranty, service program information, and restrictions, can be obtained online at

www.AlarisWorld.com/go/imsupport.

To avoid service delays, Kodak Alaris urges end users to complete the Limited Warranty Registration process online at www.AlarisWorld.com/go/imsupport.

Product model and product serial number are required to complete the registration process.

Kodak Alaris also provides a variety of service programs that may be purchased to assist with the use and care of the Alaris Scanner.

Kodak Alaris is committed to providing its customers with quality, performance, reliability and service under the Limited Warranty.

We expect to have a supply of spare parts and consumables for at least 5 years after product manufacture has been discontinued.

Advanced Unit Replacement (AUR)

AUR may be one of the easiest and most comprehensive service offerings in the industry. In the unlikely event of a product defect, for eligible purchases of certain *Kodak* scanners, Kodak Alaris will replace that product within two business days.

The AUR provides advance replacement on specific failed or broken *Kodak* scanners. If Kodak Alaris determines a product is not operating consistently within manufacturer's specifications, Kodak Alaris will provide next day AUR subject to availability of courier service. The replacement product will perform at the minimum specifications of the current product but may not be the exact make and model. The replacement product may be a refurbished unit. When AUR support is necessary, Kodak Alaris will ship the replacement unit to Customer's location, transportation prepaid. Upon delivery of a replacement unit, Customer must remove all options and accessories (which include power cord, documentation, etc.) that are not covered by the Limited Warranty, then place the entire malfunctioning unit in the shipping case, apply the enclosed labels and call the carrier for pickup within 5 business days after receiving the AUR. Kodak Alaris will pay the return transportation charges. If parts are missing from the returned unit, Customer may be charged for the parts at prevailing per call rates. If the Customer has not returned the malfunctioning unit within 10 business days, Customer will be invoiced the list price of the unit and becomes responsible for such charge.

Depot service

If the Alaris Scanner is not eligible for AUR or On-Site Service, an eligible purchaser may utilize our Depot Repair Service. The eligible purchaser will be instructed to ship the product to the nearest authorized Depot Repair Center. Product must be shipped at the eligible purchaser's risk and expense to the repair center. Before the product is returned to the repair center, be sure to remove all options and accessories (which include power cord, documentation, etc.) not covered by the Limited Warranty. All products should be returned to Kodak Alaris in the original shipping container, or in a recommended packing box. The Alaris Scanner must have the shipping restraint installed before it is shipped. When the original packaging is not available, contact Kodak Alaris' Response Center at (800) 822-1414, for ordering information. Eligible purchasers seeking services for Alaris Scanners must obtain a Return Material Authorization number ("RMA") by calling (800) 822-1414, and within ten (10) business days from the date of issuance of the RMA must return the Alaris Scanner to the address designated in the RMA at the end user's own expense and risk. The Return Material Authorization Number ("RMA") must be clearly marked on the outside of the box to ensure proper receipt and credit of the defective product.

Upon receipt of the product, the repair center will repair product within ten (10) business days. The repaired product will be shipped back two-day express mail at no expense to the eligible purchaser.

Important restrictions

Eligibility: The Advance Exchange Program and the Depot Repair Service are available to eligible purchasers in the fifty (50) United States for products purchased from authorized distributors of Kodak Alaris. The Alaris Scanner will be ineligible for any service under warranty if the product falls under any of Kodak Alaris' then-current Warranty Exclusions, including a purchaser's failure to return defective products to Kodak Alaris in compliance with Kodak Alaris' then current Packaging and Shipping Guidelines. Persons are only considered "eligible purchasers" or "end users" if they originally purchased the Alaris Scanner for their own personal or business use, and not for resale.

Consumables: Consumables are items that wear out under normal use and must be replaced by the end user as needed. Consumables, supplies, other expendable items and those items identified as being the user's responsibility in the User's Guide are not covered under the Limited Warranty.

Any defective products or parts replaced by Kodak Alaris become the property of Kodak Alaris.

Contacting Kodak Alaris

For Information on Alaris Scanners:

Website: www.AlarisWorld.com/go/IM

For U.S. contact Technical Support by telephone:

Telephone technical support is available Monday-Friday between the hours of 5 a.m. to 5 p.m. excluding Kodak Alaris holidays.
Phone: (800) 822-1414

For technical documentation and FAQs available 24 hours a day:

Website: www.AlarisWorld.com/go/IM

For Service Program information

Website: www.AlarisWorld.com
Phone: (800) 822-1414

All trademarks and trade names used are the property of their respective holders.

The Kodak trademark and trade dress are used under license from Eastman Kodak Company.

© 2019 Kodak Alaris Inc.
TM/MC/MR: Alaris