B-TECH AUDIO VIDEO MOUNTS

B-TECH AV MOUNTS

CHOICE OF FOUR POLE LENGTHS

BT8424

UNIVERSAL FLAT SCREEN CEILING MOUNT WITH TILT

Designed to ceiling mount screens up to 50kg in either landscape or portrait orientation, the BT8424 is available in a choice of four different drop lengths; 1m, 1.5m, 2m and 3m. The mount uses B-Tech's unique 'Torsion-Tilt' mechanism for easy tilt up to +/-15°. Levelling screws are included on the interface arms to finely adjust the screen height and locking screws help prevent unauthorised removal of the screen. Cover plates are supplied for a neat and tidy installation.

SPECIFICATION

Recommended screen size	39" - 65"
Max load	50kg
VESA® compatibility (as standard)	up to 400 x 400
VESA® compatibility (with included adaptors)	up to 600 x 400
Tilt adjustment	+/-15°
Ceiling drop	1003mm, 1503mm, 2003mm or 3003mm*
Colour (interface)	Black
Colour (poles)	Black or Chrome

From the ceiling to the centre of the mount

FEATURES

- Unique 'Torsion-Tilt' mechanism for easy tilt adjustment
- Post installation screen alignment for perfect screen positioning
- Arms feature levelling screws to adjust the screen height
- Suitable for landscape or portrait mounting
- Security screws help prevent unauthorised removal of screens
- Poles are supplied with safety bolt and grub screws for a secure installation
- Available in four pole lengths for more mounting flexibility
- Integrated cable management
- Cover plate included for a smart installation
- Simple 'hook-on' screen installation
- All mounting hardware included

INTERFACE POLES

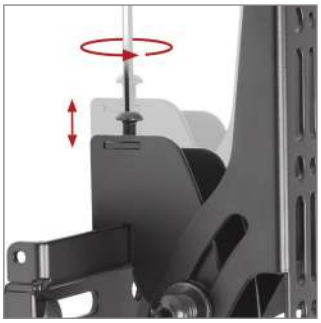

Levelling screws allow adjustment of the screen height once mounted

Security locking screws and Allen key provide a secure installation

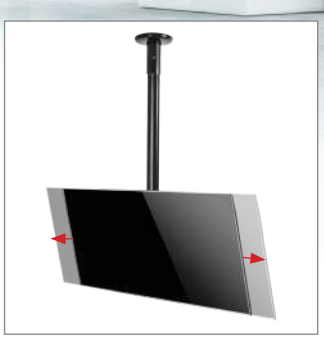

Post installation screen alignment for perfect screen positioning

Maximum VESA fixing can be increased to 600mm using the included adaptor arms

TECHNICAL DRAWINGS

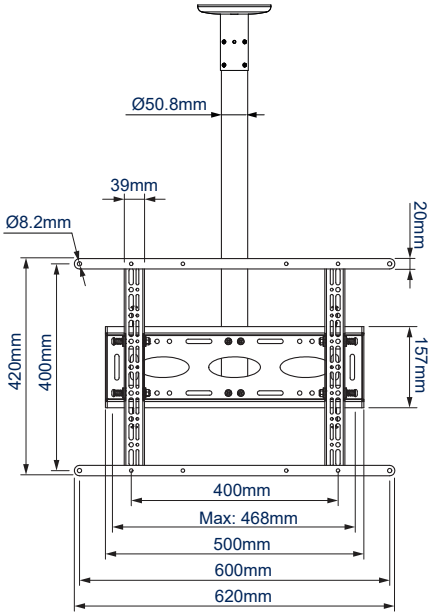

BT8424-150
FRONT VIEW WITH ADAPTOR ARMS

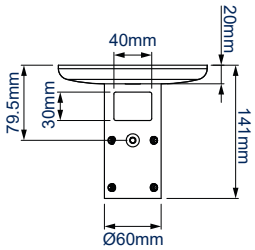

CEILING MOUNT
REAR VIEW

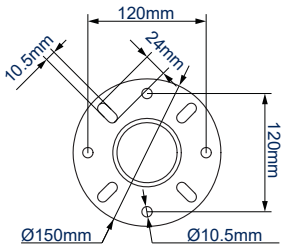

CEILING MOUNT
TOP VIEW

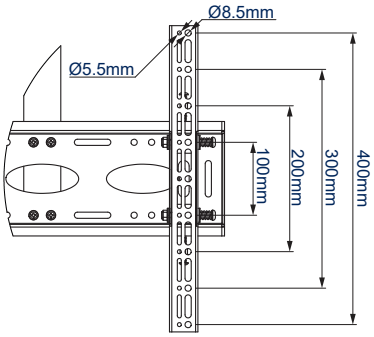

INTERFACE ARM
CLOSE UP VIEW

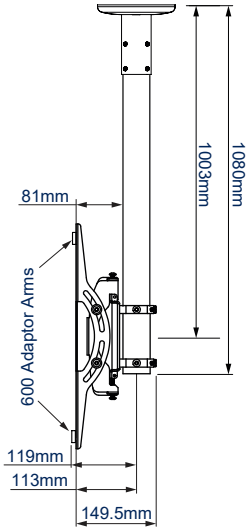

BT8424-100
SIDE VIEW - NO TILT

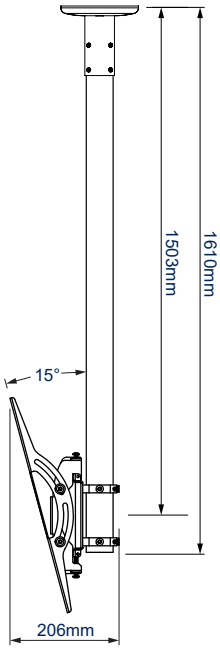

BT8424-150
SIDE VIEW - TILT DOWN

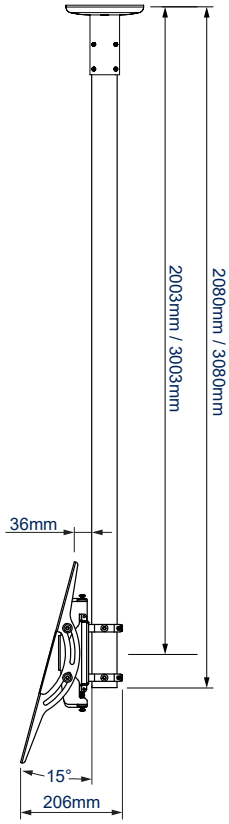

BT8424-200/300
SIDE VIEW - TILT UP

PACKING INFORMATION

*THIS IS A **2** BOX ITEM*

ORIGINAL DESIGN BY B-TECH - REGISTERED COMMUNITY DESIGN NO.: **002741256-0010 / 004038040-0021 / -0044**

COLOUR:	ORDER REF:	EAN CODE:	MASTER CARTON QTY:	INNER CARTON QTY:	MASTER CARTON WEIGHT:	MASTER CARTON CUBE:
Black with Black Poles	BT8424-100/B	5019318089800	1 / 1	0 / 0	7.48kg / 1.93kg	0.041cbm / 0.003cbm
Black with Chrome Poles	BT8424-100/C	5019318089855	1 / 1	0 / 0	7.48kg / 1.93kg	0.041cbm / 0.003cbm
Black with Black Poles	BT8424-150/B	5019318089862	1 / 1	0 / 0	7.48kg / 3.09kg	0.041cbm / 0.005cbm
Black with Chrome Poles	BT8424-150/C	5019318089879	1 / 1	0 / 0	7.48kg / 2.89kg	0.041cbm / 0.005cbm
Black with Black Poles	BT8424-200/B	5019318089886	1 / 1	0 / 0	7.48kg / 3.83kg	0.041cbm / 0.007cbm
Black with Chrome Poles	BT8424-200/C	5019318089893	1 / 1	0 / 0	7.48kg / 4.1kg	0.041cbm / 0.007cbm
Black with Black Poles	BT8424-300/B	5019318087325	1 / 1	0 / 0	7.48kg / 5.79kg	0.041cbm / 0.010cbm
Black with Chrome Poles	BT8424-300/C	5019318087332	1 / 1	0 / 0	7.48kg / 5.84 kg	0.041cbm / 0.010cbm

RELATED PRODUCTS

BT8426

Flat Screen Ceiling Mount with Adjustable drop and tilt for screens up to 65"

BT8428

Back-to-Back Flat Screen Ceiling Mount with Tilt for two screens up to 65"

BT8448

Extra-Large Flat Screen Ceiling Mount for screens over 65"

BT7553

Flat Screen Ceiling Mount with Tilt and Swivel for screens up to 28"

© 2017 B-Tech International Design & Manufacturing Ltd. All rights reserved.
The information in this specification sheet reflects the current technical specifications at the time of print.
We reserve the right to change specifications without prior notice. Please visit www.btechavmounts.com for the latest specifications.
All other brands and products are trademarks of their respective owners. All B-Tech images and symbols are exclusive property of B-Tech International Design & Manufacturing Ltd.
B-Tech accepts no liability for loss or damage caused by improper installation or mounting on unsuitable structures. Any reproduction or retransmission or republication of any part of this specification without prior written permission is strictly prohibited. Please pre-check with B-Tech International Design & Manufacturing Ltd. 11.2016.

SS-V3-BT8424-040817