CITIZEN

LINE THERMAL PRINTER

MODEL CT-E651

User's Manual

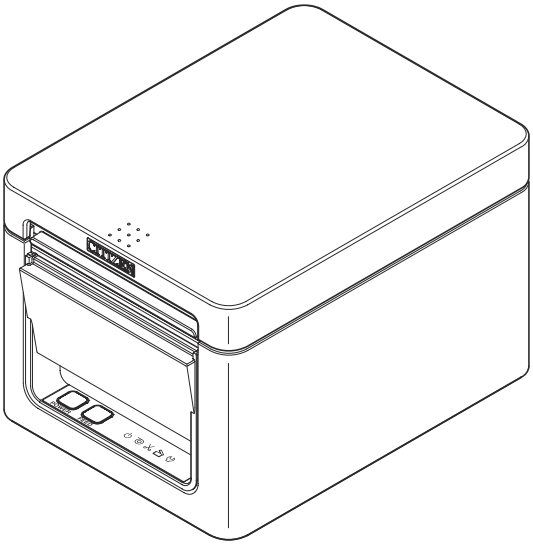

CITIZEN SYSTEMS JAPAN CO., LTD.

WEEE MARK

En If you want to dispose of this product, do not mix it with general household waste. There is a separate collection systems for used electronics products in accordance with legislation under the WEEE Directive (Directive 2002/96/EC) and is effective only within European Union.

Ge Wenn Sie dieses Produkt entsorgen wollen, dann tun Sie dies bitte nicht zusammen mit dem Haushaltsmüll. Es gibt im Rahmen der WEEE-Direktive innerhalb der Europäischen Union (Direktive 2002/96/EC) gesetzliche Bestimmungen für separate Sammelsysteme für gebrauchte elektronische Geräte und Produkte.

Fr Si vous souhaitez vous débarrasser de cet appareil, ne le mettez pas à la poubelle avec vos ordures ménagères. Il existe un système de récupération distinct pour les vieux appareils électroniques conformément à la législation WEEE sur le recyclage des déchets des équipements électriques et électroniques (Directive 2002/96/EC) qui est uniquement valable dans les pays de l'Union européenne.
Les appareils et les machines électriques et électroniques contiennent souvent des matières dangereuses pour l'homme et l'environnement si vous les utilisez et vous vous en débarrassez de façon inappropriée.

Sp Si desea deshacerse de este producto, no lo mezcle con residuos domésticos de carácter general. Existe un sistema de recogida selectiva de aparatos electrónicos usados, según establece la legislación prevista por la Directiva 2002/96/CE sobre residuos de aparatos eléctricos y electrónicos (RAEE), vigente únicamente en la Unión Europea.

It Se desiderate gettare via questo prodotto, non mescolatelo ai rifiuti generici di casa. Esiste un sistema di raccolta separato per i prodotti elettronici usati in conformità alla legislazione RAEE (Direttiva 2002/96/CE), valida solo all'interno dell'Unione Europea.

Du Deponeer dit product niet bij het gewone huishoudelijk afval wanneer u het wilt verwijderen. Er bestaat ingevolge de WEEE-richtlijn (Richtlijn 2002/96/EG) een speciaal wettelijk voorgeschreven verzamelsysteem voor gebruikte elektronische producten, welk alleen geldt binnen de Europese Unie.

Da Hvis du vil skille dig af med dette produkt, må du ikke smide det ud sammen med dit almindelige husholdningsaffald. Der findes et separat indsamlingssystem for udtjente elektroniske produkter i overensstemmelse med lovgivningen under WEEE-direktivet (direktiv 2002/96/EC), som kun er gældende i den Europæiske Union.

Por Se quiser deitar fora este produto, não o misture com o lixo comum. De acordo com a legislação que decorre da Directiva REEE – Resíduos de Equipamentos Eléctricos e Electrónicos (2002/ 96/CE), existe um sistema de recolha separado para os equipamentos electrónicos fora de uso, em vigor apenas na União Europeia.

Pol Jeżeli zamierzasz pozbyć się tego produktu, nie wyrzucaj go razem ze zwykłymi domowymi odpadkami. Według dyrektywy WEEE (Dyrektywa 2002/96/EC) obowiązującej w Unii Europejskiej dla używanych produktów elektronicznych należy stosować oddzielne sposoby utylizacji.

Compliance Statement for European Users

CE marking shows conformity to the following criteria and provisions:
Low Voltage Directive (2014/35/EU), EMC Directive (2014/30/EU), and RoHS directive (2011/65/EU)
Full text of the EU declaration of conformity is available at the following internet address:
http://www.citizen-systems.co.jp/english/support/download/printer/others/eu_doc/

IMPORTANT: This equipment generates, uses, and can radiate radio frequency-energy and if not installed and used in accordance with the instruction manual, maycause interference to radio communications. It has been tested and found to complywith the limits for a Class A computing device pursuant to Subpart J of Part 15 of FCCRules, which are designed to provide reasonable protection against such interferencewhen operated in a commercial environment. Operation of this equipment in aresidential area is likely to cause interference, in which case the user at his ownexpense will be required to take whatever measures may be necessary to correct theinterference.
CAUTION: Use shielded cable for this equipment.

Sicherheitshinweis
Die Steckdose zum Anschluß dieses Druckers muß nahe dem Gerät angebracht und leicht zugänglich sein.

For Uses in Canada
This Class A Information Technology Equipment (ITE) complies with Canadian CAN ICES-3(A)/NMB-3(A).
This Information Technology Equipment (ITE) does not exceed the Class A limits for radio noise emissions from digital apparatus set out in the Radio Interference Regulations of the Canadian Department of Communications.
Pour L'utilisateurs Canadiens
Cet Equipements informatiques (EI) de la classe A est conforme a la norme CAN ICES-3(A)/NMB-3(A) du Canada.
Le present Equipements informatiques (EI) n'emet pas de bruite radio electriques depassant les limites applicables aux appareils numeriques de la classe A prescrites dans le Reglement sur le brouillage radioelectrique edicte par le ministere des Communications du Canada.

GENERAL PRECAUTIONS

- Before using this product, be sure to read through this manual. After having read this manual, keep it in a safe, readily accessible place for future reference.
- The information contained herein is subject to change without prior notice.
- Reproduction or transfer of part or all of this document in any means is prohibited without permission from Citizen Systems.
- Note that Citizen Systems is not responsible for any operation results regardless of omissions, errors, or misprints in this manual.
- Note that Citizen Systems is not responsible for any trouble caused as a result of using options or consumables that are not specified in this manual.
- Except explained elsewhere in this manual, do not attempt to service, disassemble, or repair this product.
- Note that Citizen Systems is not responsible for any damage attributable to incorrect operation/handling or improper operating environments that are not specified in this manual.
- Data is basically for temporary use and not stored for an extended period of time or permanently. Please note that Citizen Systems is not responsible for damage or lost profit resulting from the loss of data caused by accidents, repairs, tests or other occurrences.
- If you find omissions, errors, or have questions, please contact your Citizen Systems dealer.
- If you find any pages missing or out of order, contact your Citizen Systems dealer for a replacement.

"Made for iPod," "Made for iPhone," and "Made for iPad" mean that an electronic accessory has been designed to connect specifically to iPod, iPhone, or iPad, respectively, and has been certified by the developer to meet Apple performance standards. Apple is not responsible for the operation of this device or its compliance with safety and regulatory standards.
Please note that the use of this accessory with iPod, iPhone or iPad may affect wireless performance.

- iPad, iPhone and iPod touch are trademarks of Apple Inc., registered in the U.S. and other countries. iPad Air and iPad mini are trademarks of Apple Inc.
- EPSON and ESC/POS are registered trademarks of Seiko Epson Corporation.
- QR Code is a registered trademark of DENSO WAVE INCORPORATED.
- Ethernet is a registered trademark of Fuji Xerox Corporation.
- Bluetooth® is a registered trademark of Bluetooth-SIG Inc.
- CITIZEN is a registered trademark of Citizen Watch Co., Ltd.
- All other trademarks are the property of their respective owners.
- Citizen Systems use these trademarks in accordance with the license of relevant owners.

Copyright© CITIZEN SYSTEMS JAPAN CO., LTD. 2017

SAFETY PRECAUTIONS...WHICH SHOULD BE STRICTLY OBSERVED

Before using this product for the first time, carefully read these SAFETY PRECAUTIONS. Improper handling may result in accidents (fire, electric shock or injury).
In order to prevent injury to operators, third parties, or damage to property, special warning symbols are used in the User's Manual to indicate important items to be strictly observed.

- After having read this Manual, keep it in a safe, readily accessible place for future reference.
- Some of the descriptions contained in this manual may not be relevant to some printer models.

The following describes the degree of hazard and damage that could occur if the printer is improperly operated by ignoring the instructions indicated by the warning symbols. Be sure to read this information carefully.

WARNING Neglecting precautions indicated by this symbol may result in fatal or serious injury.
CAUTION Neglecting precautions indicated by this symbol may result in injury or damage to property.

This symbol is used to alert your attention to important items.

This symbol is used to alert you to the danger of electric shock or electrostatic damage.

This symbol denotes a request to unplug the printer from the wall outlet.

This symbol is used to indicate that the power supply must be grounded.

This symbol is used to indicate useful information, such as procedures, instructions or the like.

This symbol is used to indicate prohibited actions.

PRECAUTIONS ON PRINTER INSTALLATION

WARNING

Do not use or store this product in a place where it will be exposed to:

* Flames or moist air.
* Direct sunlight.
* Hot airflow or radiation from a heating device.
* Salty air or corrosive gases.
* Ill-ventilated atmosphere.
* Chemical reactions in a laboratory.
* Airborne oil, steel particles, or dust.
* Static electricity or strong magnetic fields.

- **These locations create the risk of printer damage, as well as product failure, overheating, emission of smoke, fire, or electric shock.**
  They can also result in fire or electric shocks and so should always be avoided.

■ **Do not drop any foreign object nor spill liquid into the printer. Do not place any object on the printer either.**
■ **Do not drop any metallic object such as paper clips, pins or screws into the printer.**
■ **Do not place a flower vase, pot, or anything containing water on the printer.**
■ **Do not spill coffee, soft drinks, or any other liquid into the printer.**
■ **Do not spray insecticide or any other chemical liquid over the printer.**

- **Dropping a metallic foreign object into the printer, may cause printer failure, fire, or electric shock.**
  Should it occur, immediately turn the printer off, unplug it from the supply outlet, and call your local Citizen Systems dealer.

Do not handle the printer in the following ways:

■ Do not subject the printer to strong impacts or hard jolts (e.g., being stepped on, dropped or struck).
■ Never attempt to disassemble or modify the printer.

- **These actions create the risk of printer damage, as well as product failure, overheating, emission of smoke, fire, or electric shock.**
  They can also result in fire or electric shocks and so should always be avoided.

■ **This device is not appropriate to be used where a child may be present. Install, store, or use the device where it cannot be reached by a child.**

- **Electric appliances could cause an unexpected injury or accident if they are handled or used improperly.**
- **Keep the power cord and signal cables out of the reach of children. Also children should not be allowed to gain access to any internal part of the printer.**
- **The plastic bag the printer came in must be disposed of properly or kept away from children. Wearing it over the head may lead to suffocation.**

CAUTION

Do not use the printer under the following conditions.

■ Avoid locations subject to vibration or instability.
■ Avoid locations where the printer is not level.
• **The printer may fall and cause an injury.**
• **The quality of printing may deteriorate.**

■ Do not obstruct the printer's air vents.
■ Do not place anything on the printer.
■ Do not cover or wrap the printer in cloth or blankets.
• **Doing so could cause heat to build up and deform the case or start a fire.**

■ Avoid using the printer near a radio or TV set or from supplying it from the same electric outlet as these appliances.
■ Avoid using the printer interconnected with a cable or cord that has no protection against noise.
(For interconnections, use shielded or a twisted pair of cables and ferrite cores, or other anti-noise devices.)

■ Avoid using the printer with a device that is a strong source of noise.
• **The printer may have an adverse effect on nearby radio or TV transmissions. There may also be cases when nearby electrical appliances adversely influence the printer, causing data errors or malfunction.**
■ Installed in any orientation other than those specified.
• **Malfunction, failure, or electric shock may result.**

■ **Connect the printer to a ground.**
• **Electric leakage may cause an electric shock.**

■ **Do not connect the printer's ground to any of the following:**
• A gas explosion could result.
  * Gas piping
  * Telephone line ground
  * Lightning rod

• If lightning strikes a large surge of current may cause fire or shock.
  * Water pipes
• Plastic water pipes should not be used for grounding. (Those approved by a Waterworks Department may be used.)

■ **Before connecting or disconnecting the grounding lead to or from the printer, always unplug it from the electric outlet.**

PRECAUTIONS IN HANDLING THE PRINTER

WARNING

Please observe the following precautions for power source and power cord:

- ■ Do not plug or unplug the power cord with a wet hand.
- ■ Use the printer only at the specified supply voltage and frequency.
- ■ Use only the specified AC adapter with the printer.
- ■ Use only the power cord that comes with the printer, and never use the supplied power cord with another device.
- ■ Check to make sure that the supply outlet from which the printer is powered has a sufficient capacity.
- ■ Do not supply the printer from a power strip or current tap shared with other appliances.
- ■ Do not plug the power cord into an electric outlet with dust or debris left on the plug.
- ■ Do not use a deformed or damaged power cord.
- ■ Do not move the printer while its power is on.

- • **Neglecting to handle it properly may result in printer failure, emission of smoke, fire, or electric shock.**
- • **An overload may cause the power cord to overheat, catch fire, or the circuit breaker to trip.**

- ■ Do not allow anything to rest on the power cord. Do not place the printer where the power cord may be stepped on.
- ■ Do not subject the power cord to severe bending, twisting, or pulling. Do not carry the product while it is in this state either.
- ■ Do not attempt to modify the power cord unnecessarily.
- ■ Do not place the power cord near any heating device.

- • **Neglecting these cautions may cause wires or insulation to break, which could result in electric leakage, electric shock, or printer failure.**
  If the power cord sustains damage, contact your Citizen Systems dealer.

- ■ Do not leave things around the electric outlet.
- ■ Supply power to the printer from a convenient electric outlet, readily accessible in an emergency.

- • **Pull the plug to immediately shut it down in an emergency.**
- ■ Insert the power plug fully into the outlet.
- ■ If the printer will not be used for a long time, disconnect it from its electric outlet.
- ■ Hold the plug and connector when plugging or unplugging the power cord or signal cable after turning off the printer and the appliance connected to it.

CAUTION

Caution label is attached in the position shown in the following figure. Carefully read the handling precautions before using the printer.

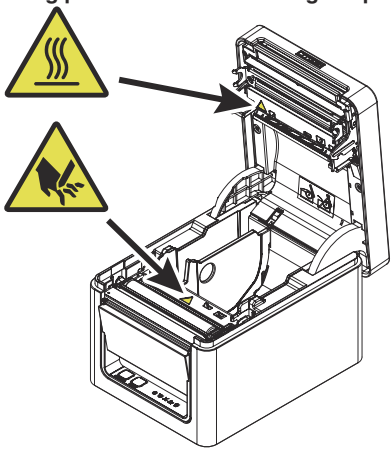

These labels indicate that the head becomes hot, so touching it may cause burns, and touching the auto cutter when opening the paper cover may cause cuts on hands.

Do not transport this printer with the paper roll inside.

- **Printer failure or damage may occur.**

To prevent possible malfunction or failure observe the following.

- ■ Do not open the paper cover during printing.
- ■ Avoid operating the printer without paper properly loaded.
- ■ Avoid the use of paper not complying with specifications.
  - **May result in poor print quality.**
- ■ Avoid using torn pieces of paper or paper spliced with plastic adhesive tape.
- ■ Avoid forcibly pulling already loaded paper by hand.
- ■ Avoid using a sharp pointed device to operate panel buttons.

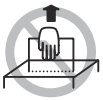

Be sure to firmly insert the cable plugs into their mating sockets.

- **A cross connection may damage the printer's internal electronics or the host system's hardware.**

Only use the printer with devices that have designated solenoid specifications for the cash drawer interface connector.

- **Neglecting this caution may result in malfunction or failure.**

To prevent injury and printer failures from worsening, observe the following:

- Do not touch the printing surface of the thermal head.
- Do not touch any of the moving parts (e.g., paper cutter, gears, active electric parts) while the printer is working.
- In case of trouble do not attempt to repair the printer. Ask Citizen Systems service for repair.
- Be careful that the covers do not pinch your hands or fingers.
- Be careful of the sharp edges on the printer. Do not allow them to injure you or damage property.

• **May result in electric shock, burn, or injury.**

If the printer emits smoke, an odd smell, or unusual noise while printing, immediately abort the current print session and unplug the printer from the electric outlet.

ⓘ DAILY MAINTENANCE

Observe the following precautions for daily maintenance.

- When cleaning the printer, always turn it off and unplug it from the electric outlet.
- Use a soft, dry cloth for cleaning the surface of the printer case.
  For severe stains, use a soft cloth slightly dampened with water.
  Never use organic cleaning solvent such as alcohol, paint thinner, trichloroethylene, benzene, or ketone. Never use a chemically processed cleaning cloth.
- To remove paper dust, use a soft brush.

⚠ CAUTION

The thermal head is at a dangerously high temperature immediately after printing.
Allow it to cool off before starting maintenance work.

THE TABLE OF CONTENTS

1. GENERAL OUTLINE 13
1.1 Features 13
1.2 Unpacking 14
1.3 Model Classification 15
1.4 Basic Specifications 15

2. EXPLANATION OF PRINTER PARTS 17
2.1 Printer Appearance 17
2.2 Inside the Paper Cover 19
2.3 Other Built-in Functions 20

3. SETUP 22
3.1 Connecting the AC Power Cord 22
3.2 Connecting Interface Cables 23
3.3 Bluetooth Interface Board 25
3.4 Ethernet (LAN)/Wireless LAN Interface Board 28
3.5 Connecting the Cash Drawer 32
3.6 Precautions for Installing the Printer 34
3.7 Adjusting the Paper Near-end Sensor 35
3.8 Loading Paper 36
3.9 58-mm Width Roll Paper Partition 38
3.10 Setting the Long Life Printing (LLP) Function 39
3.11 Mounting the Cable Cover 40
3.12 Precautions for Creating Applications and Practical Operations 41
3.13 Download Site for Various Electronic Files 41

4. MAINTENANCE AND TROUBLESHOOTING 42
4.1 Periodic Cleaning 42
4.2 Clearing a Cutter Error 43
4.3 Self Test 44
4.4 Hexadecimal Dump Printing 45
4.5 Error Indications 46
4.6 Paper Jams 48
4.7 Precautions for Performing Printing for Which Printing Speed Changes 48

5. OTHER 49
5.1 External Views and Dimensions 49
5.2 Printing Paper 50
5.3 Manual Setting of Memory Switches 51

1. GENERAL OUTLINE

The CT-E651 line thermal printer series is designed for use with a broad array of terminal equipment including data, POS, and kitchen terminals.
These printers have extensive features so they can be used in a wide range of applications.

1.1 Features

- High-speed printing at up to 300 mm/sec possible
- Stylish design
- Compact size with the lowest possible height
- The front paper eject structure enables use where the height is restricted
- Compliant with IPX1 for drip-proof capabilities *
- Support for paper widths of 80 mm and 58 mm
- High-speed cutter employed
- Long Life Printing (LLP) function to increase the head life available
- USB interface included as standard
- Interchangeable interface board
- Printer status and errors indicated by five LEDs
- Built-in drawer kick interface
- USB-linked power OFF function available
- 16 level greyscale and clear printing
- Paper saving function available
- Support for the JIS X0213 third and fourth level Kanji character sets
- Support for the simplified and traditional Chinese character sets and Hangul character set
- Support for UTF-8 using commands
- Various customizations using the memory switches possible
- User created characters and logos can be saved in the user memory
- Support for barcodes including 2D barcodes
- Apple MFi certified Bluetooth communication support (Bluetooth model)

*: The product has been checked to determine that vertically falling drops of water will have no harmful effect, but the product is not guaranteed to be completely drip-proof.

1.2 Unpacking

Make sure the following items are included with your printer.

NAME	QUAN-TITY	ILLUSTRATION
Printer	1	
AC Adapter (37AD5)	1	
AC power cord	1	
Partition	1	
Cable clamp *	1	
Cable cover	1	
Sample paper roll	1 roll	
Quick Start Guide	2	

*: Included with the RS and NN models

1.3 Model Classification

Model numbers indicate printer features according to the following system.

CT - E651 RS E - BK

1 2 3 4

1. Model name
2. Interface
   RS: Serial RS-232C+USB
   ET: Ethernet+USB
   BT: Bluetooth+USB
   WF: Wireless LAN+Ethernet+USB
   NN: USB
3. Market
   U: North America
   E: Europe
4. Body case color
   WH: Pure white
   BK: Black

Contact us in advance for special combinations, some of which may not be available.

1.4 Basic Specifications

Item	Specifications			
Model	CT-E651			
Print method	Line thermal dot print method			
Print widths	72 mm/576 dots, 68.25 mm/546 dots, 64 mm/512 dots, 52.5 mm/420 dots, 48.75 m/390 dots, 48 mm/384 dots, 45 mm/360 dots, factory default 72 mm			
Dot density	8 × 8 dots/mm (203 dpi)			
Print Speed	300 mm/sec (maximum speed, print density level 100%, 2400 dot lines/sec)			
Number of print columns *1	Font	Maximum number of characters (columns) / 80 mm	Maximum number of characters (columns) / 58 mm	Dot configuration (dots)
	Font A	48	35	12 × 24
	Font B	64	46	9 × 24
	Font C	72	52	8 × 16
Character size *2	Font A:1.50×3.00 mm, Font B:1.13×3.00 mm, Font C:1.00×2.00 mm			
Character type	Alphanumeric characters, international characters, PC437/850/852/857/858/860/863/864/865/866, WPC1252, WPC1258, Katakana, ThaiCode 11/18 (1Pass/3Pass), TCVN-3, Kanji (JIS first, second, third, and fourth level), Kana, extended characters, JIS X0213, GB18030, BIG5, KS Hangul, EUC Hangul			

Item	Specifications
User memory	384 KB (capable of storing user-defined characters and logos)
Bar code types	UPC-A/E, JAN(EAN) 13 digits/8 digits, ITF, CODE39, CODE128, CODABAR (NW-7), CODE93, PDF417, QR Code, GS1-DataBar
Line spacing	4.25 mm (1/6 inch) (Variable by command)
Paper roll	Roll paper: 80 mm x max. ø83 mm Paper thickness: 53 to 85 µm (paper roll inner diameter 12 mm / outer diameter 18 mm)
Interface	Serial (RS-232C standard), USB, Bluetooth+USB, LAN, wireless LAN+LAN
Ethernet	100BASE-TX/10BASE-T
Wireless LAN	IEEE802.11n, IEEE802.11a, IEEE802.11g, IEEE802.11b
Bluetooth	Version: Bluetooth 3.0 + EDR Profile: SPP (Serial Port Protocol), iAP (iPod Accessory Protocol) Power class: Class2
Cash drawer kick-out	Supports 2 cash drawers
Input buffer	4 K bytes/45 bytes
Supply voltage	DC 24 V ±5%
Power consumption	Approximately 50 W (average), 2 W or less (standby), 0.2 W or less (USB-linked power OFF state)
AC Adapter (37AD5)	Rated input: AC 100 to 240 V, 50/60 Hz, 150 VA Rated output: DC 24 V, 2.1 A
Weight	Approximately 1.3 kg
Outside dimensions	125 (W) × 165 (D) × 108 (H) mm
Operating temperature and humidity	5 to 45°C, 10 to 90% RH (no condensation)
Storage temperature and humidity	-20 to 60°C, 10 to 90% RH (no condensation)
Reliability	Print head life: 200 km, 200 million pulses (room temperature, room humidity, specified recommended paper, specified paper thickness), Auto cutter life: 2 million cuts (3-inch), 1.5 million cuts (2-inch) (room temperature, room humidity, specified recommended paper, specified paper thickness)
Safety standard *3	UL, C-UL, FCC Class A, CE Marking

Notes:

*1: The number of printable columns is selected using a memory switch.
The numbers of columns noted in this table refer to typical models. The number of columns varies depending on specifications.

*2: Characters appear small because the dimensions include a blank area surrounding each character.

*3: This standard applies when our AC Adapter (37AD5) is used.

2. EXPLANATION OF PRINTER PARTS

2.1 Printer Appearance

Names of parts

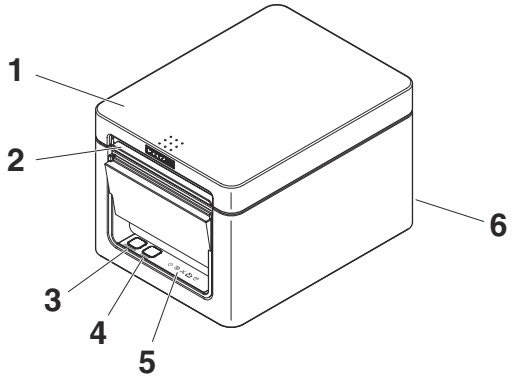

1. Paper cover
   Open to load paper.
   Also open to clear a cutter error.
   * The paper cover cannot be used for manual cutting.

Refer to 4.2 Clearing a Cutter Error

2. Cover open lever
   Use to open the paper cover.

3. POWER button
   Hold down two or three seconds to switch power on or off.

4. FEED button
   Press this button to feed paper.
   In case of a cutter error, press the FEED button with the paper cover closed after removing the cause.
   The printer enters the mode for setting memory switches and running self test.

Refer to 4.3 Self Test

Refer to 5.3 Manual Setting of Memory Switches

5. Operation panel

6. Rear connectors

Operation panel

The operation panel has five LEDs and two buttons.

	LED name	Color	Description
	POWER LED	Green	Lights when the power is on, turns off when the power is off.
	PAPER LED	Green	Lights or flashes when no paper or low paper is detected. May also light or flash when other abnormalities are detected.
	CUTTER LED	Green	Flashes when a cutter error is detected. May also light or flash when other abnormalities are detected.
	COVER LED	Green	Lights or flashes when an open paper cover is detected. May also light or flash when other abnormalities are detected.
	SERVICE LED	Orange	Flashes when an unrecoverable printer abnormality is detected.

Refer to 4.5 Error Indications

Rear connectors (serial interface example)

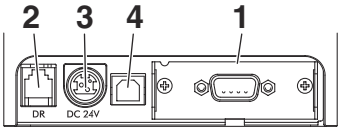

RS: Serial RS-232C + USB

1. Interface connector (serial, USB, etc.)
   Connect to the interface cable.
2. Cash drawer kick-out connector
   Connect to the cable from the cash drawer.
3. Power connector
   Connect to the AC adapter cable.
4. USB connector

2.2 Inside the Paper Cover

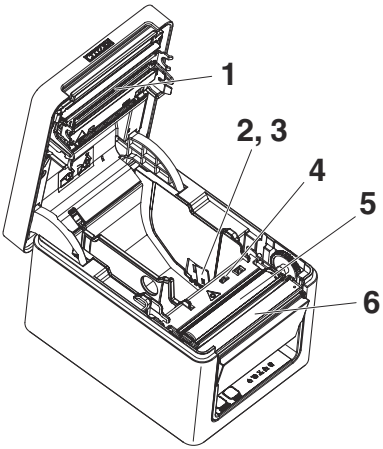

1. Print head (thermal)
   Prints characters and graphic data on paper (paper rolls).
2. Paper near-end (PNE) sensor
   Detects when the paper is near the end of the roll. Adjust the position of the sensor to determine when it detects the end of the paper is near.
3. Button to change paper near-end sensor
   Change the position of the paper near-end sensor to match the paper being used.

Refer to 3.7 Adjusting the Paper Near-end Sensor

4. Paper end (PE) sensor
   Detects when there is no paper. Printing stops when this sensor detects there is no paper.
5. Platen
   Feeds the paper.
   Do not remove the platen except to do maintenance.
6. Auto cutter
   Cuts the paper.

Refer to 5.3 Manual Setting of Memory Switches

2.3 Other Built-in Functions

- Buzzer
  Buzzes when errors occur or when operations or command operations are performed.

Refer to 4.5 Error Indications

- User memory
  You can save user-defined logo and character data in this memory. Data remains stored in this memory even if the printer is turned off. For information on how to save data, refer to the Command Reference.

- Memory switch
  Setting of various kinds of functions can be stored in memory. Settings remain stored in the memory even if the printer is turned off.

- USB-linked power OFF (When MSW6-3 of memory switch is set to ON)
  When the printer is connected to PC by USB, the printer becomes the state of USB-linked power OFF after 3 seconds when PC power off or USB connection lost.
  This mode is canceled when the PC is turned back on or when a USB connection is established.

CAUTION

- Since the POWER LED is unlit when the state of USB-linked power OFF, it cannot be identified from the power OFF.
- Pressing the POWER button while the state of USB-linked power OFF turns on power normally.

- Paper saving functions
  Memory switches MSW8-3 through MSW8-4 can be used to configure the settings below, which save paper.
  - Top margin suppression

    The printer back feeds the paper before printing which reduces the blank space at the top edge of the paper.
    The back feed amount can be specified.
  - Line gap reduce

    Automatically compresses the linefeed amount between lines. The compression ratio can be specified.

CAUTION

Remove the partially cut paper before performing back feed for starting printing.
The cut paper may be torn off in the next printing process, which may cause a problem.

- Auto side shift (MSW8-6)
  This function dissipates heat load during frequent heat generation by a vertical ruled line or other specific head heating element.
  If no data is received within 15 seconds after each cut or print, the print position is automatically slid N* dots to the right. The original print position is returned to at the next slide timing.
  * N is the MSW8-6 setting value.

CAUTION

- If the right margin is too narrow, this may result in some print characters being cut off.
- This function is disabled under initial settings.
- To enable this function, use MSW8-6 to specify an appropriate value for the maximum slide amount.

3. SETUP

3.1 Connecting the AC Power Cord

1. **Turn off the power.**
2. **Connect the power connector to the AC adapter cable connector.**
   Next, connect the AC power cord to the AC inlet, and insert the plug into an electric outlet.

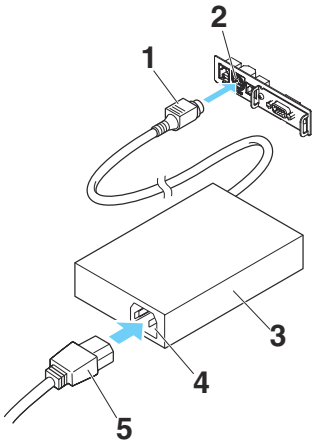

1. Cable connector
2. Power connector
3. AC adapter
4. AC inlet
5. AC power cord

CAUTION

- Use only the specified AC adapter.
- Always hold the AC adapter's cable connector by the connector when removing or inserting it.
- Use an AC power source that does not also supply power to equipment that generates electromagnetic noise.
- Pulling on the AC power cord may damage it, cause a fire, electric shock, or break a wire.
- If a lightning storm is approaching, unplug the AC power cord from the electric outlet. A lightning strike may cause a fire or electric shock.
- Keep the AC power cord away from heat generating appliances. The insulation on the AC power cord may melt and cause a fire or electric shock.
- If the printer is not going to be used for a long time, unplug the AC power cord from the electric outlet.
- Place the AC power cord so that people do not trip on it.

3.2 Connecting Interface Cables

1. **Turn off the power.**
2. **Orient the interface cable correctly and insert it into the interface connector.**

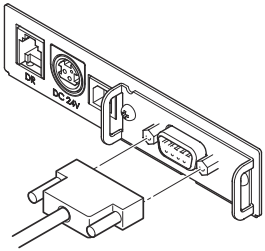

RS: Serial RS-232C + USB

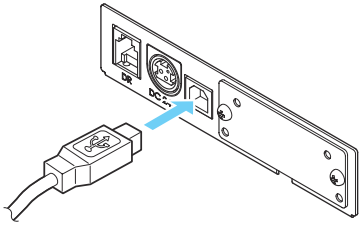

NN: USB

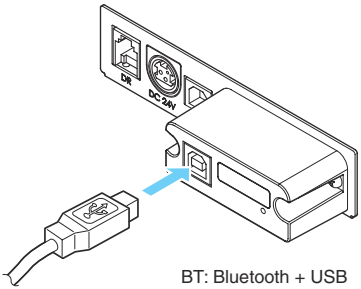

BT: Bluetooth + USB

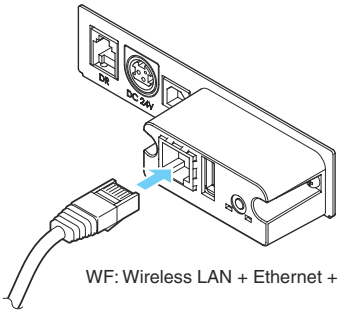

WF: Wireless LAN + Ethernet + USB

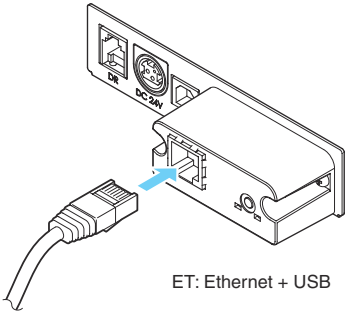

ET: Ethernet + USB

⚠ CAUTION

- When disconnecting the cable, always hold the connector.
- Be careful not to insert the USB cable into the cash drawer kick-out connector.
- To connect more than one printer to a single computer by USB, you must change the serial number of the USB interface.
- Hold the connector of the LAN cable perpendicular and straight when connecting or disconnecting it. Doing it at an angle may cause the connector to misconnect.
- Do not connect multiple interfaces at the same time.

Use a serial cable with the connection layout shown below.

9-pin (female) - 9-pin (female) cable

PC		Printer	
Signal	Pin	Pin	Signal
RXD	2	2	RXD
TXD	3	3	TXD
DTR	4	4	DTR
SG	5	5	SG
DSR	6	6	DSR
RTS	7	7	RTS
CTS	8	8	CTS

CAUTION

Place the interface cable so that people do not trip on it.

3.3 Bluetooth Interface Board

Bluetooth status LED

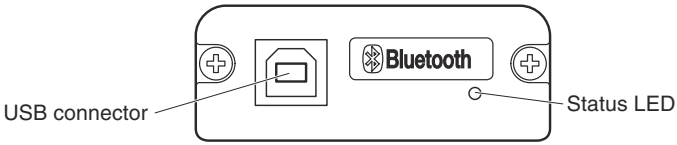

CAUTION

When using this interface board as a USB interface, do not connect USB cables to both the main unit side and interface board side.
If USB cables are connected to both, priority will be given to communication of the one connected to the connector on the main unit side.

Status	Description	LED Status
Detection standby (Discoverable)	Standing by for detection and connection	
Connection standby (Connectable)	Standing by for connection	
iOS connection	Data session unopened	
Communicating	iOS: data session opened Other OS: connection established and communication in progress	
Error	Error or settings being configured	Unlit

Pairing operation

You need to perform the operations below the first time you establish a Bluetooth connection for Bluetooth data communication.

1. Detect Bluetooth devices
2. Configure pairing settings

1. **Detecting Bluetooth devices**
   Confirm that Bluetooth is enabled on the host PC before searching for Bluetooth devices.
   This product will show up as "CT-E651_XX"(XX is last 2 digits of unique BD address.) when it is detected.
   Select this product from among the detected devices.
   Note: You can search for devices and change the names.
   When memory switch MSW13-5 is set to "No Response," nothing is displayed by device detection.
   You can temporarily switch this setting to device detection (detect mode) by opening the paper cover and holding down the FEED button for two seconds. Detect mode is exited when the connection between the host PC is terminated.

2. **Configuring pairing settings**
   Normally, selecting the printer during device detection will transition directly to pairing settings.

CAUTION

Some host PC configurations and models may not transition directly to pairing settings after the printer is selected during device detection.

The operation required to configure pairing settings depends on whether SSP (secure simple pairing) is enabled on the host PC.
If SSP is enabled on the host PC, pairing can be achieved without additional operations.
If SSP is disabled on the host PC, you will be prompted to input a passkey.
Input the passkey as described below.
Passkey
Last four digits of the address on the self test printout (Letters A through F are uppercase)
Example: If the address is 01:23:45:67:89:AB the passkey is 89AB.
If you delete paring information from the host PC without deleting the corresponding pairing information on the printer, the printer may not show up if you detect devices again with the host PC.
To delete printer pairing information, open the paper cover and then hold down the FEED button for five seconds.
Deleting pairing information on the printer will put the printer into discovery mode.

Auto reconnection

With iOS device Bluetooth communication, a connection between a paired iOS device and the printer is not automatically restored after it is lost. However, when auto reconnection is enabled, the printer tries to reconnect with an iOS device after two-way communication is enabled and automatically restores the connection.

CAUTION

This function is enabled when shipped from the factory. (MSW13-6)
Auto reconnection can take some time to connect when the host is not an iOS device.

■ Even if the partner device is an iOS device, the conditions below can interfere with the auto reconnection function.

- **When you want Bluetooth communication to cut off after printing is complete**
- **When there are multiple iOS devices printing on the same printer**

Under such conditions, disable auto reconnection.

Enabling and disabling auto reconnect

During self test, press the FEED button 3 times -> Auto reconnect = Valid
During self test, press the FEED button 4 times -> Auto reconnect = Invalid
At the end of self test, new setting will be printed as Auto reconnect [Valid] or [Invalid].

Refer to 4.3 Self Test

3.4 Ethernet (LAN)/Wireless LAN Interface Board

This section provides an overview of the interface board. For details about this board, refer to the separate manual.

Panel button operation

Board operations are performed using the panel button on the rear of the LAN board.

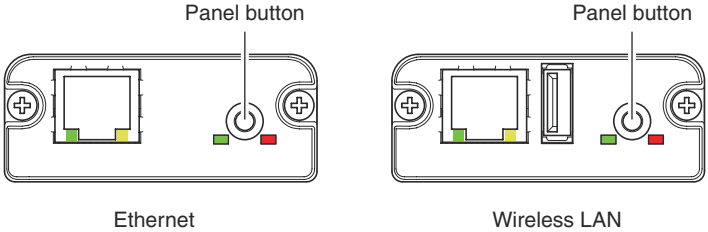

- Enabling LAN connection
  Turn on the printer. Operation of this board will start about 20 seconds later.
- Printing LAN setup information
  Press the panel button.
- Entering setting mode
  Hold down the panel button. A buzzer* will sound once to indicate that setting mode has been entered.
  - You can use setting mode to read factory settings.
  - If you do not perform any operation for three seconds while in setting mode, a buzzer* will sound once to indicate the board has returned to normal mode.

    * Depending on the printer model and settings, the buzzer may not sound.
- Returning to factory settings
  Enter the board setting mode, and then hold down the panel button. This returns the board to its factory settings.

CAUTION

The board will automatically restart after this operation is complete. After clearing settings, you will need to re-configure network settings.

LED Functions

The tables below explain how to interpret LED indications.

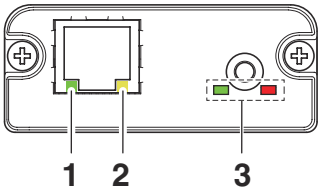

Ethernet

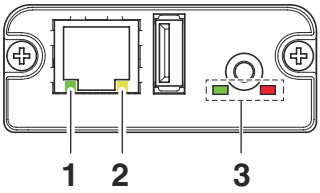

Wireless LAN

1. Wired LAN transmission speed

Transmission speed	LED (green)
100 Mbps	Lit
10 Mbps/Not connected	Unlit

2. Wired LAN connection/transmission status

Connection status	LED (yellow)
Connected	Lit
Not connected	Unlit
Data transmission in progress	Flashing

3. Wired/Wireless LAN status

Connection status		LED (green)	LED (red)	Description
No printer connection		Unlit	—	Board is not connected with a printer.
Printer connection	No network connection	Lit	Unlit	Board is connected with a printer.
	Connected by wired LAN	Lit	Flashing (1-second cycle)	Getting an IP address from the DHCP server over wired LAN.
	Wired LAN operation	Lit	Lit	Network operation being performed over wired LAN.
	Connected by wireless LAN *	Flashing (2-second cycle)	Flashing (1-second cycle)	Connecting to an access point or getting an IP address from the DHCP server over wireless LAN.
	Wireless LAN operation *	Flashing (2-second cycle)	Lit	Network operation being performed over wireless LAN.
Resource error		Alternate flashing (1-second cycle)		Board is unable to operate normally.
System error		Alternate flashing (0.2-second cycle)		Board is unable to operate normally.

*: Only when using wireless LAN

Web Manager

The interface board has a Web Manager function that can be used to connect to the board with a web browser and change board settings.

Starting up Web Manager

1. **Start up a web browser.**
2. **In the address field, input the board's IP address and then press [Enter].**

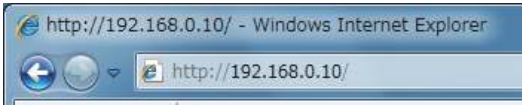

HOME Screen

This is the Web manager home screen.
The following screen is an example for a wireless LAN.

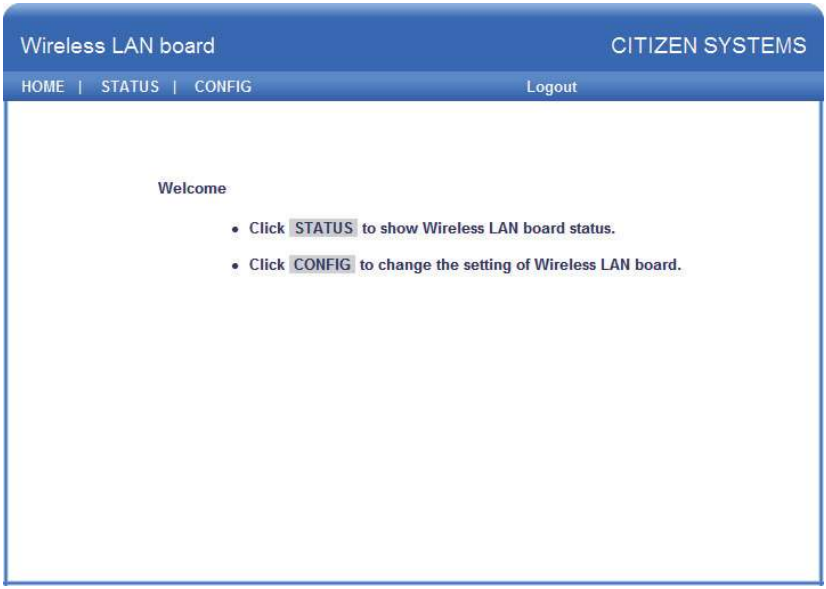

Here, press the [CONFIG] button.

CONFIG Screen

This will display the Login dialog box shown below. Log in as an administrator and then configure interface board settings.

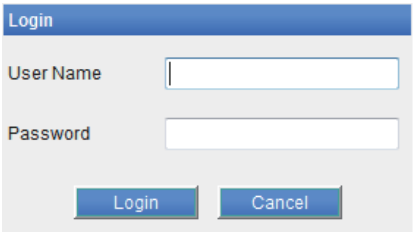

- User Name
  Input a board administrator user name. (Initial setting: admin)
- Password
  Input the administrator user password. (Initial setting: admin)
- [Login] button
  After inputting an administrator user name and password, click the [Login] button. This displays the setting screen.
  For details about settings, refer to the separate manual.

3.5 Connecting the Cash Drawer

1. **Turn off the power.**
2. **Confirm the orientation of the cash drawer kick-out cable connector and connect it to the cash drawer kick-out connector at the back of the printer.**
3. **Remove the screw for the ground wire.**
4. **Screw the cash drawer's ground wire to the body of the printer.**

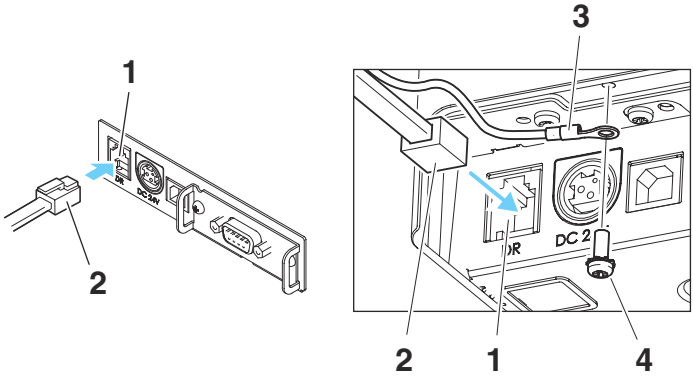

1. Cash drawer kick-out connector
2. Cash drawer kick-out cable connector
3. Ground wire
4. Screw for ground wire

CAUTION

- Connect only the cash drawer kick-out cable to this connector. (Do not connect a telephone line.)
- Signals cannot be output from the cash drawer kick-out connector while printing.
- Hold the connector of the drawer kick cable perpendicular and straight when connecting or disconnecting it. Doing it at an angle may cause the connector to misconnect.

(1) Connector pin configuration

No.	Signal	Function
1	FG	Frame ground
2	DRAWER1	Cash drawer 1 drive signal
3	DRSW	Cash drawer switch input
4	VDR	Cash drawer drive power supply
5	DRAWER2	Cash drawer 2 drive signal
6	GND	Signal ground (common ground on circuits)

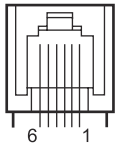

Connector used:TM5RJ3-66 (Hirose) or equivalent
Applicable connector: TM3P-66P (Hirose) or equivalent

(2) Electric characteristics

1) Drive voltage: 24 VDC

2) Drive current: Approx. 1 A max. (not to exceed 510 ms.)

3) DRSW signal: Signal levels: “L” = 0 to 0.5 V, “H” = 3 to 5 V

(3) DRSW signal
Status can be tested by commands.

(4) Drive circuit

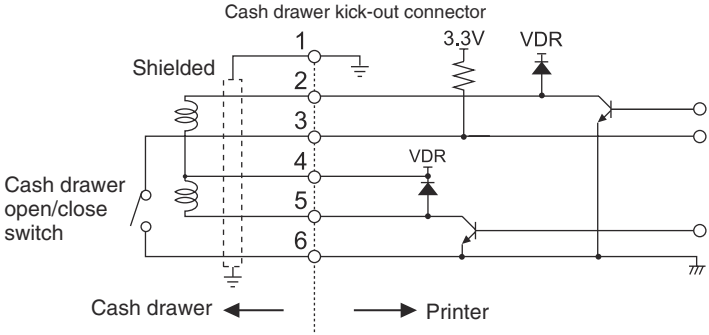

CAUTION

- Cash drawers 1 and 2 cannot be operated at the same time.
- The solenoid used for the cash drawer should be 24 Ω or more. Do not allow the electric current to exceed 1 A. Excessive current could damage or burn out the circuits.

3.6 Precautions for Installing the Printer

This printer can only be positioned horizontally. It cannot be positioned vertically or on a wall.

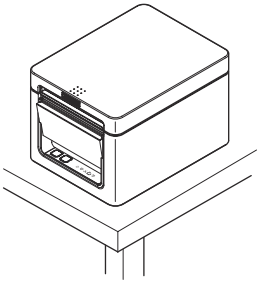

Horizontal position

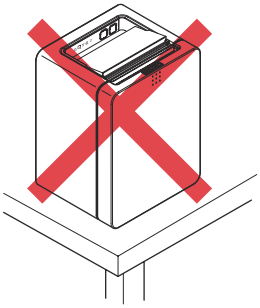

Vertical position

CAUTION

Do not use the printer under the following conditions.

- Avoid locations subject to vibration or instability.
- Locations that are very dirty or dusty.
- Avoid locations where the printer is not level.
  - **The printer may fall and cause an injury.**
  - **The quality of printing may deteriorate.**
- Oriented other than as specified.
  - **Malfunction, failure, or electric shock may result.**

3.7 Adjusting the Paper Near-end Sensor

Change the settings of the paper near-end sensor to set the position at which the near-end of the paper is detected.

1. **Gently press the paper near-end sensor with your finger.**
2. **Keep the paper near-end sensor pressed as you move it left and right. The sensor positions are shown below for the various diameters of the paper roll used.**

(Unit: mm)

Sensor position	Paper roll outer diameter when near-end is detected	Exterior/ interior diameter of core of paper roll used
1*	Approximately ø22.0	ø18/ø12
2	Approximately ø25.0	ø18/ø12
3	Approximately ø29.0	ø18/ø12
4	Approximately ø34.0	ø32/ø25.4

Notes:
*Sensor position when shipped from the factory. However, factory settings differ depending on the destination market.

CAUTION

The diameter of the roll of paper that is detected is an estimate. Some variations may occur depending on the paper.

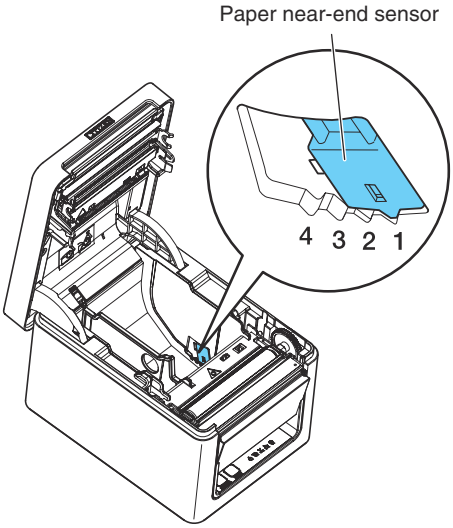

3.8 Loading Paper

1. **Turn on the power.**
2. **Flip up the cover open lever to open the paper cover.**

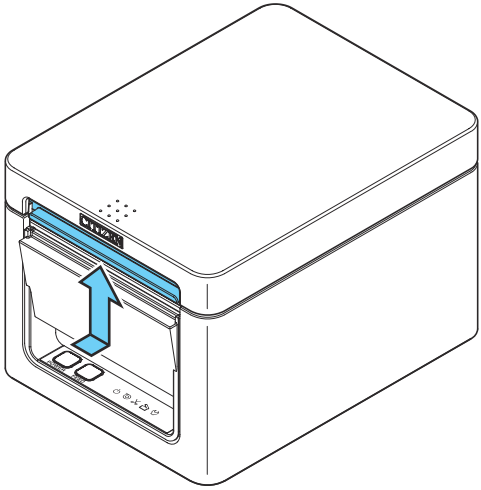

CAUTION

When pressing up on the lever, take care that you do not pinch your fingers in the gap above the top of the lever.

3. **Load the paper roll so that the printable side of the paper is facing up, as shown by arrow A.**
4. **Pull a few centimeters of paper straight out in the direction of arrow B.**
5. **Close the paper cover until you hear a click. Paper is fed and cut automatically (by the factory setting).**

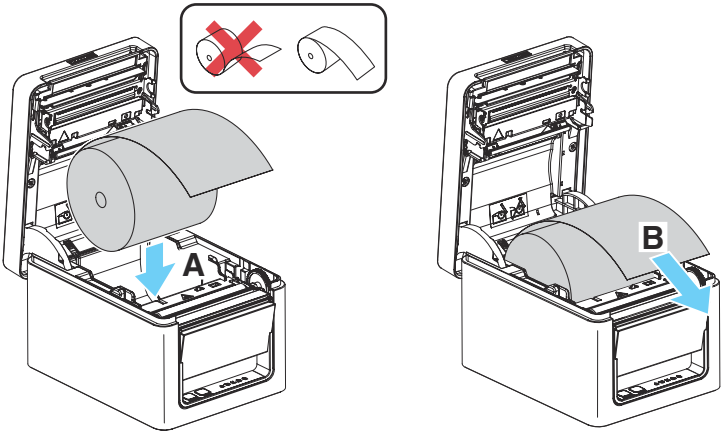

CAUTION

- When opening the paper cover, be careful not to touch the entrance of the blade of the auto cutter.
- The print head is very hot immediately after printing. Be careful not to touch it with your hands.
- Do not touch the print head with bare hands or metal objects.
- Always use the specified types of paper rolls.
- Confirm that the paper roll is set correctly.
- If the paper is skewed and not coming straight out of the paper cover, open it and straighten the paper.
- Always pull a few centimeters of paper straight out of the printer if you open the paper cover while paper is loaded.
- Press on the center of the paper cover to close it securely.
- Be careful of paper cuts while loading the paper.

Refer to PRECAUTIONS IN HANDLING THE PRINTER

3.9 58-mm Width Roll Paper Partition

1. **Turn off the power.**
2. **Flip up the cover open lever to open the paper cover.**
3. **Mount the supplied partition to the groove. When using the 80-mm width roll paper, remove the partition.**
4. **Change the print area width while referring to "Manual Settings for the Memory Switches" in Section 5.3.**

Refer to 5.3 Manual Setting of Memory Switches

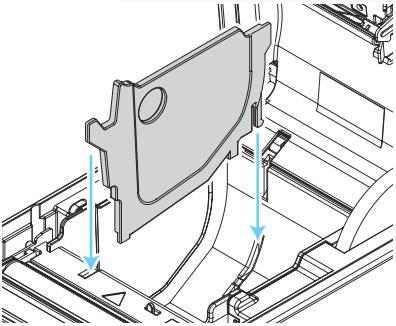

CAUTION

- When opening the paper cover, be careful not to touch the entrance of the blade of the auto cutter.
- The print head is very hot immediately after printing. Be careful not to touch it with your hands.
- Do not touch the print head with bare hands or metal objects.
- When using 58-mm wide paper, use the printer as a dedicated printer for that paper size. The printer may not correctly feed paper or print if it is switched to 80-mm wide paper after using 58-mm wide paper.

Refer to PRECAUTIONS IN HANDLING THE PRINTER

3.10 Setting the Long Life Printing (LLP) Function

It can extend the abrasion life of the head-resistant by reducing the pressure to press the print head against the paper.
The Long Life Printing (LLP) function can be enabled by changing the position of the projection switch inside the paper cover.

1. **Turn off the power.**
2. **Flip up the cover open lever to open the paper cover.**
3. **Flip down the projection switches on both sides in the arrow direction with the tip of a screwdriver.**
   Flip down the projection switches on the left and right from the standard position to the LLP position one by one.
4. **Close the paper cover firmly until it clicks.**

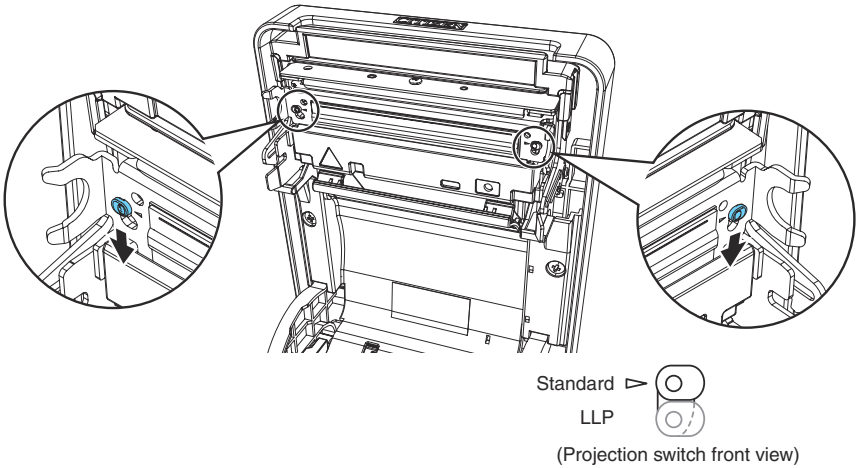

CAUTION

- When opening the paper cover, be careful not to touch the entrance of the blade of the auto cutter.
- The print head is very hot immediately after printing. Be careful not to touch it with your hands.
- Do not touch the print head with bare hands or metal objects.
- The set position of the projection switches on the left and right must be identical.
- When this setting is enabled, the printing density may decrease. If necessary, increase the printing density or use a paper with excellent coloring properties.
- This function reduces physical friction by reducing the head pressure and does not guarantee friction resistance for all bad quality papers.

Refer to PRECAUTIONS IN HANDLING THE PRINTER

3.11 Mounting the Cable Cover

1. **Remove the screw for the ground wire.**
2. **Screw the screw for the ground wire into the cable cover and the body of the printer.**

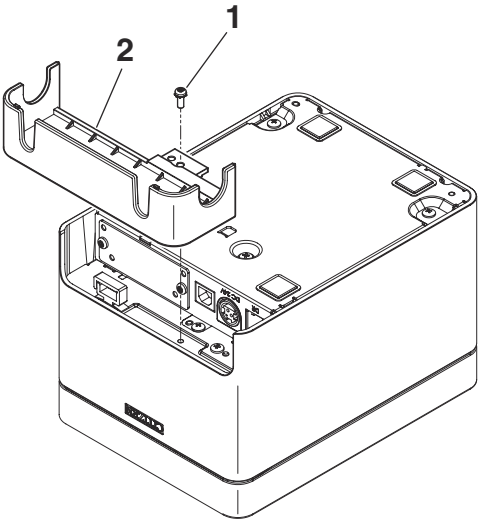

1. Screw for ground wire
2. Cable cover

3.12 Precautions for Creating Applications and Practical Operations

If printing is done immediately after the paper is partially cut and torn off, the top of the next print out may be distorted.
For printing after cutting, we recommend to print with the first line empty.
If you are using a serial interface that has a slow data transmission speed, streaks may appear in the printouts when you are printing graphics or gradated text, which require large amounts of data.
USB interfaces may be susceptible to the effects of electromagnetic interference from the host or environment.
If this is the case, try using a cable with ferrite cores on both ends, which are very effective at eliminating EMI.

3.13 Download Site for Various Electronic Files

You can view support information and download the latest documents, drivers, utilities, etc. from the following site.
http://www.citizen-systems.co.jp/support/download/printer/ct-e651/

4. MAINTENANCE AND TROUBLESHOOTING

4.1 Periodic Cleaning

A dirty print head or platen may reduce printing quality or cause malfunctions. We recommend cleaning the printer periodically (every 2 to 3 months) as shown below.

1. **Turn off the power.**
2. **Flip up the cover open lever to open the paper cover.**
3. **Wait a few minutes until the print head cools.**
4. **Use a cotton swab dampened with ethyl alcohol to wipe off any dirt and dust that is on the print head and platen.**

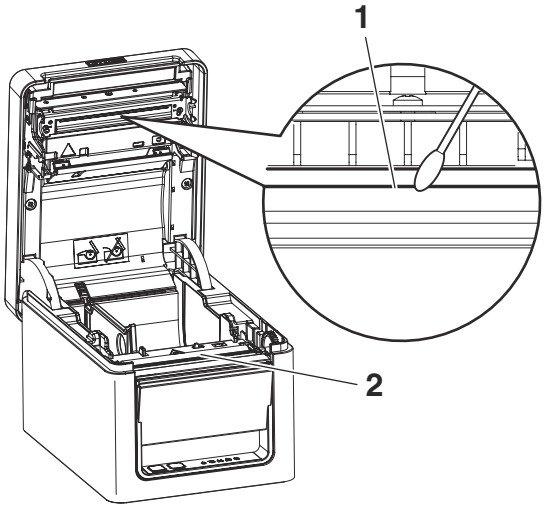

1. Print head
2. Platen

CAUTION

- When opening the paper cover, be careful not to touch the entrance of the blade of the auto cutter.
- The print head is very hot immediately after printing. Be careful not to touch it with your hands.
- Do not touch the print head with bare hands or metal objects.

Refer to PRECAUTIONS IN HANDLING THE PRINTER

4.2 Clearing a Cutter Error

If the auto cutter stops during the auto cutter operation with the blade of the auto cutter in the open position due to foreign matter entering, paper jamming, etc., the CUTTER LED flashes. When a cutter error occurs, resolve the cutter error with the following procedure.

1. **Turn off printer power.**
2. **Flip up the cover open lever to open the paper cover.**
3. **Remove any jammed paper including any scraps of paper. (Remove the paper roll that is loaded in the holder also.)**
4. **Reload the paper roll and close the paper cover.**
5. **Turn on the power.**

CAUTION

- When opening the paper cover, be careful not to touch the entrance of the blade of the auto cutter.
- The print head is very hot immediately after printing. Be careful not to touch it with your hands.
- Do not touch the print head with bare hands or metal objects.

Refer to PRECAUTIONS IN HANDLING THE PRINTER

4.3 Self Test

You can use self test to check for printer problems.

Performing a self test operation

1. **While paper is loaded, press and hold the FEED button and turn on the power.**
2. **Hold the FEED button down for about one second until the buzzer sounds. Release the button to start self test. The printer will print its model name, version, memory switch settings, and built-in fonts.**

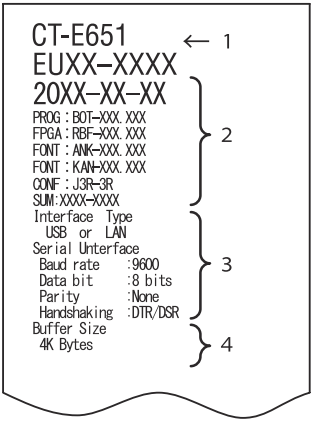

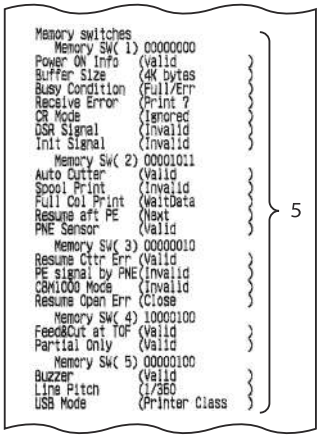

1. Printer type name
2. Firmware version
3. Interface settings
4. Buffer size
5. Memory switch settings

4.4 Hexadecimal Dump Printing

Print received data in hexadecimal. If problems such as missing or duplicated data occur, this function allows you to check whether or not the printer is receiving data correctly.

How to do hexadecimal dump printing

1. **Load paper.**
2. **While the paper cover is open, hold down the FEED button as you turn on printing power. Keep FEED button pressing until the POWER LED starts to flash, and then close the paper cover.**
3. **The printer will print "HEX dump print mode" followed by the received data printed in hexadecimal numbers and some characters.**

How to stop hexadecimal dump printing

Do one of the following to stop printing.

- Press the FEED button consecutively three times
- Turn off the power
- Receive a reset command from an interface

CAUTION

- The printer prints "." if there is no character corresponding to the data.
- None of the commands function during hexadecimal dump printing.
- If print data does not cover a complete line, press the FEED button to advance the paper.

Print example
HEX dump print mode

```
61 62 63 64 65 66 67 0A 0D 0D 0D 0D abcdefg.....
0D 0D 0D                                .....
```

4.5 Error Indications

- Paper end, paper near-end
  The end of the roll of paper is detected at two stages, paper near-end and paperend.
  When paper near-end is detected, the PAPER LED flashes. Prepare a new paper roll.
  When paper end is detected, the PAPER LED lights and the buzzer sounds. Load a new paper roll. Memory switch settings can be used to disable the buzzer.

- Cover Open
  If the cover is opened, the CUTTER LED lights and a buzzer sounds. The buzzer may not sound depending on the memory switch setting. Do not open the cover during printing. If the cover is accidentally opened, the CUTTER LED flashes. Check the paper, pull it straight out of the printer by a couple of centimeters, and then close the cover. Printing restarts. A command must be sent to restart printing depending on the memory switch setting.

- Cutter error
  If the auto cutter cannot move because of a paper jam or something else, the CUTTER LED flashes and the buzzer sounds. Remove the cause of the trouble and press the FEED button. If the auto cutter still does not move and the paper cover cannot be opened, refer to “Clearing a Cutter Error.”

Refer to 4.2 Clearing a Cutter Error

- Print head hot
  When you print dense characters, dark images, or for an extended time in a hot environment, the print head temperature increases. If the print head exceeds a specified temperature, the printer stops printing and waits for the print head to cool. When this happens, the PAPER LED, CUTTER LED, and COVER LED flash. Printing resumes automatically when the print head cools.

The status display for various messages is shown below.

Status	PAPER LED	CUTTER LED	COVER LED	SERVICE LED	Buzzer*1
Paper near-end		Unlit	Unlit	Unlit	No
Paper-end	Lit	Unlit	Unlit	Unlit	Yes*2
Cover open*3	Unlit	Unlit	Lit	Unlit	Yes*2
Cover open II*4	Unlit	Unlit		Unlit	Yes*2
Cutter locked	Unlit		Unlit	Unlit	Yes
Low-voltage error				Unlit	No
High-voltage error	Unlit	Unlit	Unlit		No
System error	Unlit	Unlit	Unlit		No
Memory error	Unlit	Unlit	Unlit		No
Print head hot				Unlit	No

Notes:
*1: Buzzer sounds when MSW5-1 (buzzer setting) is set to ON.
*2: MSW10-5 (buzzer event) can be configured to disable the buzzer.
*3: Indicated when a cover is opened during standby.
*4: Indicated when a cover is opened during standby.

4.6 Paper Jams

Take care to avoid obstruction of the paper outlet and paper jamming around the outlet during printing.
If paper cannot get out of the printer, it can roll up on the platen inside the printer and cause an error.
If the paper wraps around the platen, open the paper cover and carefully pull the paper out.

4.7 Precautions for Performing Printing for Which Printing Speed Changes

When printing for which the printing speed changes is performed, white lines may be printed or paper may not be fed depending on the printing conditions. To prevent these problems, change the following memory switch settings.

1. **Enable MSW2-3 (buffering).**
2. **Increase the baud rate of MSW7-1 (serial baud rate).**
3. **Change MSW10-2 (print speed) to a lower level.**

CAUTION

Depending on the serial interface transmission speed, ambient temperature, print data duty, and other factors, changing the above settings may not eliminate the problems.

5. OTHER

5.1 External Views and Dimensions

(Unit: mm)

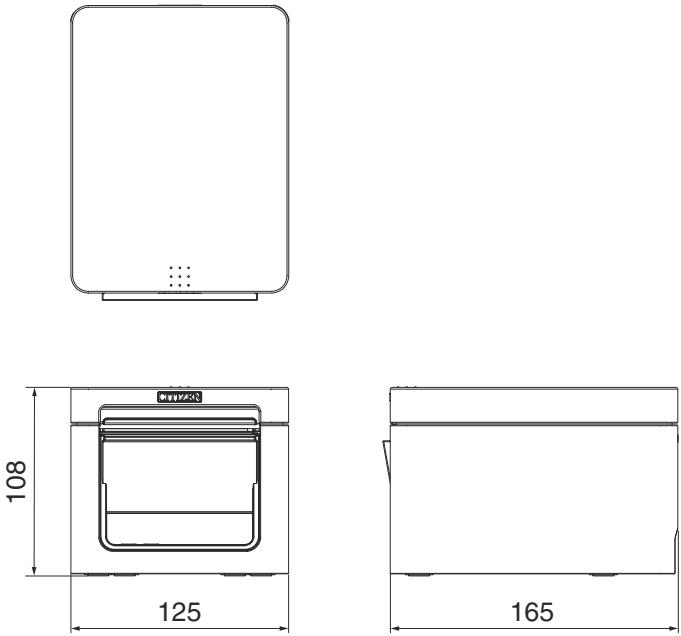

5.2 Printing Paper

Use the paper shown in the following table or paper of the same quality.

Paper type	Product name
Recommended thermal roll paper	Nippon Paper TP50KR-2Y, TP50KJ-R Oji Paper PD150R, PD160R, PD160R-63 Mitsubishi Paper Mills HP220AB-1, F230AA, P220AB Koehler KT48-FA

(Unit: mm)

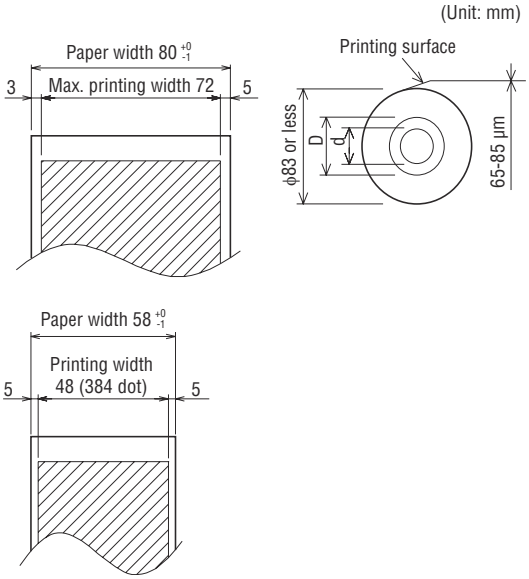

Paper thickness (μm)	53 to 85
Core inner diameter d (mm)	ø12
Core outer diameter D (mm)	ø18

CAUTION

Use thermal paper that is wound as follows:

- Not creased and fits tight to the core.
- Not folded.
- Not glued to the core.
- Rolled with the printable side out.

5.3 Manual Setting of Memory Switches

Memory switches are used to set various printer settings. Memory switches can be set manually, or by utilities or commands. This section explains how to perform manual settings.
For information on how to set the memory switches using commands, please refer to the Command Reference.

Individual setting mode

Set the memory switches individually.
Do the settings while confirming the memory switch function and settings on the print-out.

1. **Load paper.**
2. **While the paper cover is open, press and hold the FEED button and turn on the power.**
3. **Press the FEED button twice and close the paper cover.**
   The printer enters the mode for setting memory switches individually.
   The printer prints “Memory SW (1)” and the current setting, 0 (off) or 1 (on).
   (The current settings for memory switches 7 to 13 are not printed.)

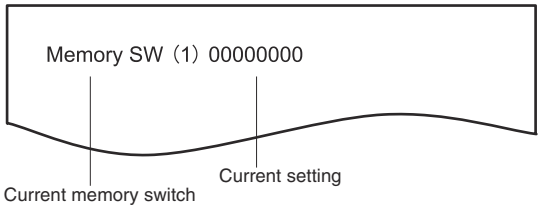

4. **Press the FEED button.**
   Each press of the FEED button cycles through the list of memory switches in the following sequence: “Memory SW (1)” > “Memory SW (2)” > ...“Memory SW (11)” or “Memory SW (13)” > “Save To Memory” > “Memory SW (1)”.
   Press the FEED button until the number for the memory switch you want to change is printed.
5. **Press the FEED button for at least two seconds.**
   A setting for the memory switch is printed, through the cycle, each time the FEED button is pressed for at least two seconds.
   Press the FEED button for at least two seconds to cycle through the list until the function of the memory switch you want to change is printed.

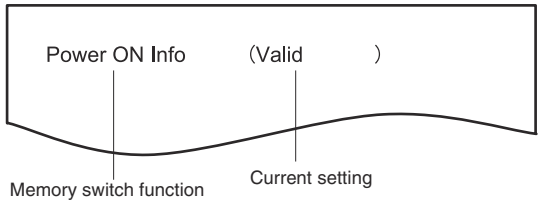

6. **Press the FEED button.**
   A setting is printed each time the FEED button is pressed in order through the cycle.
   When the current settings are printed, the COVER LED lights.
   Press the FEED button until the setting you want is printed.
7. **Press the FEED button for at least two seconds.**
   The selected settings are set.
   The next memory switch function and settings are printed.
8. **Repeat steps 5 to 7 to change different functions for the current memory switch number.**
9. **Open the paper cover and close it.**
   The changed memory switch settings are printed.
10. **Repeat steps 4 to 9 to change functions for a different memory switch number.**
11. **Press the FEED button until "Save To Memory" is printed.**
12. **Press the FEED button for at least two seconds.**
    The changed memory switch settings are saved and a list of them is printed.
    The printer exits individual setting mode when printing is finished.

Memory switch initialization

Set all the memory switches to the factory settings.

1. **Do steps 1 through 3 of the procedure to enter individual setting mode.**
2. **Press the FEED button until "Save To Memory" is printed.**
3. **Open the paper cover.**
4. **Press the FEED button for at least two seconds.**
   All memory switches change to the factory settings.
5. **Close the paper cover.**

The function of each memory switch is shown in the following table. (Shaded values are factory settings.)

Switch no.	Function	OFF	ON
MSW1-1	Power ON Info	Valid	Not Send
MSW1-2	Buffer Size	4K bytes	45 bytes
MSW1-3	Busy Condition	Full/Err	Full
MSW1-4	Receive Error	Print“?”	No Print
MSW1-5	CR Mode	Ignored	LF
MSW1-6	Reserved	Fixed	—
MSW1-7	DSR Signal	Invalid	Valid
MSW1-8	INIT Signal	Invalid	Valid
MSW2-1	Reserved	—	Fixed
MSW2-2	Auto Cutter	Invalid	Valid
MSW2-3	Spool Print	Invalid	Valid
MSW2-4	Full Col Print	LineFeed	WaitData
MSW2-5	Resume aft PE	Next	Top
MSW2-6	Reserved	Fixed	—
MSW2-7	Reserved	Fixed	—
MSW2-8	PNE Sensor	Valid	Invalid
MSW3-1	Resume Cttr Err	Valid	Invalid
MSW3-2	PE signal by PNE	Valid	Invalid
MSW3-3	Reserved	Fixed	—
MSW3-4	Reserved	Fixed	—
MSW3-5	Reserved	Fixed	—
MSW3-6	Reserved	Fixed	—
MSW3-7	CBM1000 Mode	Invalid	Valid
MSW3-8	Resume Open Err	Close	Command
MSW4-1	Reserved	Fixed	—
MSW4-2	Reserved	Fixed	—
MSW4-3	Feed&Cut at TOF	Invalid	Valid
MSW4-4	Reserved	Fixed	—
MSW4-5	Reserved	Fixed	—
MSW4-6	Reserved	Fixed	—
MSW4-7	Reserved	Fixed	—
MSW4-8	Partial Only	Invalid	Valid

Switch no.	Function	OFF	ON
MSW5-1	Buzzer	Valid	Invalid
MSW5-2	Line Pitch	1/360	1/406
MSW5-3	USB Mode	Virtual COM	Printer Class
MSW5-4	Reserved	Fixed	—
MSW5-5	Reserved	Fixed	—
MSW5-6	Reserved	Fixed	—
MSW5-7	Reserved	Fixed	—
MSW5-8	Reserved	Fixed	—
MSW6-1	Act. For Driver	Invalid	Valid
MSW6-2	Character Space	Invalid	Valid
MSW6-3	USB Power Save	Invalid	Valid
MSW6-4	Reserved	Fixed	—
MSW6-5	Reserved	Fixed	—
MSW6-6	Reserved	Fixed	—
MSW6-7	Reserved	Fixed	—
MSW6-8	Power ON trigger	Power switch ON	AC power input

Switch no.	Function	Initial setting	Setting value
MSW7-1	Baud Rate	9600 bps	1200 bps, 2400 bps, 4800 bps, 9600 bps, 19200 bps, 38400 bps, 57600 bps, 115200 bps
MSW7-2	Data Length	8bits	7bits, 8bits
MSW7-3	Stop Bit	1bit	1bit, 2bits
MSW7-4	Parity	NONE	NONE, ODD, EVEN
MSW7-5	Flow Control	DTR/DSR	DTR/DSR, XON/XOFF
MSW7-6	DMA Control	Valid	Valid, Invalid
MSW7-7	VCom Protocol	PC Setting	PC Setting, DTR/DSR, XON/XOFF
MSW8-1	Print Width	576 dots	576 dots, 546 dots, 512 dots, 420 dots, 390 dots, 384 dots, 360 dots
MSW8-3	Top Margin	11mm	3mm, 4mm, 5mm, 6mm, 7mm, 8mm, 9mm, 10mm, 11mm
MSW8-4	Line Gap Reduce	Invalid	Invalid, 3/4, 2/3, 1/2, 1/3, 1/4, 1/5, ALL
MSW8-5	Reduced Char V/H	100% / 100%	100% / 100%, 75% / 100%, 50% / 100%, 100% / 75%, 75% / 75%, 50% / 75%
MSW8-6	Auto Side Shift	Invalid	Invalid, 1 dot, 2 dots, 3 dots, 4 dots, 5 dots, 6 dots, 7 dots
MSW8-7	Liner Free Mode	Invalid	Disabled, 1 h, 6 h, 12 h, 18 h, 24 h, 5 m, 10 m 15 m, 20 m, 30 m

Switch no.	Function	Initial setting	Setting value
MSW9-1	Code Page	PC437	PC 437, Katakana, PC 850, PC 858, PC 860, PC 863, PC 865, PC 852, PC 866, PC 857, WPC1252, Space page, PC 864, ThaiCode11 1Pass, ThaiCode11 3Pass, ThaiCode18 1Pass, ThaiCode18 3Pass, TCVN-3
MSW9-2	Int'Char Set	U.S.A	USA, France, Germany, England, Denmark, Sweden, Italy, Spain, Japan, Norway, Denmark 2, Spain 2, Latin America, Korea, Croatia, China, Vietnam
MSW9-4	Kanji code	Invalid	Disabled, JIS (Japan), SJIS: CP932 (Japan), SJIS: X0213 (Japan), GB18030 (China), KS Hangul (South Korea), EUC Hangul (South Korea), BIG5 (Taiwan)
MSW10-1	Print Density	100 %	70 %, 75 %, 80 %, 85 %, 90 %, 95 %, 100 %, 105 %, 110 %, 115 %, 120 %, 125 %, 130 %, 135 %, 140 %
MSW10-2	Print Speed	Level 9	Level 1, Level 2, Level 3, Level 4, Level 5, Level 6, Level 7, Level 8, Level 9
MSW10-4	Old Command	Invalid	Invalid, CBM1, CBM2
MSW10-5	Buzzer Event	Not By C. Open	All Event/Error, Not by C.Open, Not by C.Open/PE
MSW10-6	Buzzer Sound	Tone 2	Tone 1, Tone 2, Tone 3, Tone 4
MSW13-1	Security/Target	Low/All	Low/All, Mid/All, Mid/Paired only, Hi/All, Hi/Paired only
MSW13-5	BT Device Scan	Discoverable	No Response, Discoverable
MSW13-6	Auto Reconnect	Valid	Valid | Invalid, Valid

CITIZEN SYSTEMS AMERICA CORPORATION

363 Van Ness Way, Suite 404 Torrance, CA 90501. USA
Tel: (310) 781-1460 Fax:(310) 781-9152
http://www.citizen-systems.com

CITIZEN SYSTEMS EUROPE GmbH

Otto-Hirsch-Brücken 17
70329 Stuttgart
Germany
Tel: +49 (0) 711 49032-0
Fax:+49 (0) 711 49032-45

Elizabeth House, 56-60 London Road
Staines-Upon-Thames, TW18 4HF
United Kingdom
Tel: +44 (0) 20 8893 1900
Fax:+44 (0) 20 8893 0080

http://www.citizen-europe.com

CITIZEN SYSTEMS JAPAN CO., LTD.

6-1-12, Tanashi-cho, Nishi-Tokyo-shi Tokyo, 188-8511. Japan
Tel: +81 (0) 42 468 4608 Fax:+81 (0) 42 468 4687
http://www.citizen-systems.co.jp

CT-E651_UM_100_EN
PMC-1706
June 2017