StarTech.com
Hard-to-find made easy®

Single-Monitor Mount - Articulating Arm

ARMPIVOTB

*actual product may vary from photos

FR: Guide de l'utilisateur - fr.startech.com
DE: Bedienungsanleitung - de.startech.com
ES: Guía del usuario - es.startech.com
NL: Gebruiksaanwijzing - nl.startech.com
PT: Guia do usuário - pt.startech.com
IT: Guida per l'uso - it.startech.com

For the latest information, technical specifications, and support for this product, please visit www.StarTech.com/ARMPIVOTB.

Manual Revision: 12/04/2018

Use of Trademarks, Registered Trademarks, and other Protected Names and Symbols

PHILLIPS® is a registered trademark of Phillips Screw Company in the United States or other countries.

This manual may make reference to trademarks, registered trademarks, and other protected names and/or symbols of third-party companies not related in any way to StarTech.com. Where they occur these references are for illustrative purposes only and do not represent an endorsement of a product or service by StarTech.com, or an endorsement of the product(s) to which this manual applies by the third-party company in question. Regardless of any direct acknowledgement elsewhere in the body of this document, StarTech.com hereby acknowledges that all trademarks, registered trademarks, service marks, and other protected names and/or symbols contained in this manual and related documents are the property of their respective holders.

Warning statements

Make sure to assemble this product according to the instructions. Failure to do so might result in personal injury or property damage.

Make sure that the weight of the monitor doesn't exceed the weight capacity of this product. If you exceed the weight capacity, you might experience personal injury or damage to the equipment. This product can support the following weight: 17.6 lb. (8 kg).

Never operate this product if parts are missing or damaged.

Varningsmeddelanden

Se till att du monterar produkten i enlighet med instruktionerna. Om du inte gör det kan skada på person eller egendom uppstå.

Se till att skärmens vikt inte överstiger produktens viktkapacitet. Om viktkapaciteten överstigs kan skada på person eller utrustning uppstå. Denna produkt har stöd för följande vikter: 8 kg.

Använd aldrig produkten om delar saknas eller är skadade.

Avertissements

Assemblez ce produit conformément aux instructions. Si vous ne respectez pas ces instructions, vous risquez de vous blesser ou d'endommager l'équipement.

Vérifiez que le poids du moniteur ne dépasse pas la capacité pondérale du produit. Si vous dépassez la capacité pondérale, vous risquez des blessures corporelles ou des dommages matériels. Ce produit peut supporter 8 kg.

N'utilisez pas ce produit si des pièces sont endommagées ou manquantes.

Warnhinweise

Montieren Sie dieses Produkt gemäß den Anweisungen. Anderenfalls kann dies zu Verletzungen von Personen oder Schäden an Eigentum führen.

Das Gewicht des Monitors darf die zulässige Traglast des Produkts nicht übersteigen. Wenn die Traglast überschritten wird, kann dies zu Verletzungen von Personen oder Schäden an Geräten führen. Dieses Produkt ist für folgendes Gewicht geeignet: 8 kg.

Das Produkt darf nicht bedient werden, wenn Teile fehlen oder beschädigt sind.

Dichiarazioni di avvertenza

Assemblare il prodotto rispettando le istruzioni. Il mancato rispetto delle istruzioni potrebbe causare danni a persone o proprietà.

Verificare che il peso del monitor non superi la capacità di supporto del prodotto. In caso di superamento della capacità di supporto potrebbero verificarsi danni a persone o apparecchiature. Il prodotto è in grado di supportare i seguenti pesi: 8 kg.

Non utilizzare il prodotto in presenza di parti mancanti o danneggiate.

Mensagens de aviso

Certifique-se de que monta este produto de acordo com as instruções. O incumprimento pode resultar em ferimentos pessoais ou danos de propriedade.

Certifique-se de que o peso do monitor não excede a capacidade de peso deste produto. Se exceder a capacidade de peso, pode sofrer ferimentos pessoais ou danos no equipamento. Este produto pode suportar o seguinte peso: 8 kg.

Nunca opere este produto se faltarem peças ou estas estiverem danificadas.

Advertencias de uso

Asegúrese de ensamblar este producto según las instrucciones. De lo contrario, pueden producirse lesiones personales o daños de propiedad.

Asegúrese de que el peso del monitor no exceda la capacidad de carga de este producto. Si se excede dicha capacidad se podrían producirse lesiones personales o daños al equipo. Este producto tiene capicidad para el siguiente peso: 8 kg.

Nunca opere o ponga en funcionamiento este producto si faltan piezas o hay daños en las mismas.

Waarschuwingen

Zorg dat dit product volgens de instructies in elkaar wordt gezet. Indien dit niet goed gebeurt kan lichamelijk letsel of materiële schade ontstaan.

Zorg dat het gewicht van het scherm de maximale capaciteit van dit product niet overschrijdt. Als u de gewichtscapaciteit overschrijdt, kan persoonlijk letsel of schade aan de apparatuur ontstaan. Dit product ondersteunt het volgende gewicht: 8 kg.

Gebruik dit product nooit als er onderdelen ontbreken of beschadigd zijn.

注意

必ず取扱説明書に従って本製品の組み立てを行って下さい。取り扱いを誤った場合に、傷害を負う恐れや物的損害が発生する恐れがあります。

取り付けるモニターの重量が、本製品で定められた最大積載重量を超えないようにして下さい。最大積載重量をオーバーした場合、傷害を負う恐れやモニターや本製品に損害が発生する恐れがあります。本製品は、モニター1台あたり8kgまで支持できます。

本製品で使用している部品の一部が紛失していたり損傷している状態で使用するのは絶対に止めて下さい。

Table of Contents

Warnings i

Introduction 1

Product diagram 1

Product dimensions 2

Technical specifications 3

Package contents 4

Requirements 6

Assembly 7

Attach the ARMPIVOTB to your mounting surface 7

Attach the monitor arm 11

Attach a monitor to the monitor arm 12

Adjust the tilt angle of your monitor 16

Organize your cables 17

Technical support 18

Warranty information 18

Introduction

You can use the ARMPIVOTB to position a single monitor in a way that works best in your setup and allows for comfortable viewing. The monitor arm extends and can support monitors between 13 and 27 inches in size. This monitor arm includes desk and grommet mounting options, and features a straightforward assembly process. ARMPIVOTB can support monitors up to 8 kg (17.6 lb.) in weight.

Product diagram

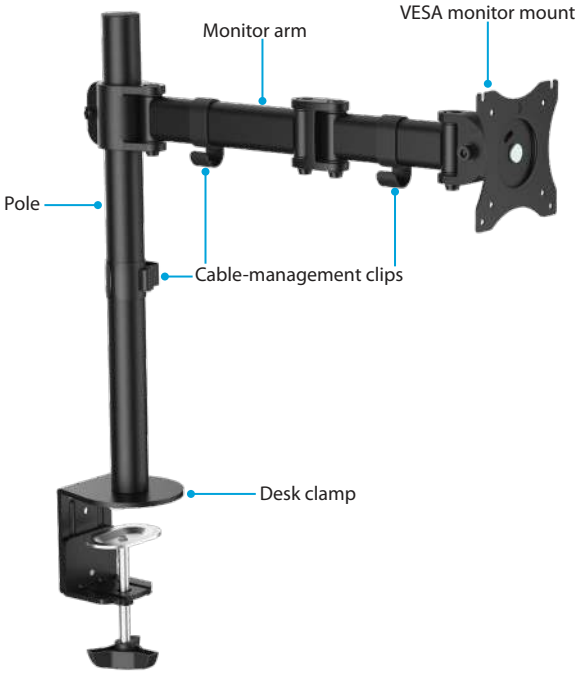

Product dimensions

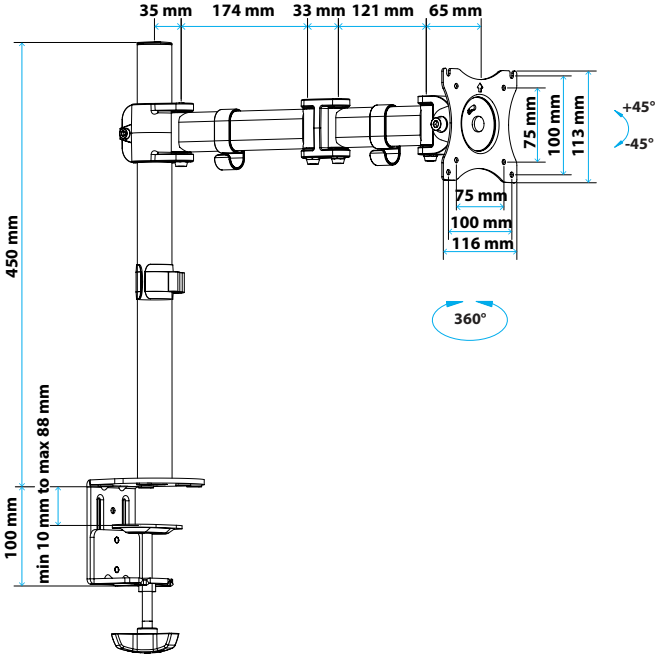

Technical specifications

Type of measurement	Measurement
VESA mounting hole pattern 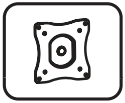	75x75 100x100
Weight capacity	Up to 8 kg (17.6 lb.)
Tilt	+45º to -45º
Screen size 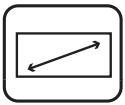	Maximum 685.8 mm (27 in.)
Rotate 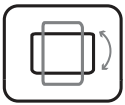	360º
Swivel	180º

Package contents

1

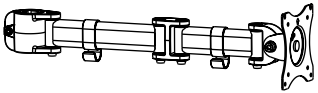

Monitor arm

Qty: One

2

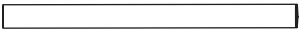

Pole

Qty: One

3

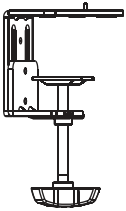

Desk clamp

Qty: One

4

Desk-clamp screw

Qty: One

5

Grommet baseplate

Qty: One

6

Grommet plate

Qty: One

7

Rubber pads

Qty: Five

8

Cable-management clip

Qty: One

9

5 mm hex key

Qty: One

10

6 mm hex key

Qty: One

11

M4x12 mm screws

Qty: Four

12

M5x12 mm screws

Qty: Four

13

Washers

Qty: Four

14

Instruction manual

Qty: One

Requirements

- A monitor or display that's compatible with a VESA mount
- A Phillips screwdriver

Requirements are subject to change. For the latest requirements, please visit www.StarTech.com/ARMPIVOTB.

Assembly

Attach the ARMPIVOTB to your mounting surface

You can use either the desk clamp or grommet mount to attach the ARMPIVOTB to your mounting surface.

Use the desk clamp to attach the ARMPIVOTB

Warning! Make sure that the weight of the monitor doesn't exceed the weight capacity of this product. If you exceed the weight capacity, you might experience personal injury or damage to the product. This product can support the following weight: Up to 8 kg (17.6 lb.).

1. Remove the backing from the five **rubber pads** (**7**) and affix them to the underside of the **desk clamp** (**3**). (*figure 1*)

figure 1

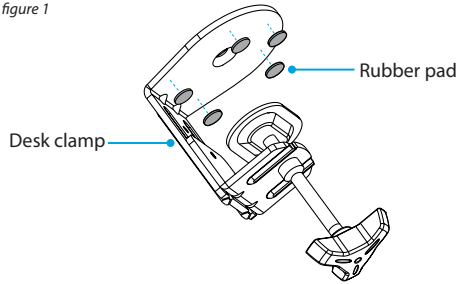

2. Position the **pole** (**2**) over the hole in the top of the **desk clamp** so that the **projection** on the **desk clamp** fits into one of the two holes on the **pole**. (*figure 2*)

figure 2

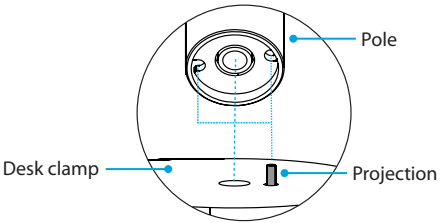

StarTech.com
Hard-to-find made easy®

3. Insert the **desk-clamp screw** (**4**) through the **desk clamp** and into the **pole**.
4. Use the **6 mm hex key** (**10**) to tighten the **desk-clamp screw**. (*figure 3*)

figure 3

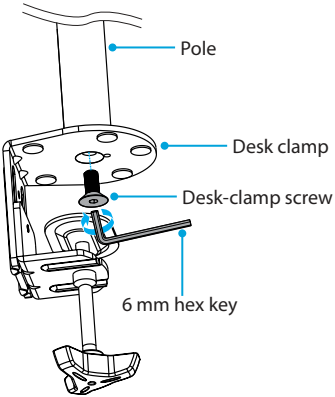

5. Turn the knob on the **desk clamp** counterclockwise until you reach the thickness of the mounting surface that you're attaching the ARMPIVOTB to.
6. Slide the **desk clamp** over the edge of the desk or table.
7. Turn the knob clockwise to tighten the **desk clamp**. (*figure 4*)

figure 4

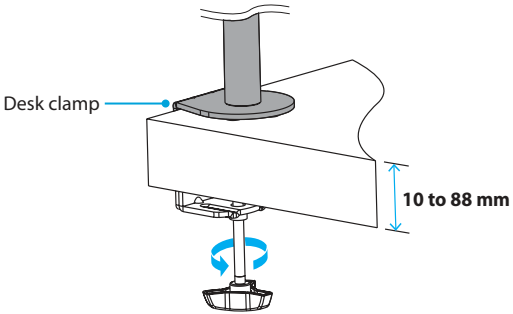

Use the grommet mount to attach the ARMPIVOTB

Warning! Make sure that the weight of the monitor doesn't exceed the weight capacity of this product. This product can support the following weight: Up to 8 kg (17.6 lb.).

Using the grommet mount to attach the ARMPIVOTB requires the assistance of a second person.

1. Thread a **Phillips screwdriver** through the hole in the top of the **desk clamp** (**3**) and unscrew the **screw** from the **plate** and **rod**.
2. Remove the **rod** from the bottom of the **desk clamp**. (*figure 5*)

Tip! Keep the screw, plate, and rod in a safe place so that you can use them again if you want to switch back to the desk clamp mount.

figure 5

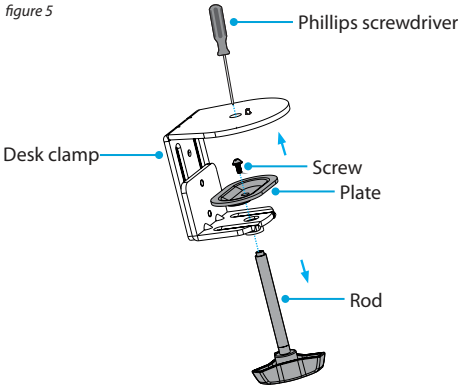

3. Remove the backing from the five **rubber pads** (**7**) and affix them to the underside of the **grommet baseplate** (**5**). (*figure 6*)

figure 6

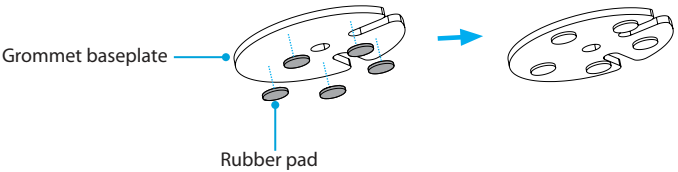

StarTech.com
Hard-to-find made easy®

4. Position the **grommet baseplate** over the grommet hole in the mounting surface, and position the **pole** (**2**) over the **grommet baseplate** so that the **projection** on the **grommet baseplate** fits into one of the two holes on the **pole**. (*figure 7*)

figure 7

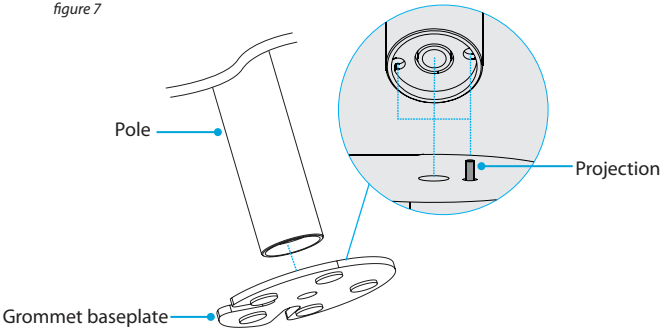

5. Thread the **grommet plate** (6) onto the **rod**.
6. While another person holds the **pole** and the **grommet plate** upright, on the underside of the mounting surface, thread the **rod** up through the grommet hole and into the **pole**.
7. Turn the knob clockwise to tighten the grommet mount. (*figure 8*)

figure 8

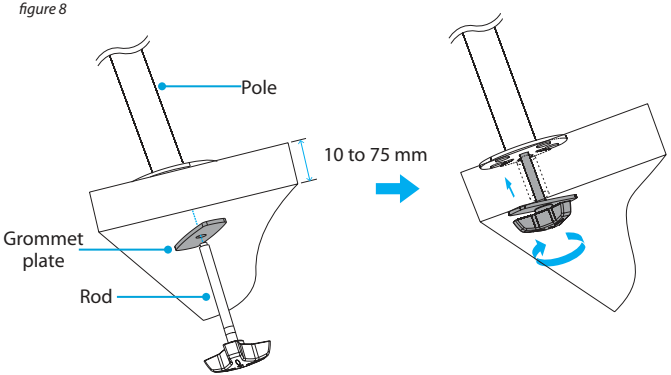

Attach the monitor arm

1. Slide the **cable-management clip** (**8**) down the **pole** (**2**). (*figure 9*)

figure 9

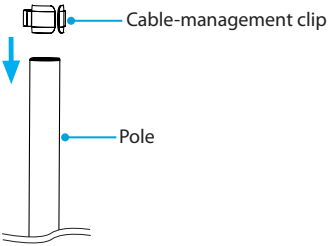

2. Slide the **monitor arm** (**1**) down the **pole**.
3. When the **monitor arm** is at the required height, use the **5 mm hex key** (**9**) to tighten the screw in the side of the **monitor arm**. (*figure 10*)

figure 10

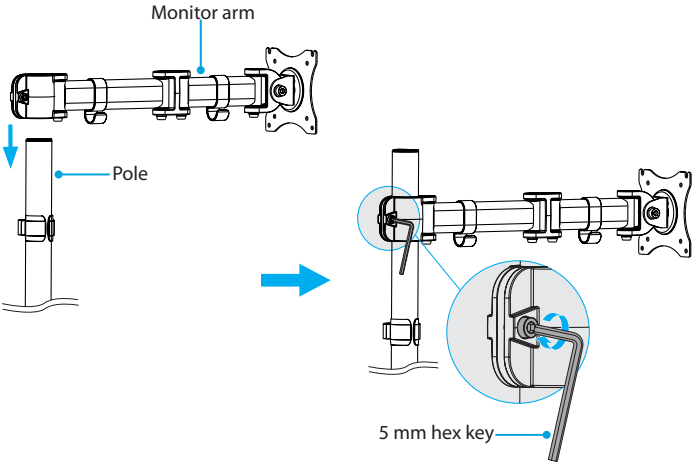

StarTech.com
Hard-to-find made easy®

Attach a monitor to the monitor arm

Warning! Attaching a monitor is a two-person job. Do not attempt to complete this task by yourself.

To accommodate different monitors, the VESA mount on the mounting arm features a 100x100 and a 75x75 mounting hole pattern.

Use the 100x100 VESA mounting hole pattern to attach a monitor

To accommodate different monitor sizes, the ARMPIVOTB comes with two sets of screws that are different lengths and diameters.

To select the appropriate screws for the type of monitor that you're using, complete the following:

- Determine the depth of the mounting holes on the monitor.
- Determine the diameter of the mounting holes on the monitor.

1. Place two of the **washers** (**13**) over the top two mounting holes on the back of the monitor.
2. Insert two of the **M4x12 mm screws** (**11**) or **M5x12 mm screws** (**12**) through the **washers** and into the back of the monitor. (*figure 11*)

Caution! At this point in the assembly, do not tighten the screws so that they are flush against the monitor. To attach the monitor to the **monitor arm**, the screws must remain a little bit loose.

figure 11

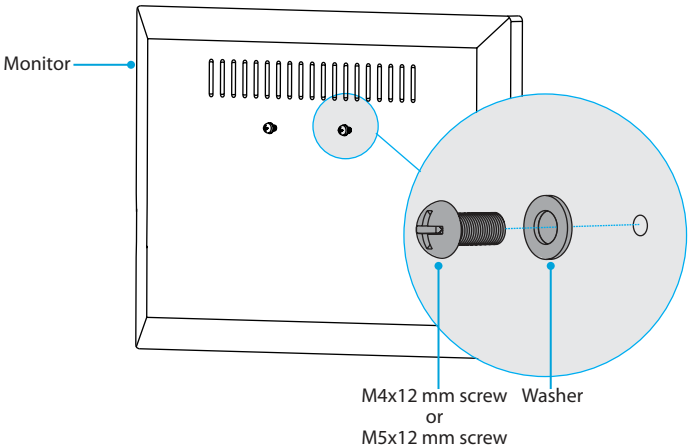

StarTech.com
Hard-to-find made easy®

3. Carefully hook the screws into the top two slots on the **VESA monitor mount** on the **monitor arm**. (*figure 12*)

Caution! If the **monitor arm** starts to slip down the **pole** (**2**) when you add the weight of the monitor, remove the monitor and use the **5 mm hex key** (**9**) to tighten the screw in the side of the **monitor arm**. When the screw is tightened, repeat step 3 to reattach the monitor.

figure 12

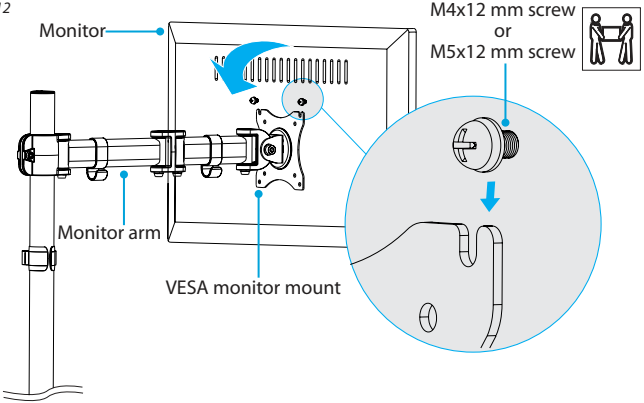

4. Use a Phillips screwdriver to tighten the screws. (*figure 13*)

Warning! Do not over-tighten the screws. If you encounter resistance while you're tightening the screws, stop tightening. Failure to do so could result in damage to the monitor.

figure 13

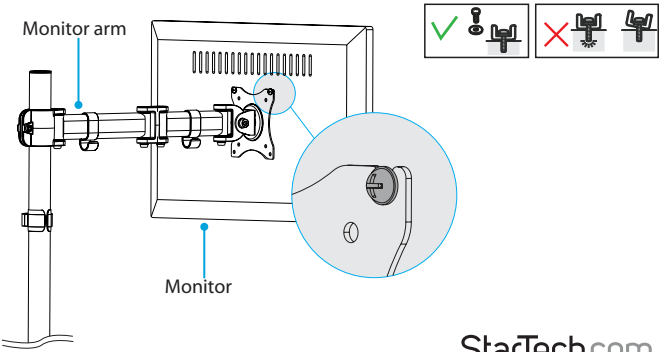

5. Place the other two **washers** over the mounting holes in the **VESA monitor mount** on the **monitor arm**.
6. Insert the other two **M4x12 mm screws** or **M5x12 mm screws** through the **washers**, the mounting holes in the **VESA monitor mount**, and into the back of the **monitor**. (*figure 14*)

Warning! Do not over-tighten the screws. If you encounter resistance while you're tightening the screws, stop tightening. Failure to do so could result in damage to the monitor.

figure 14

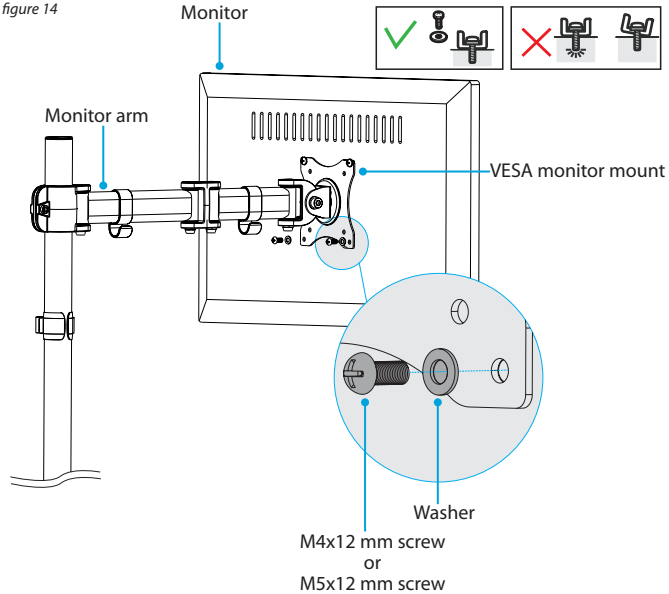

StarTech.com
Hard-to-find made easy®

Use the 75x75 VESA mounting hole pattern to attach a monitor

To accommodate different monitor sizes, the ARMPIVOTB comes with two sets of screws that are different lengths and diameters.

To select the appropriate screws for the type of monitor that you're using, complete the following:

- Determine the depth of the mounting holes on the monitor.
- Determine the diameter of the mounting holes on the monitor.

1. Line up the mounting holes on the back of the monitor with the 75x75 mounting holes in the **VESA monitor mount** on the **monitor arm** (**1**).
2. While someone holds the monitor in place, insert the **M4x12 mm screws** (**11**) or **M5x12 mm screws** (**12**) through the **washers** (**13**), the mounting holes in the **VESA monitor mount**, and into the back of the monitor. (*figure 15*)

Caution! If the **monitor arm** starts to slip down the **pole** (**2**) when you add the weight of the monitor, remove the monitor and use the **5 mm hex key** (**9**) to tighten the screw in the side of the **monitor arm**. When the screw is tightened, repeat step 3 to reattach the monitor.

3. Use a Phillips screwdriver to tighten the screws.

Warning! Do not over-tighten the screws. If you encounter resistance while you're tightening the screws, stop tightening. Failure to do so could result in damage to the monitor.

figure 15

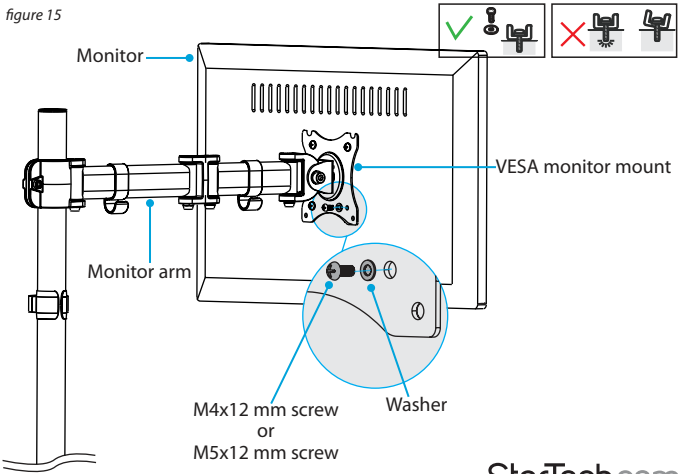

StarTech.com
Hard-to-find made easy®

Adjust the tilt angle of your monitor

1. To change the angle that the monitor is tilted at, use the **6 mm hex key** (**10**) to turn the screw in the side of the VESA monitor mount counterclockwise.
2. When the screw is loose, position the monitor at the angle that works best for you.
3. Use the **6 mm hex key** to turn the screw clockwise to tighten it. (*figure 16*)

figure 16

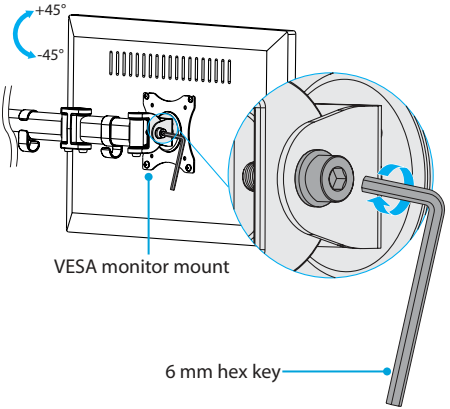

4. When you're done adjusting the tilt angle, you can store the **5 mm hex key** (**9**) and the **6 mm hex key** in the **hex key holder** in the **cable-management clip** (**8**). (*figure 17*)

figure 17

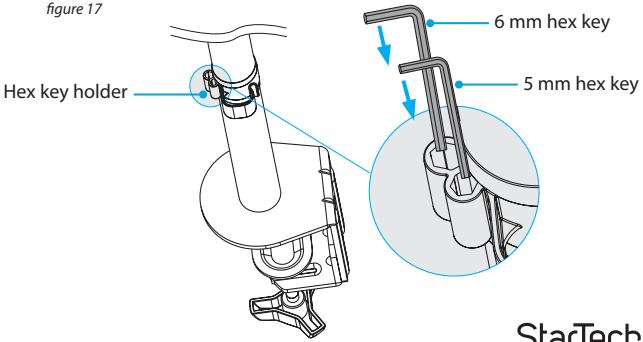

StarTech.com
Hard-to-find made easy®

Organize your cables

You can use the cable-management clips on the ARMPIVOTB to organize your cables and help to keep your work area free from cable clutter.

1. Position the cable from your monitor in the hooks in the **cable-management clips** along the **monitor arm** (**1**).
2. Run the cable down the **pole** (**2**) and through the **cable-management clip** (**8**). (*figure 18*)

figure 18

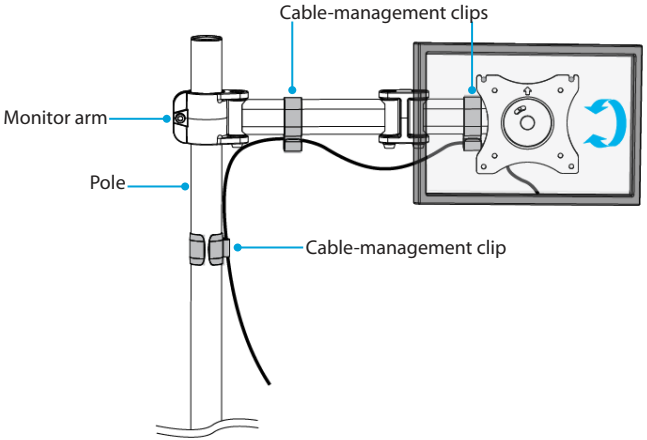

StarTech.com
Hard-to-find made easy®

Technical support

StarTech.com's lifetime technical support is an integral part of our commitment to provide industry-leading solutions. If you ever need help with your product, visit **www.startech.com/support** and access our comprehensive selection of online tools, documentation, and downloads.

For the latest drivers/software, please visit **www.startech.com/downloads**

Warranty information

This product is backed by a five-year warranty.

StarTech.com warrants its products against defects in materials and workmanship for the periods noted, following the initial date of purchase. During this period, the products may be returned for repair, or replacement with equivalent products at our discretion. The warranty covers parts and labor costs only. StarTech.com does not warrant its products from defects or damages arising from misuse, abuse, alteration, or normal wear and tear.

Limitation of liability

In no event shall the liability of StarTech.com Ltd. and StarTech.com USA LLP (or their officers, directors, employees or agents) for any damages (whether direct or indirect, special, punitive, incidental, consequential, or otherwise), loss of profits, loss of business, or any pecuniary loss, arising out of or related to the use of the product exceed the actual price paid for the product. Some states do not allow the exclusion or limitation of incidental or consequential damages. If such laws apply, the limitations or exclusions contained in this statement may not apply to you.

Hard-to-find made easy. At StarTech.com, that isn't a slogan. It's a promise.

StarTech.com is your one-stop source for every connectivity part you need. From the latest technology to legacy products — and all the parts that bridge the old and new — we can help you find the parts that connect your solutions.

We make it easy to locate the parts, and we quickly deliver them wherever they need to go. Just talk to one of our tech advisors or visit our website. You'll be connected to the products you need in no time.

Visit www.startech.com for complete information on all StarTech.com products and to access exclusive resources and time-saving tools.

StarTech.com is an ISO 9001 Registered manufacturer of connectivity and technology parts. StarTech.com was founded in 1985 and has operations in the United States, Canada, the United Kingdom and Taiwan servicing a worldwide market.