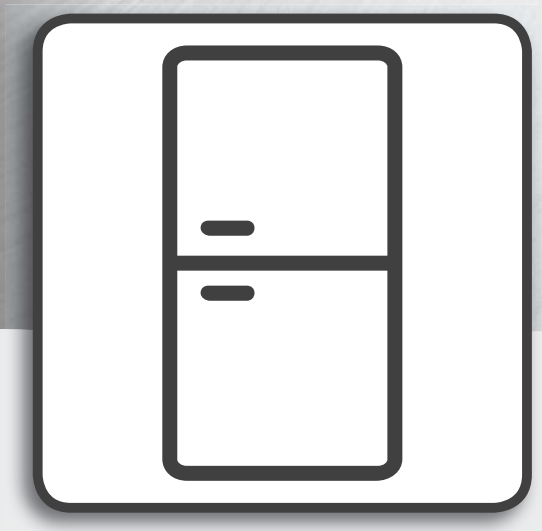

User Manual

USER MANUAL

INDEX

Use & Care guide **3**
Refrigerator light 3
Replacing the LED light 3
Shelves 3
Door. 3
How to use the appliance 4
First time use 4
Refrigerator compartment and food storage 4
How to store fresh food and beverages 4
Removing the fridge drawer. 5
Freezer compartment food storage 6
Storage times for home frozen foods 7
Functional sounds 8
Recommendation in case of no use of the appliance 8
Cleaning and maintenance 8
Accessories *. 9
Humidity control * 9
Tuck shelf * 9
Freezer pad (Alu PAD)* 9
Refrigerator pad* 9
Gasket replacement 10

Refrigerator light

The light system inside the refrigerator compartment uses LED lights, allowing a better lighting than traditional light bulbs as well as providing a very low energy consumption. Contact the Technical Assistance Service if you need a replacement.
Important: The refrigerator compartment light switches on when the refrigerator door is opened.

Replacing the LED light

Always disconnect the appliance from the power supply before replacing the light bulb. Then follow the instructions based on the type of light bulb for your product. Replace the light bulb with one with the same features, available from the Technical Assistance Service and authorised sellers.
If you need to replace the LED lights, please contact the Technical Assistance Service.

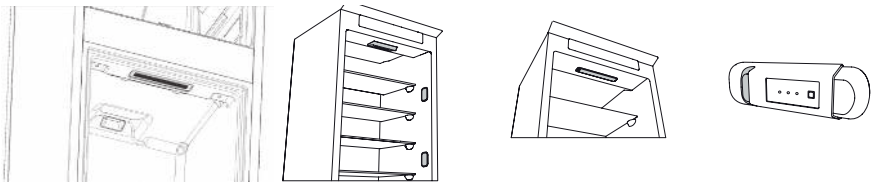

Shelves

All of the drawers, door shelves and shelves can be removed.

Door

Door reversibility
Note: the direction of door opening can be changed. If this operation is performed by the After-sales Service it is not covered by the warranty.
Follow the instructions in the **Installation Guide.**

How to use the appliance

First time use

Wait at least two hours, after the installation, before connecting the appliance to the power supply. Connecting the appliance to the power supply starts the operation automatically. The ideal storage temperatures for the food are preset in the factory. After turning the appliance on, you must wait for 4-6 hours for the correct storage temperature to be reached for a normally filled appliance. Position the antibacterial anti-odour filter in the fan as demonstrated in the filter packaging (if available). If the acoustic signal sounds, it means that the temperature alarm was activated: press the button to switch off the acoustic alarm.

Refrigerator compartment and food storage

The refrigerator compartment allows for the storage of fresh food and drink. The refrigerator compartment defrosts completely automatically. The occasional presence of drops of water on the internal back wall of the compartment is a sign of the automatic defrosting phase. The defrosting water is channelled into a drain and then collected in a container, where it evaporates.

Note: the ambient temperature, how often the doors are opened and the position of the appliance may affect the internal temperatures in the two compartments. Set the temperatures according to these factors. In very humid conditions, condensation may form in the refrigerator compartment, especially on the glass shelves. In this case, it is recommended that you close containers with liquids in (e.g. a pot of stock), wrap up food with a high water content (e.g. vegetables) and turn on the fan, if there is one. All of the drawers, door shelves and shelves can be removed.

Multiflow Air Distribution
The multiflow helps to distribute evenly the cold air in the cavity for better food preservation. Food can be placed on any shelf of the appliance. Please be careful not to obstruct the air distribution vents thus ensuring its free movement.

How to store fresh food and beverages

Foods which give off a large amount of ethylene gas (apples, apricots, pears, peaches, avocados, figs, prunes, blueberries, melons, beans) and those that are sensitive to this gas, such as fruit, vegetables and salad, should always be kept separated or wrapped so as not to reduce their storage life; for example do not store tomatoes together with kiwi fruits or cabbage. Do not store food too close together to enable sufficient air circulation. Use recyclable plastic, metal, aluminium, glass containers and cling film to wrap foods.
If you have a little quantity of food to store in the refrigerator, we recommend to use the shelves above the crisper for fruits and vegetables since this is the coolest area of the compartment. Always use closed containers for liquids and for food that may give off or be tainted by odour or flavour transfer or cover them. To avoid bottles falling over, you can use the bottle holder (available on selected models).

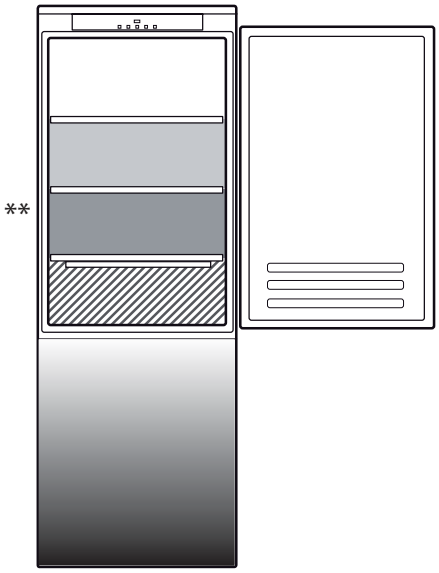

Legend

ZONE
Suggested for the storage of tropical fruit, cans, drinks, eggs, sauces, pickles, butter, jam

COOL ZONE
Suggested for the storage of cheese, milk, daily food, delicatessen, yoghurt

COOLEST AREA
Suggested for the storage of cold cuts, desserts, meat and fish

FRUIT & VEGETABLE DRAWER

** For models with "0° ZONE" COMPARTMENT the "coolest area" is the one highlighted in the legend

Removing the fridge drawer

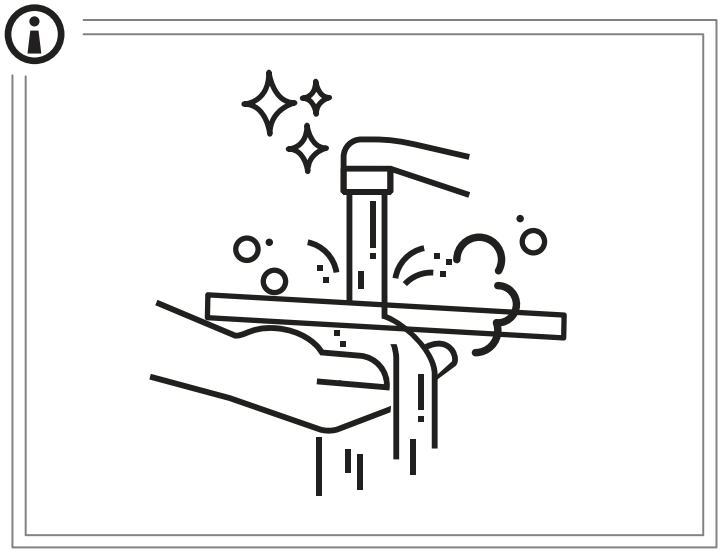

1

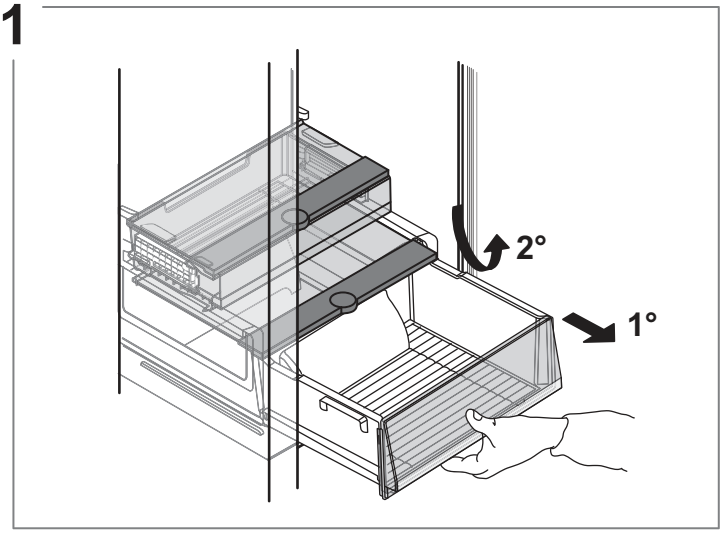

2

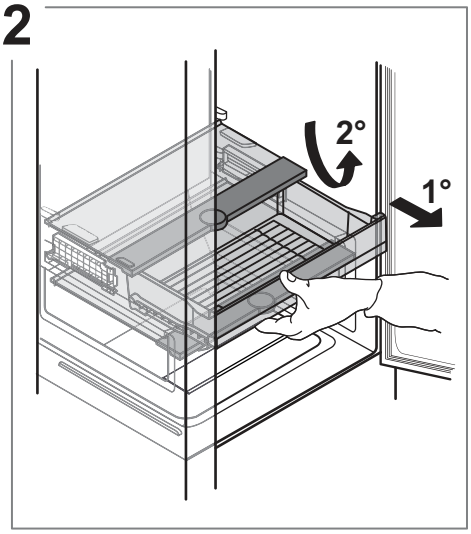

3

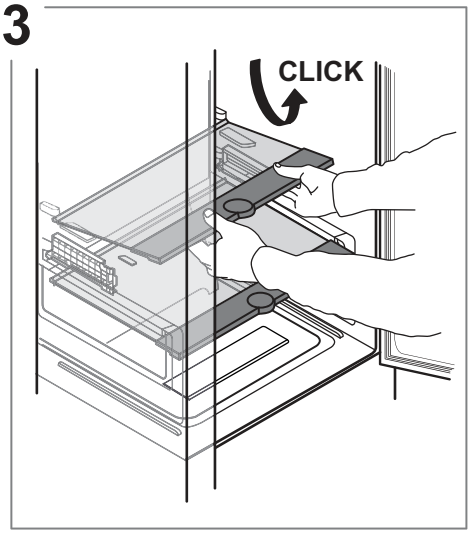

4

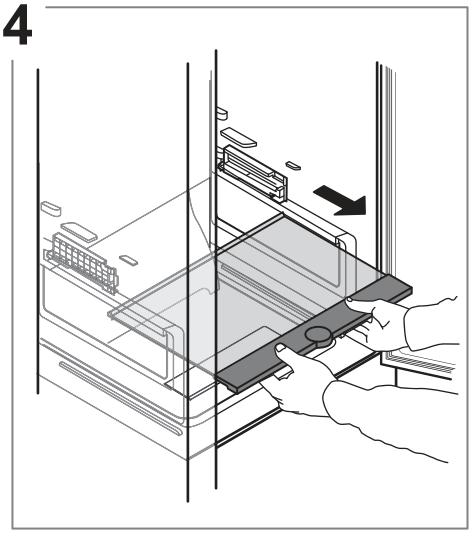

5

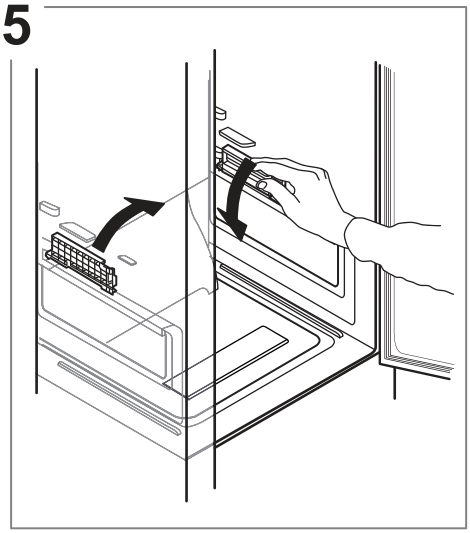

6

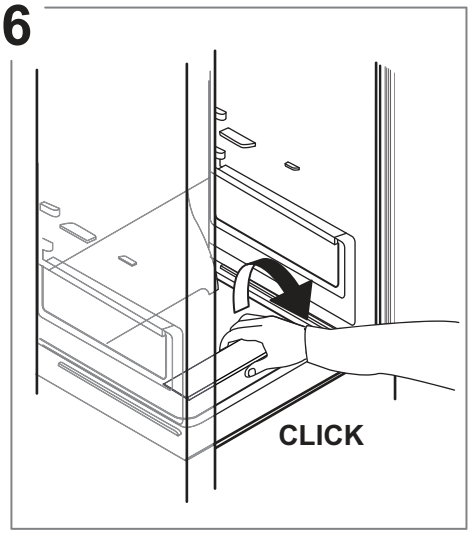

7

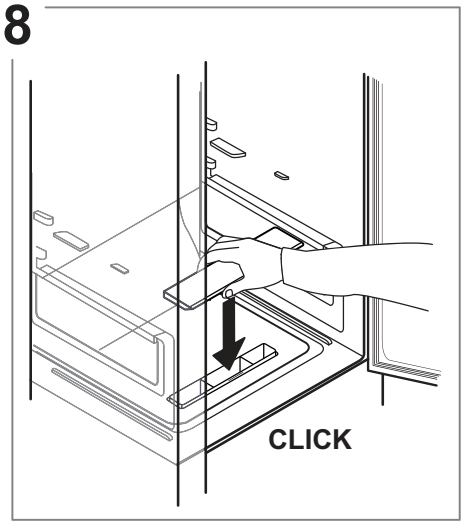

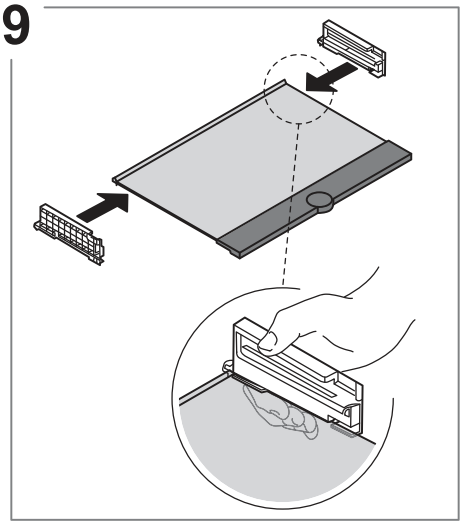

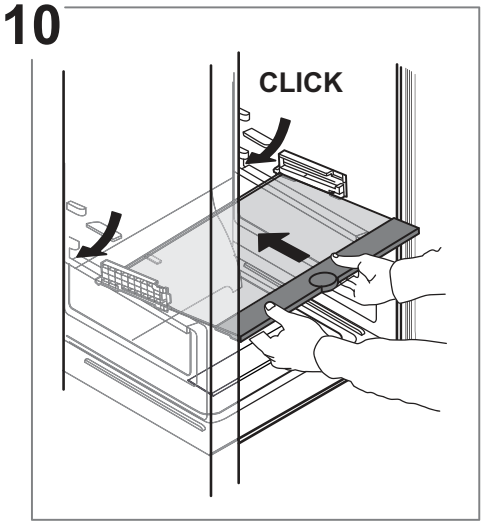

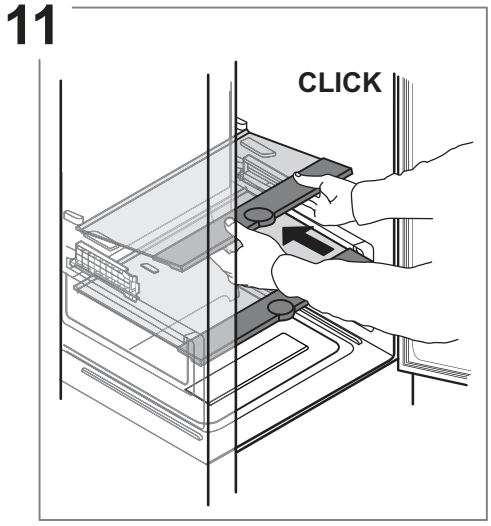

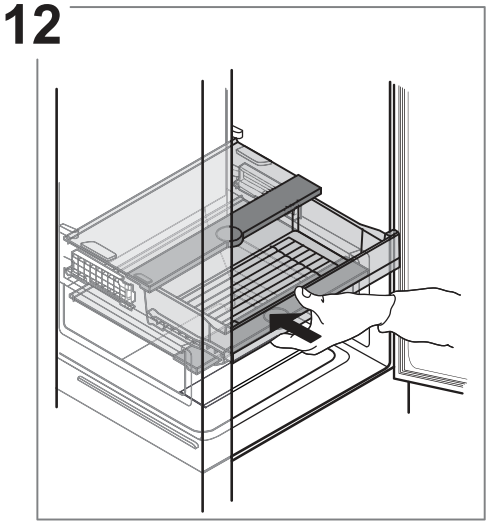

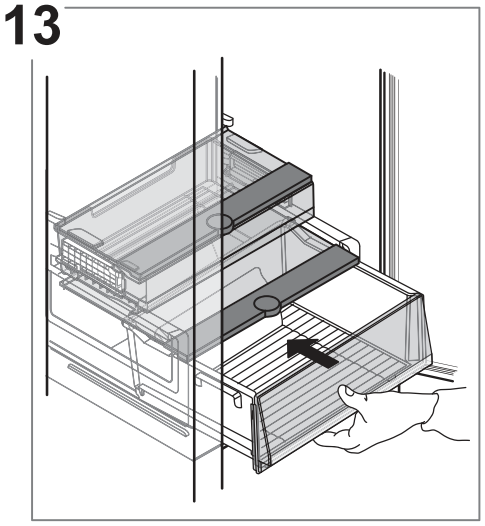

Freezer compartment food storage

The freezer compartment ✱*** allows for long time storage of frozen food and freezing of fresh food. The quantity of fresh food that can be frozen in 24 hours is written on the rating plate. Arrange the fresh food in the freezing area inside the freezer compartment, leaving enough space around the food packages to allow air to circulate freely. It is advisable that you do not re-freeze food that has been partially defrosted. It is important to wrap the food in a way that prevents the penetration of water, humidity or condensation.

Tray*
The freezer tray is useful to easily access frequently used products, to freeze or simply store leftovers or small items.

Ice cubes
Fill 2/3 of the ice tray with water and put it back in the freezer compartment. Do not use sharp or pointed objects to remove the ice under any circumstances.

Removing the drawers
Pull the drawers outwards as far as they will go, lift them up and remove them. To get more volume, the freezer compartment can be used without the drawers. Make sure that the door is closed properly after putting the food back on the grilles/shelves.

Total No Frost system

The Total No Frost system effectively prevents ice formation, avoiding the hassle of manual defrosting both in the freezer and fridge cavity.
Its ventilation system provides perfect circulation of cold air in both cavities thus avoiding ice build-up.

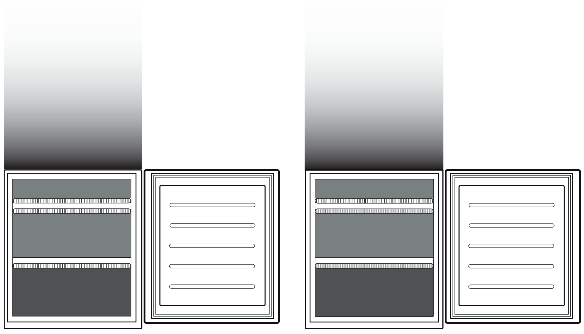

***

Legend

FREEZER DRAWER

FREEZING ZONE DRAWER
(MAX COOL ZONE) Suggested to freeze fresh/cooked food.

*** Only for CB310 and CB380 models (refer to the rating plate located at the side of the fruit and vegetable drawer)

Storage times for home frozen foods

FROZEN COMPARTMENT

Product	Storage period (-12°C)	Recommended storage period (-18°C)	Storage period (-24°C)
Butter or margarine	1 month	6 months	9 months
Fish	1 month	1-3 months	6 months
Fruit (except citrus) & vegetables	1 month	8-12 months	12 months
Meat Ham-sausages Roasts (beef-pork-lamb) Steaks or chops (beef-lamb-pork)	1 month	2 months 8-12 months 4 months	12 months
Milk, fresh liquids, cheese, ice cream or sorbet	1 month	1-3 months	5 months (not recommended for ice cream)
Poultry (chicken-turkey)	1 month	5-7 months	9 months

UNFROZEN COMPARTMENT

Product	Storage period 0-3°C	Storage period (3-6°C)	Storage period 6-8°C
Cans, drinks, eggs, sauces, pickles, butter, jam	3-4 weeks	3-4 weeks	3-4 weeks
Tropical fruit	Not recommended	2-4 weeks	3-4 weeks
cheese, milk, dairy food, deli food, yoghurt	2-5 days	2-5 days	2-5 days
Cold cuts, desserts, meat and fish and home-cooked food	3-5 days	1-2 days	Not recommended
Store vegetables and fruits (excluding tropical fruits and citrus)	15 days	10-12 days	4-7 days

Functional sounds

1. A buzz generated by the compressor is normal while the product is working.

2. Gurgling and crackles are generated by the passage of the refrigerant gas inside the cooling circuit, therefore these are normal noises.

3. It's possible to "hear" creaks when the compressor is active and inactive: it is a normal sound of the product's structure.

4. Check that the balconies on the inside of the refrigerator door, the shelves and the drawers in the refrigerator compartment are attached and positioned properly, to avoid possible vibrations.
5. Don't place glass containers (bottles, jars, etc.) in direct contact with each other, to avoid vibrations.
6. This device is equipped with a compressor that operates at an optimum speed to minimise energy consumption. It may happen that in certain situations (in summer or if large quantities of food are stored) the compressor increases the speed and therefore it is more noisy than usual.

Recommendation in case of no use of the appliance

In the event of non-use of the appliance
Disconnect the appliance from the power supply, empty it, defrost it (if necessary) and clean it.
Keep the doors slightly ajar to let air circulate inside the compartments. By doing this, you avoid the development of mould and bad odours.
In the event of an interruption to the power supply
Keep the doors closed so the food stays cold for as long as possible. Do not re-freeze food that has partially defrosted. If there is a prolonged power cut, the black out alarm may also activate (in products with electronics).

Cleaning and maintenance

Before any cleaning or maintenance operation, unplug the appliance from the mains or disconnect the electrical power supply.
Never use abrasives. Never clean refrigerator parts with flammable fluids.
Do not use steam cleaners.
The buttons and control panel display must not be cleaned with alcohol or alcohol-derived substances, but with a dry cloth.

Clean the appliance occasionally with a cloth and a solution of warm water and neutral cleaning agents specifically made for cleaning the inside of the refrigerator.

Accessories *

EGG TRAY

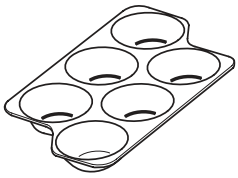

BOTTLE RACK

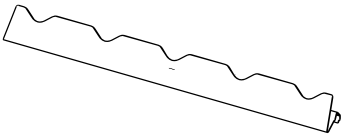

BOTTLE RACK

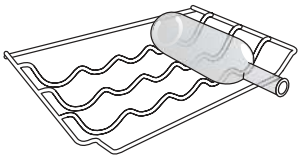

REFRIGERATOR PAD

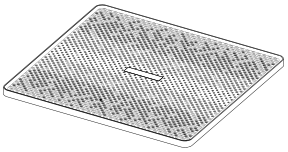

FREEZER PAD

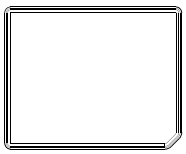

ICE TRAY

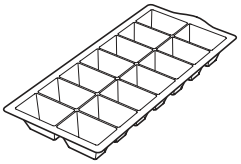

KNOB HUMIDITY CONTROL

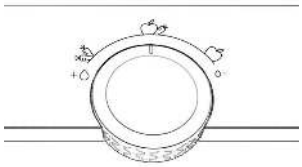

HUMIDITY CONTROL

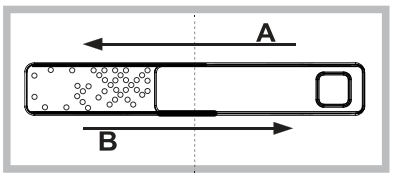

TUCK SHELF

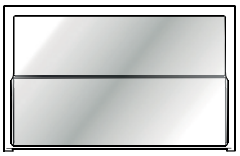

Humidity control *

Open the humidity regulator (position B) if you want to store food, like fruit, in a less humid environment or close it (position A) to store food, like vegetables, in a more humid environment

Tuck shelf *

Thanks to the rail system, this shelf allows you to slide it under the front part, creating an extra space for storing tall bottles or pitchers.

Freezer pad (Alu PAD)*

The metallic panel helps to freeze the food faster.
For easy cleaning the metallic panel can be removed, lifting it up from the left corner.

Refrigerator pad*

The fruit & vegetable drawer is equipped with the hygiene grid.
Thanks to the special design of this component fruit & vegetables do not come in contact with natural leakages (like drips and moisture loss from vegetables) that will drop underneath the hygiene grid. The hygiene grid is treated with Microban SilverShield® technology that reduces harmful bacteria by up to 99.9% on the surface of the crisper grid, for enhanced preservation of fruit and vegetables**. The hygiene grid can be removed to be washed when dirty, simply by raising it and pulling it out. It can be simply washed by hand, with water only or with common neutral detergents for dishes. It can also be washed in the dishwasher.
After cleaning, dry it before putting it back into place.

Gasket replacement

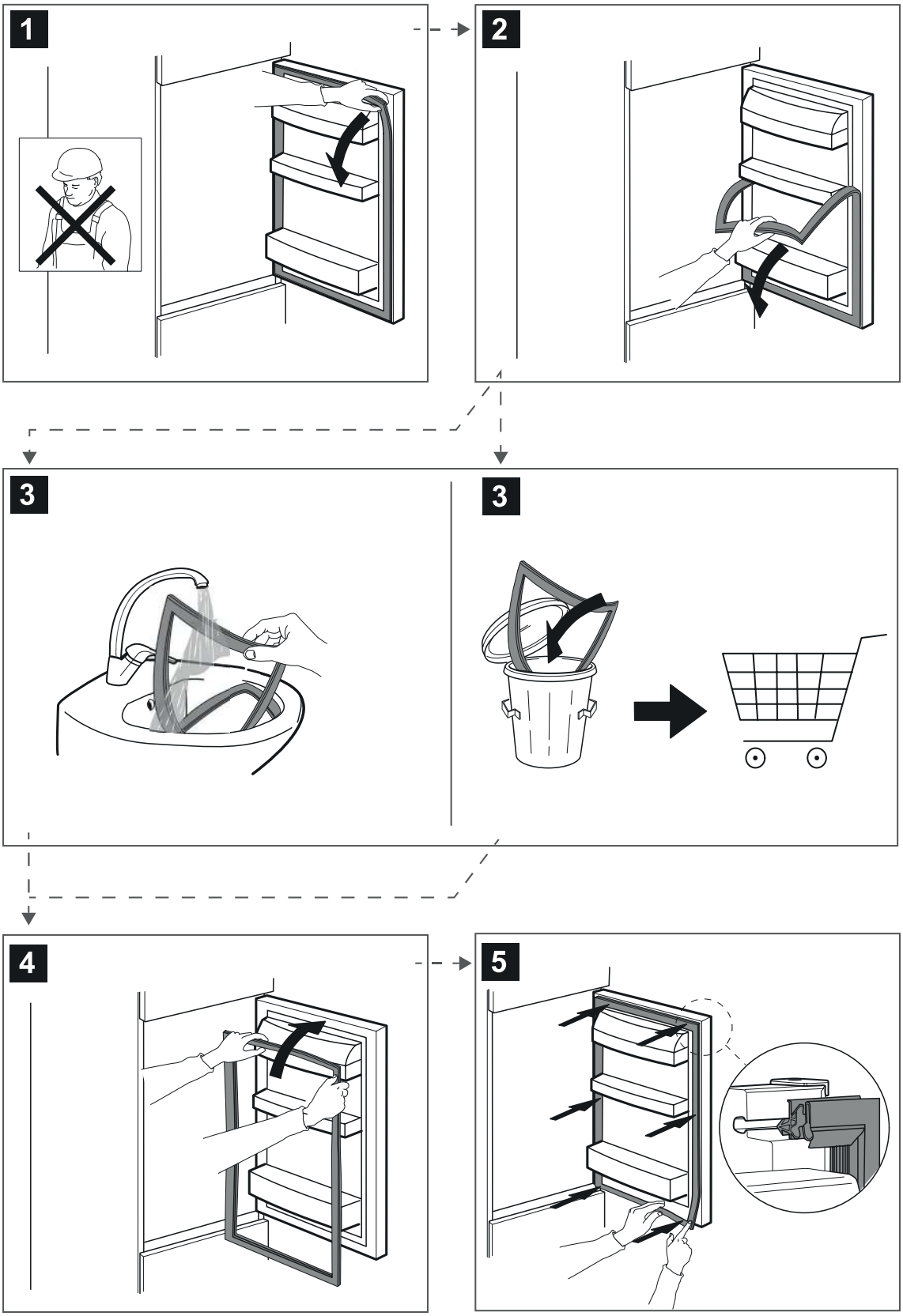

400011549176