Dear Customer,
Thank you for purchasing this 50's Style variable temperature kettle.
By choosing one of our products, you have selected an appliance which combines iconic style with innovative technical design and attention to detail.
This appliance co-ordinates perfectly with other Smeg products, or works equally great as a standalone statement piece in your kitchen.
We hope you enjoy using your new appliance!
For any further information please visit: www.smeg50style.com or www.smeg.com.

Model KLF04
Variable temperature kettle

Contents

1	**Instructions**	**22**
1.1	Introduction	22
1.2	This user manual	22
1.3	Intended use	22
1.4	General safety instructions	23
1.5	Manufacturer liability	25
1.6	Identification plate	25
1.7	Disposal	25
2	**Description**	**26**
2.1	Product description	26
2.2	Description of parts	27
3	**Use**	**29**
3.1	Before first use	29
3.2	Operation	30
3.3	Keep Warm function	32
3.4	Mute Function	32
3.5	Suggestions for setting the water temperature	33
4	**Cleaning and maintenance**	**34**
4.1	Instructions	34
4.2	Cleaning the surfaces	34
4.3	Ordinary daily cleaning	34
4.4	Cleaning the filter	35
4.5	Descaling	36
4.6	What to do if...	37

EN

We advise you to read this manual carefully, as it contains all the instructions for maintaining the appliance's aesthetic and functional qualities.
For further information on the product: www.smeg.com

1 Instructions

1.1 Introduction

Key information for the user:

Instructions

General information on this user manual, on safety and final disposal.

Description

Appliance description.

Use

Information on using your appliance.

Cleaning and maintenance

Information for proper cleaning and maintenance of the appliance.

Safety instructions

Information

Advice

1.2 This user manual

This user manual is an integral part of the appliance and must therefore be kept in its entirety and within the user's reach for the whole working life of the appliance.

1.3 Intended use

- Use the appliance only indoors.
- The appliance has been designed specifically for domestic use. It must only be used to heat water. Do not use the appliance for anything other than its intended use.
- The appliance is not designed to operate with external timers or with remote-control systems.
- This appliance may not be used by people of reduced physical, sensory or mental capacity, or without sufficient experience and knowledge (including children), unless they are supervised or instructed by adults who are responsible for their safety.
- Children must never play with the appliance. Keep the appliance out of children's reach.

EN

1.4 General safety instructions

Follow all safety instructions in order to use the appliance safely.

- Read this user manual carefully before using the appliance.
- This appliance can be operated both at 50 Hz and at 60Hz without any adjustment.
- Do not immerse the appliance, the power cord, the plug or the base in water or any other liquid.
- Never wash the appliance in the dishwasher.
- Do not use the appliance when the power cord or the plug is damaged or when the appliance has been dropped or is damaged in any manner.
- Do not position the power cord on sharp edges or leave it trailing.
- Protect the power cord from heat and oil.
- Do not position the appliance above hot surfaces, hob burners, or inside a hot oven.
- Do not position the appliance on surfaces sensitive to water. Drips could damage it.
- Do not unplug the appliance with wet hands, or by pulling on the power cord.
- In the event of a fault with the appliance, repairs must be performed only by qualified technicians or an authorised technical support service.
- Never try to put out a fire or flames with water: turn off the appliance and remove the plug from the socket, and smother the flames with a fire blanket or other appropriate cover.
- Do not modify this appliance.
- Do not try to repair the appliance yourself or without the assistance of a qualified technician.
- If the power supply cable is damaged, contact technical support immediately.
- Appliances can be used by persons with reduced physical, sensory or mental capabilities or lack of experience and knowledge if they have been given supervision or instruction concerning use of the appliance in a safe way and understand the hazards involved.
- Avoid spillage on the connector and power base.
- Warning: potential injury may cause from misuse.
- Regarding the instructions for cleaning, please refer to the chapter “Cleaning and maintenance”.

For this appliance

- The kettle can get very hot during operation. Do not touch the hot surfaces. Use the handle.
- Do not use the kettle if the handle is loose.
- Do not operate the kettle on an inclined plane.
- Do not leave the kettle unsupervised while it is on.
- Do not operate the kettle unless the element is fully immersed.
- Do not move the kettle while it is switched on.
- Unplug the kettle when it is not being used, before cleaning and if you notice any fault. Let the appliance cool down before cleaning.
- Always use the kettle with the scale filter fitted.
- Do not overfill the kettle (max. 1.7 litres), otherwise boiling water may spray out. If the kettle is overfilled, boiling water may be ejected.
- The heating element surface is subject to residual heat after use.
- Only use the kettle to boil water. Never fill the kettle with other liquids.
- Do not open the kettle's lid while it is on.
- Check that the lid is correctly closed before turning on the kettle.
- Use the kettle only with the supplied base.
- Do not use the kettle on bases from other manufacturers.
- Only place the base on level surfaces.
- Only use original spare parts. The use of spare parts not approved by the manufacturer could lead to fires, electric shocks or personal injury.
- To prevent damage to the appliance do not use alkaline cleaning agents when cleaning, use a soft cloth and a mild detergent.
- Do not use metal implements or scouring pads to clean the inside of the kettle. Only use products specifically designed for the purpose.
- Empty the kettle before you use it each time: if residual water is left inside, this could lead to scale building up.
- This appliance can be used by children aged from 8 years and above if they have been given supervision or instruction concerning use of the appliance in a safe way and if they understand the hazards involved.
- Cleaning and maintenance must never be performed by children unless they are older than 8 and supervised.
- Keep the kettle and its power cord out of the reach of children aged less than 8 years.
- Do not allow children to play with the appliance.
- This appliance is intended for use in a home environment. Every other use is considered improper. It also can be used in:
  - Staff kitchen areas in shops, offices and other working environments
  - Farm houses
  - by guests in hotels, motels and other residential type environments
  - Bed and breakfast type environments.

1.5 Manufacturer liability

The manufacturer shall not be liable for damage to persons or property caused by:

- Use of the appliance other than as envisaged
- Not having read the user manual
- Tampering with any part of the appliance
- Use of non-original spare parts
- Failure to observe the safety instructions.

1.6 Identification plate

The identification plate bears the technical data, serial number and brand name of the appliance. Do not remove the identification plate for any reason.

1.7 Disposal

This appliance must be disposed of separately from other waste (Directive 2012/19/EU). The appliance does not contain substances in quantities sufficient to be considered hazardous to health and the environment, in accordance with current European directives.

Electrical voltage
Danger of electrocution

- Disconnect the main power supply.
- Disconnect the power cable from the electrical system.

- **Old appliances do not belong in household waste!** To comply with current legislation, old appliances, on reaching the end of their useful lives, should be taken to a disposal facility where they can be sorted. In this way, any valuable material contained in the old appliances can be recycled, helping to protect the environment. The relevant local authorities or their waste disposal operators can provide further information.

Our appliances are packed in non-polluting and recyclable materials.

- Take these packing materials to the appropriate recycling centre.

Plastic packaging
Danger of suffocation

- Do not leave the packaging or any part of it unattended.
- Do not let children play with the plastic bags.

2 Description

2.1 Product description

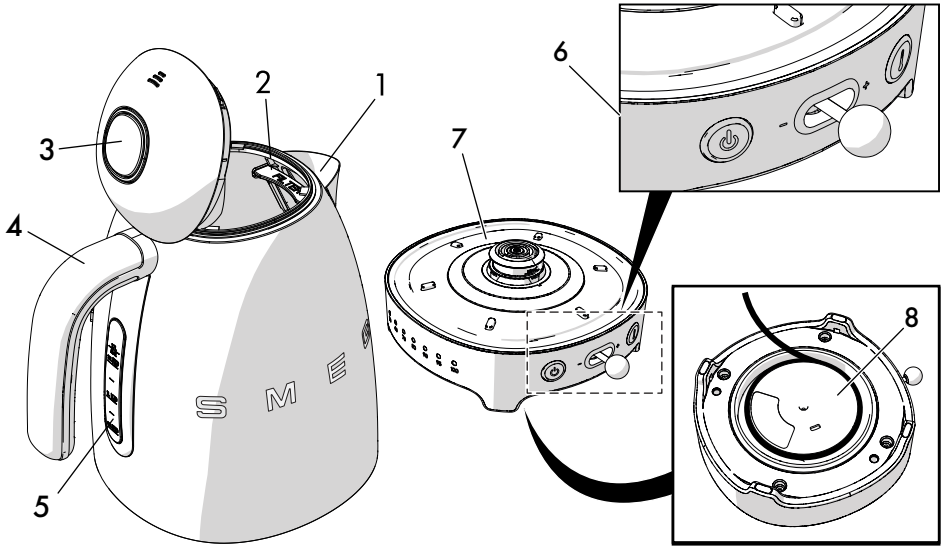

Model KLF04 - Variable temperature kettle

1 Anti-drip spout

2 Scale filter

3 Lid with soft opening

4 Handle

5 Water level indicator

6 Control panel

7 Base with 360° connection and temperature indicators

8 Cable compartment (under base)

2.2 Description of parts

Anti-drip spout (1)

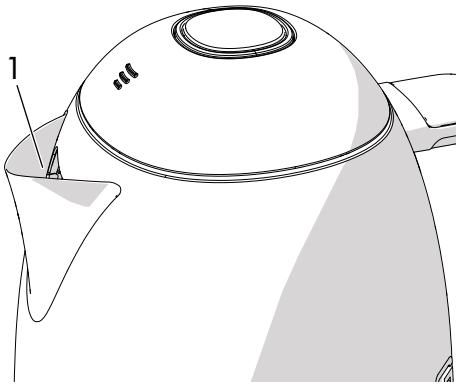

The large stainless-steel spout allows water to be poured easily and without spillage.

Lid with soft opening (3)

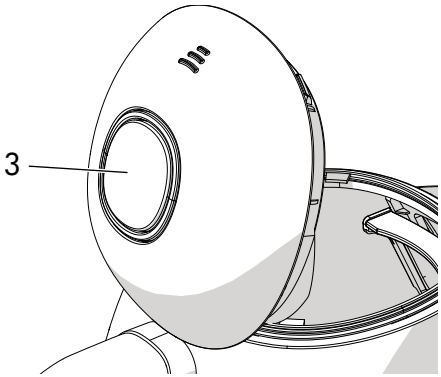

The lid has a soft opening button (**3**) which allows it to open progressively to prevent the sudden release of steam.

Scale filter (2)

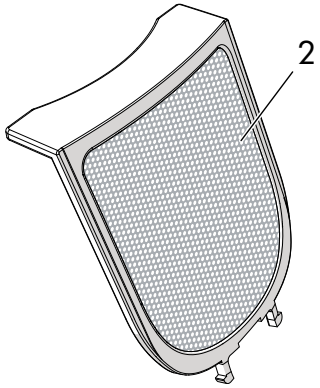

The stainless-steel filter is located behind the spout. It retains any scale present in the water.

Water level indicator (5)

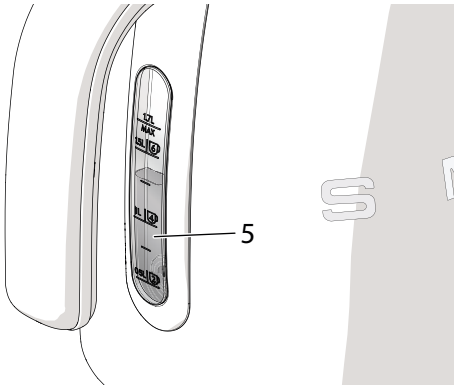

This indicator shows the level of water in the kettle, from the minimum fill level of 0.5 litres to the maximum of 1.7 litres, also showing the corresponding quantity in cups.

Control panel (6)

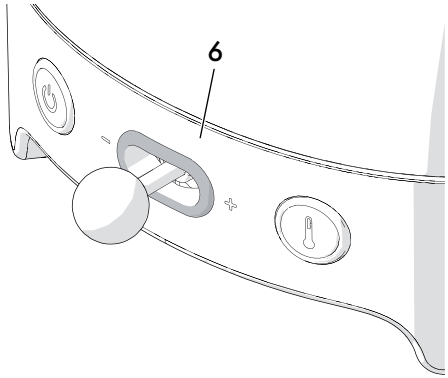

START/STOP key

Starts/stops the heating cycle. The LED lights up when the cycle is started.

– + Temperature selector

Allows you to select one of 7 temperature levels. The temperature indicator LEDs turn on when the boiling cycle is started.

Keep Warm function key

Allows you to keep the water at the selected temperature for 20 minutes. When activated, the LED of the Keep Warm function key lights up.

Base with 360° connection and temperature indicators (7)

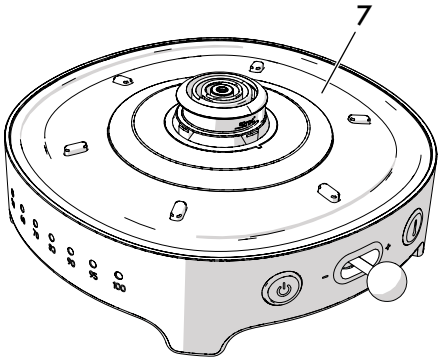

The base's 360° operation allows the kettle to be used in any position.

To avoid damaging the kettle, it is equipped with a **safety device** which turns the heating element off automatically if the heating cycle is accidentally activated without any water.

If this occurs, let the kettle cool down before starting the heating cycle again.

3 Use

Danger of electrocution

- Plug into a earthed 3-prong outlet.
- Do not remove the earth prong.
- Do not use an adapter.
- Do not use an extension cord.
- Failure to follow these instructions could result in death, fire, or electrical shock.

This appliance can be operated both at 50 Hz and at 60Hz without any adjustment.

3.1 Before first use

1. Remove all stickers and labels from the kettle and clean the outside with a damp cloth.
2. Remove the scale filter behind the spout and wash it under running water.
3. Replace the filter in the correct position.
4. Remove the kettle from its base, press the button to open the lid and fill it to the maximum level.
5. Close the lid and place the kettle back on its base. Check that the pre-set temperature is 100°C (if this not the case, see point 7 of section"3.2 Operation"), then press the START/ STOP key to start the boiling cycle.
6. Wait for the water to boil, then empty the kettle, disposing of the boiling water safely. Repeat this operation at least three times.

Hot surfaces

- Surfaces are liable to get hot.

Tips and suggestions for the user

- Do not use the kettle to heat anything other than water – this would risk causing severe damage to the appliance.
- Only boil the quantity of water required so as not to waste water, electricity and your time.
- Always boil cold water to improve the quality of your hot drinks.

To increase the appliance's lifetime:

- Empty any remaining water from the kettle after each use.
- Regularly remove any scale from inside the kettle.

Any slight marks or rings inside the kettle are normal and due to functional inspections which are performed on each unit before packaging.

3.2 Operation

1. If necessary, shorten the length of the power cable by winding it under the base.

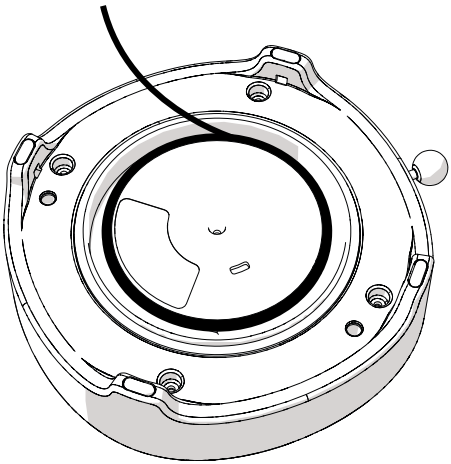

2. Hold the kettle by its handle when removing it from the base.

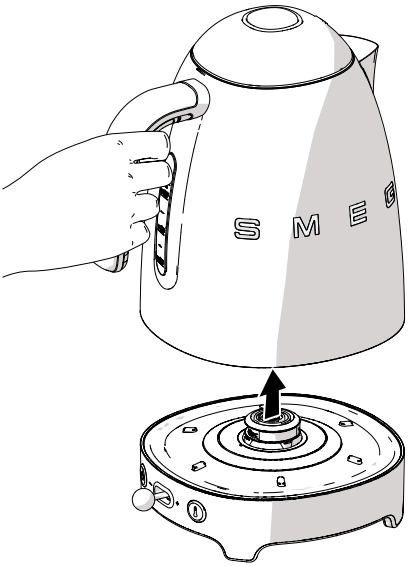

3. Press the button (**1**) to open the lid.

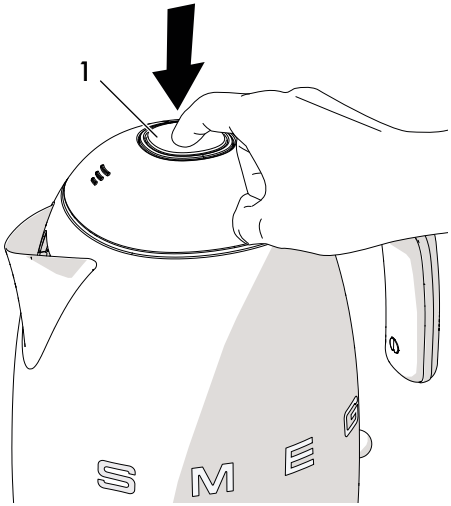

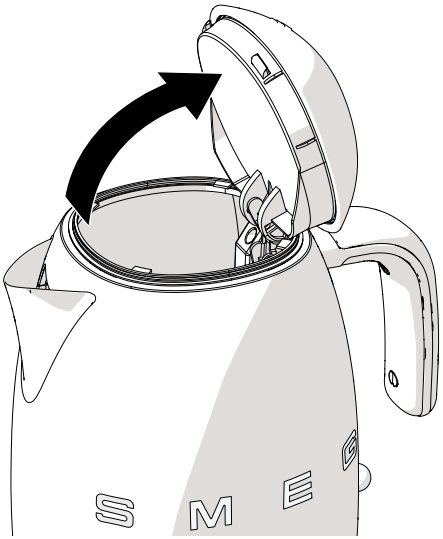

4. Fill the kettle with the required quantity of water, referring to the marks on the level indicator (**2**).

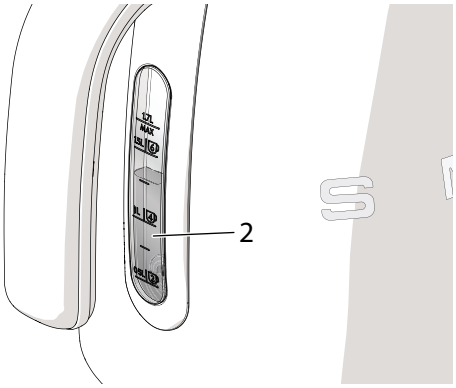

5. Close the lid again and place the kettle back on its base.

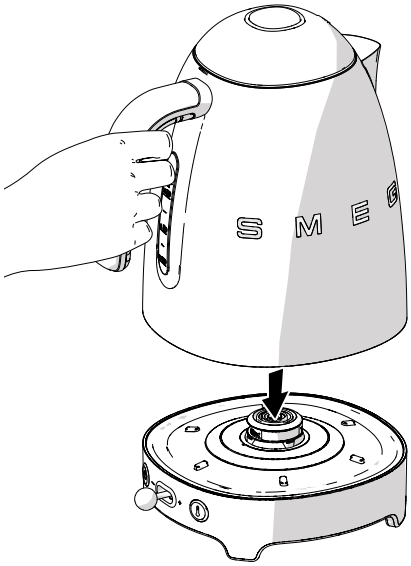

6. Insert the plug into the power socket. All LEDs come on and a beep sounds to indicate that the appliance has been turned on. The LEDs of START/STOP and Keep Warm keys switch off after 2 seconds and the default temperature set is 100°C.
7. Use the temperature selector (**3**) to select the required temperature. Move the temperature selector to the left to decrease the temperature. Move the temperature selector to the right to raise the temperature.

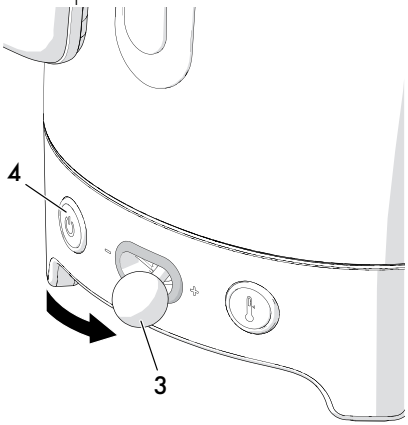

8. Press the START/STOP key (**4**): the LED will come on and a beep will sound to indicate that the cycle has started. The LED of the selected temperature will turn on, while those for the temperatures below that set will flash and then turn on progressively as the water reaches the corresponding temperature.
9. When the water reaches the set temperature, the corresponding LED and those of the temperatures below it will all be lit.
   The LED of the START/STOP key turns off and the appliance beeps to indicate the end of the cycle.

10. Pick up the kettle by the handle and pour the hot water into the desired recipient (cups, teapot etc.).
11. If no command is given within 60 seconds, the kettle will enter Stand-by mode (all LEDs off). Pressing any key will reactivate the kettle, placing it in Temperature SELECTION mode starting from the last temperature set. Now follow the operations from point 7 onwards in section "3 Use".

Danger of burns

- Wait a few seconds from when the kettle boils, then pour the water out slowly to prevent it spraying or coming out too fast.
- Do not fill the kettle beyond the maximum level (1.7 litres) – risk of burns when pouring.
- Do not tilt the hot kettle excessively – the boiling water could spray out, with a risk of burns.
- Keep your face at a safe distance from the lid to avoid the risk of burns from escaping steam.

3.3 Keep Warm function

This function allows you to keep the water in the kettle at the selected temperature for a maximum of 20 minutes.

This function can be activated at any moment during the heating cycle by pressing the Keep Warm key (the corresponding LED turns on to confirm the selection). Pressing the key again exits then Keep Warm function and the LED will turn off. After 20 minutes have passed, the kettle enters Stand-by mode.

3.4 Mute Function

This function allows you to deactivate the kettle ON/OFF, START/STOP, and end of cycle sounds.

The function can be activated by pressing the Keep Warm key for 5 seconds (the corresponding LED lights up and flashes while the operation is stored).

Pressing the Keep Warm key again for 5 seconds (the corresponding LED will light up and flash) exits the Mute function, reactivating the sounds.

3.5 Suggestions for setting the water temperature

Drink	Recommended temperature
Delicate teas	50° - 60°C
Green tea	70° - 80°C
White tea	70° - 80°C
Oolong tea	90° - 95°C
Black tea	90° - 100°C
Herbal teas	90° - 100°C
Instant coffee, Instant cappuccino, Instant drinking chocolate	90° - 100°C

4 Cleaning and maintenance

4.1 Instructions

Improper use
Danger of electrocution

- Unplug the kettle before cleaning it.

Hot appliance
Danger of burns

- Let the appliance cool down before cleaning.

Improper use
Risk of damage to surfaces

- Do not use steam jets to clean the appliance.
- Do not use cleaning products containing chlorine, ammonia or bleach.
- Do not use abrasive or corrosive detergents (e.g. powder products, stain removers and metallic scourers).
- Do not use rough or abrasive materials or sharp metal scrapers.

4.2 Cleaning the surfaces

To keep the kettle's outside surfaces in good condition, they should be cleaned regularly after use. Let them cool first.

4.3 Ordinary daily cleaning

Always use only products which do not contain abrasive substances or chlorine-based acids.

Pour the product onto a damp cloth and wipe the surface, wipe clean thoroughly and then dry with a soft cloth or a microfibre cloth.

For cleaning the filter, see the section "4.4 Cleaning the filter".

Tips and suggestions for the user

Clean the outside surfaces of the kettle and perform the cleaning operations indicated in section "3.1 Before first use" from point 2 to point 6 if the kettle is left unused for a long time.

4.4 Cleaning the filter

Important

When washing the filter, make sure your hands are clean and free of any residue from soap, creams or other products which could contaminate the water.

1. Open the lid and extract the filter.

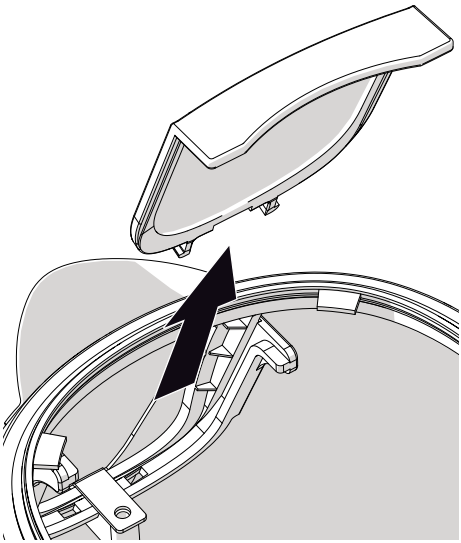

2. Wash the filter under running water with the aid of a soft brush.

3. Put the filter back in position behind the spout.

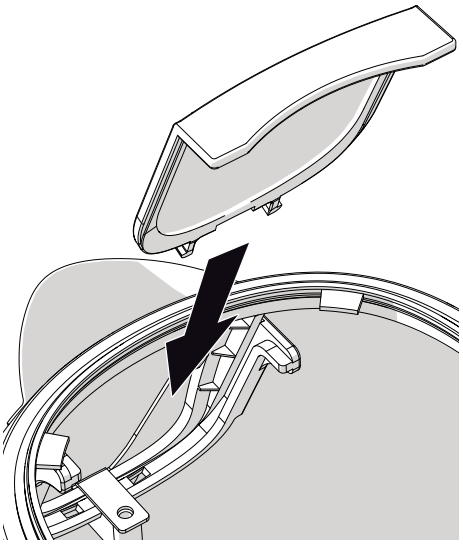

4.5 Descaling

Regularly removing any deposits of scale inside the kettle will prolong your kettle's life, ensuring maximum performance and energy savings.

The kettle can be descaled using specific descaling products.

Improper use
Risk of damage to the appliance

- Do not use descaling products for cleaning bathrooms or kitchens, or scented products.

Leave the descaling product to act, then rinse thoroughly. Then boil at least two full kettles of water, disposing of the boiling water safely, to remove any residue of the product before use.

Alternatively, you can use common household vinegar.

Proceed as follows:

1. Fill the kettle with water (1 litre) and boil it.
2. Add the white vinegar (from 0.1 to 0.5 l depending on the amount of scale).
3. Leave it to act overnight.
4. Empty the kettle.
5. Fill the kettle with water and boil it. Empty the kettle, disposing of the water safely. Repeat this operation at least twice.

Tips and suggestions for the user

- Scale build-up can cause the kettle to switch off during use before the water has boiled. Boiling times could also be increased.
- If the kettle is used daily, or if it becomes more difficult to pour out the water, descale the kettle and filter more frequently.
- In some regions the water is harder, and in these areas it could have a cloudy appearance and leave residue on the walls of the kettle. In this case, clean the inside of the kettle more frequently or use purified/softened water.

4.6 What to do if...

Problem	Cause	Solution
Pouring water becomes more difficult	Scale build-up on filter	Check that the filter is clean and correctly positioned
The kettle turns off before boiling	The base of the kettle has excessive scale build-up	Descale more frequently
	Too little water has been added to the kettle or there is no water inside the kettle.	Increase the quantity of water until you reach at least the minimum level
The appliance does not turn on	The safety device has tripped out due to the kettle being operated without water	Let the kettle cool down before attempting to boil water again
	The plug is not properly inserted in the power socket	Insert the plug into the power socket. Do not use adaptors or extensions. Check that the house's main breaker is on
	The cable is defective	Have the cable replaced at an Authorised Service Centre
	Lack of power	Check that the house's main breaker is on