HP ScanJet Pro 2600 f1, 3600 f1, N4600 fnw1
HP ScanJet Enterprise Flow N6600 fnw1

User Guide

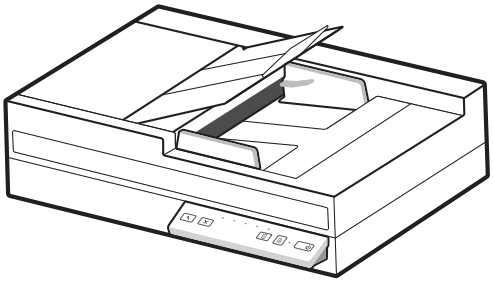

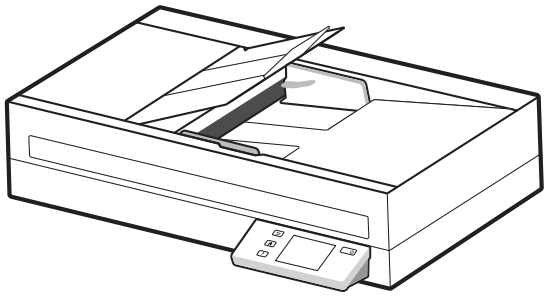

www.hp.com/support/sjpro2600f1
www.hp.com/support/sjpro3600f1
www.hp.com/support/sjproN4600fnw1
www.hp.com/support/sjflowN6600fnw1

HP ScanJet Pro 2600 f1, 3600 f1, N4600 fnw 1 HP ScanJet Enterprise Flow N6600 fnw1 User Guide

SUMMARY

This guide provides configuration, use, maintenance, troubleshooting, safety and environmental information.

Legal information

Copyright and License

© Copyright 2022 HP Development Company, L.P.

Reproduction, adaptation, or translation without prior written permission is prohibited, except as allowed under the copyright laws.

The information contained herein is subject to change without notice.

The only warranties for HP products and services are set forth in the express warranty statements accompanying such products and services. Nothing herein should be construed as constituting an additional warranty. HP shall not be liable for technical or editorial errors or omissions contained herein.

Edition 1, 3/2022

Trademark Credits

Adobe®, Adobe Photoshop®, Acrobat®, and PostScript® are trademarks of Adobe Systems Incorporated.

Apple and the Apple logo are trademarks of Apple Inc., registered in the U.S. and other countries.

macOS is a trademark of Apple Inc., registered in the U.S. and other countries.

AirScan is a trademark of Apple Inc., registered in the U.S. and other countries.

Google™ and Gmail™ are trademarks of Google Inc.

Microsoft®, Windows®, Windows® XP, SharePoint®, and Internet Explorer® are U.S. registered trademarks of Microsoft Corporation.

UNIX® is a registered trademark of The Open Group.

Yahoo!® is a registered trademark of OATH Inc.

Table of contents

1 Product overview 1

Product views 1

Front view (2600 f1 and 3600 f1 models) 1

Front view (N4600 fnw1 and N6600 fnw1 models) 2

Back view (2600 f1 models) 3

Back view (3600 f1 models) 3

Back view (N4600 fnw1 and N6600 fnw1 models) 4

Serial number and product number location 4

Control panel view (2600 f1 and 3600 f1 models) 5

Touch panel view (N4600 fnw1 and N6600 fnw1 models) 5

Product specifications 7

Technical specifications 7

Supported operating systems 8

Product dimensions 9

Electrical specification 9

Operating environmental range 9

Product hardware setup and software installation 10

Scanner software (Windows) 10

HP Scan software 10

HP TWAIN 11

ISIS 11

WIA 11

Scanner software (macOS) 11

HP Easy Scan 11

HP Utility 12

Embedded Web Server 12

HP Web Jetadmin 12

Sleep Mode and auto-off settings 12

Change the default sleep and auto-off settings using the HP Scanner Tools Utility 12

Change the default auto-off setting using the HP Utility 12

2 Use the scanner 14

Set up the scanner (N4600 fnw1 and N6600 fnw1 models) 14

Set up Scan to Email 14

Set up Scan to Network Folder 17

Set up Scan to USB Drive 19

Set up Scan to SharePoint 21

Set up access control 23

Load originals 24

Document loading tips 24

Supported paper sizes and types 25

Load documents in the input tray ... 26
Load documents on the scanner glass ... 28
Start a scan from the hardware ... 28
Scan from the control panel buttons (2600 f1 and 3600 f1 models) ... 29
Scan from the touch screen (N4600 fnw1 and N6600 fnw1 models) ... 29
Use the scanning software (Windows) ... 31
Work with scan shortcuts ... 31
Scan to a picture ... 31
Scan to a PDF ... 32
Scan text for editing (OCR) ... 32
Scan to email ... 32
Scan to cloud ... 32
Scan to FTP ... 32
Scan to SharePoint ... 33
Scan long or extra-long documents ... 33
Detect multi-feeds ... 33
Everyday Scan ... 33
Automatically delete blank pages ... 34
Automatically adjust page orientation ... 34
Reserved Jobs (N4600 fnw1 and N6600 fnw1 models) ... 34
Filter out color from a document (color dropout) ... 35
Automatically detect page size ... 35
Automatically crop or pad scanned image to selected page size ... 35
Automatically detect color ... 35
Scan using text-enhanced black and white mode ... 36
Automatically straighten scanned images ... 36
Add or remove a device ... 36
Scan by using other scan software ... 37
Use the scanning software (macOS) ... 37
Scan to email ... 37
HP Easy Scan ... 37
Scan from other applications ... 38
Advanced configuration with HP Utility (macOS) ... 38
Open HP Utility ... 38
HP Utility features ... 38
Scanning tips ... 38
Optimize scanning and task speeds ... 38
3 Care and maintenance ... 40
Test and calibrate the touch screen (N4600 fnw1 and N6600 fnw1 models) ... 40
Clean the product ... 40
Clean the scanner glass ... 40
Clean the scanning strips ... 41
Replace parts ... 42
Replace the separation pad or rollers ... 42
Replace the pickup roller module ... 45

Order parts and accessories 45

4 Solve problems 47

Basic troubleshooting tips 47

Reset the scanner(N4600 fnw1 and N6600 fnw1 models) 48

Interpret control panel lights and patterns (2600 f1 and 3600 f1 models) 48

Scanner installation problems 49
- Check the cables 49
- Uninstall and then reinstall the HP ScanJet drivers and tools (Windows) 49

Power issues 50
- Check that the scanner has power 50
- The scanner will not turn on 50
- The scanner has paused or shut down 51
- The scanner keeps turning off 52

Paper jams 52
- Clear jams from the document feeder 52
- An item loaded in the scanner jams repeatedly 53

Paper feed issues 53
- Paper jamming, skewing, misfeeds, or multiple-page feeds 53
- Paper does not feed from the scanner 53

Image quality problems 54
- The scanned images are not straight 54
- The scanned images have streaks or scratches 54
- The scanned image is fuzzy 54
- The scanned image is completely black or completely white 54
- The bottom of the scanned image is cut off 55
- The scanned image cannot be enlarged 55

Scanner operation problems 55
- Connection issues 55
- Buttons are not working properly 56
- LCD issues (N4600 fnw1 and N6600 fnw1 models) 57
- The touch panel display issues (N4600 fnw1 and N6600 fnw1 models) 57
- Scanning performance issues 57
- Issues with text recognition (OCR) (Windows) 59
- Email problems (N4600 fnw1 and N6600 fnw1 models) 59

5 Additional troubleshooting 61

Index 62

1 Product overview

Before getting started, check product features, specifications, software, and more.

The following information is correct at the time of publication. For current information, visit the support home page for the scanner:

- 2600 f1 models: www.hp.com/support/sjpro2600f1
- 3600 f1 models: www.hp.com/support/sjpro3600f1
- N4600 fnw1 models: www.hp.com/support/sjproN4600fnw1
- N6600 fnw1 models: www.hp.com/support/sjflowN6600fnw1

HP's all-inclusive help for this product includes the following:

- Install and configure
- Learn and use
- Solve problems
- Download software updates
- Join support forums
- Find warranty and regulatory information

Product views

Learn the physical components of the scanners.

Front view (2600 f1 and 3600 f1 models)

Identify the parts on the front of the scanner.

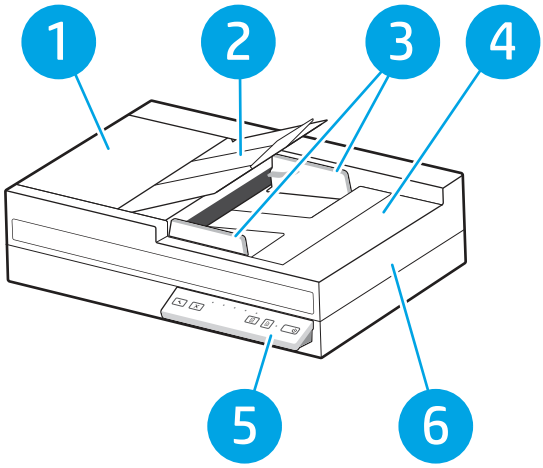

Table 1-1 Front view (2600 f1 and 3600 f1 models)

Callout	Description
1	Document feeder latch
2	Document output tray with extension
3	Paper guides
4	Document input tray
5	Control panel
6	Scanner lid

Front view (N4600 fnw1 and N6600 fnw1 models)

Identify the parts on the front of the scanner.

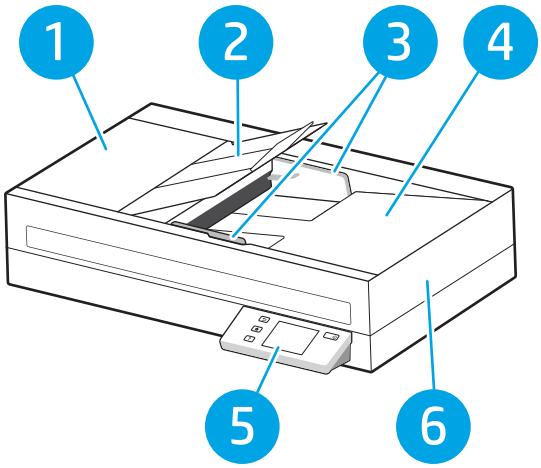

Table 1-2 Front view (N4600 fnw1 and N6600 fnw1 models)

Callout	Description
1	Document feeder latch
2	Document output tray with extension

Table 1-2 Front view (N4600 fnw1 and N6600 fnw1 models) (continued)

Callout	Description
3	Paper guides
4	Document input tray
5	Control panel
6	Scanner lid

Back view (2600 f1 models)

Identify the parts on the back of the scanner.

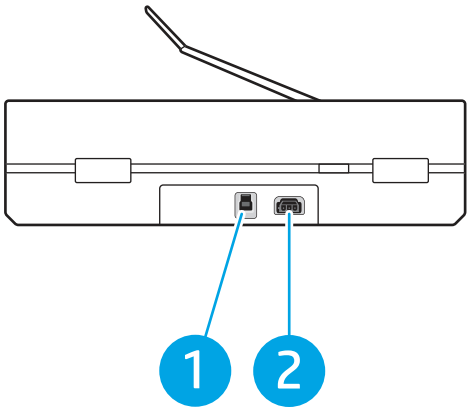

Table 1-3 Back view (2600 f1 models)

Callout	Description
1	USB 2.0 interface port
2	Power supply input

Back view (3600 f1 models)

Identify the parts on the back of the scanner.

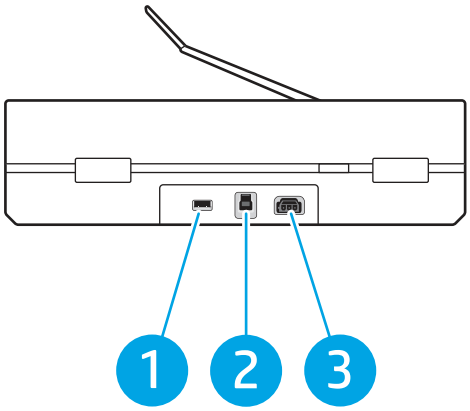

Table 1-4 Back view (3600 f1 models)

Callout	Description
1	USB host for USB flash drive
2	USB 3.0 interface port
3	Power supply input

Back view (N4600 fnw1 and N6600 fnw1 models)

Identify the parts on the back of the scanner.

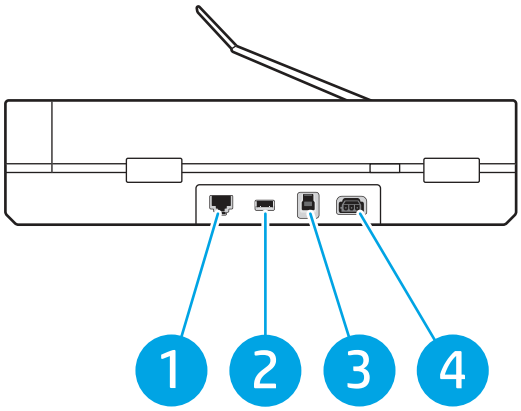

Table 1-5 Back view (N4600 fnw1 and N6600 fnw1 models)

Callout	Description
1	LAN port
2	USB host for USB flash drive
3	USB 3.0 interface port
4	Power supply input

Serial number and product number location

The serial and product numbers label is located on the bottom of the scanner.

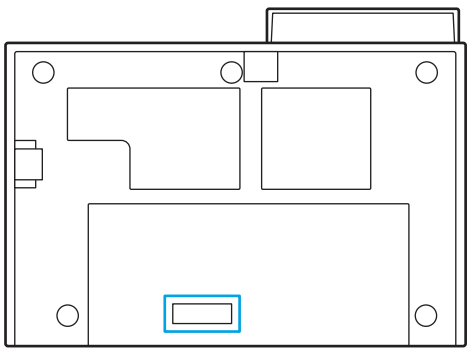

Control panel view (2600 f1 and 3600 f1 models)

Use the buttons on the control panel to start or cancel a scan, and to turn the unit on and off.

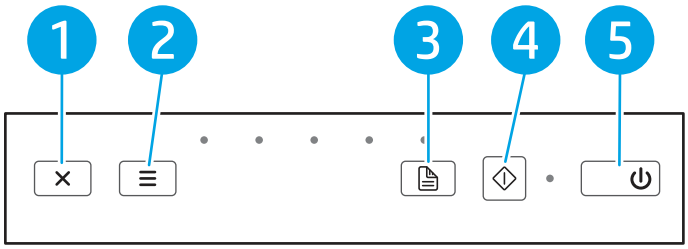

Table 1-6 Control panel view (2600 f1 and 3600 f1 models)

Callout	Icon	Name	Description
1		Cancel button	Press this button to cancel a scan in progress.
2		Shortcut Select button	Press this button to toggle through and select a scan shortcut option: • Scan to PDF • Scan to JPEG (picture) • Scan to Email • Scan to Cloud • Scan to USB (3600 f1 only) The selected shortcut will be indicated by the corresponding LED indicator. NOTE: The settings of the shortcuts can be configured in the HP Scan software.
3		Default/Duplex Toggle button	Press this button to toggle between default (simplex or duplex) and forced duplex scan.
4		Scan button	Press this button to initiate a scan.
5		Power button and LED	Press this button to turn on the scanner. Press and hold this button for three seconds to turn off the scanner.

Touch panel view (N4600 fnw1 and N6600 fnw1 models)

Identify the buttons on the control panel.

Touch screen menu structure

Identify the features on the touch panel.

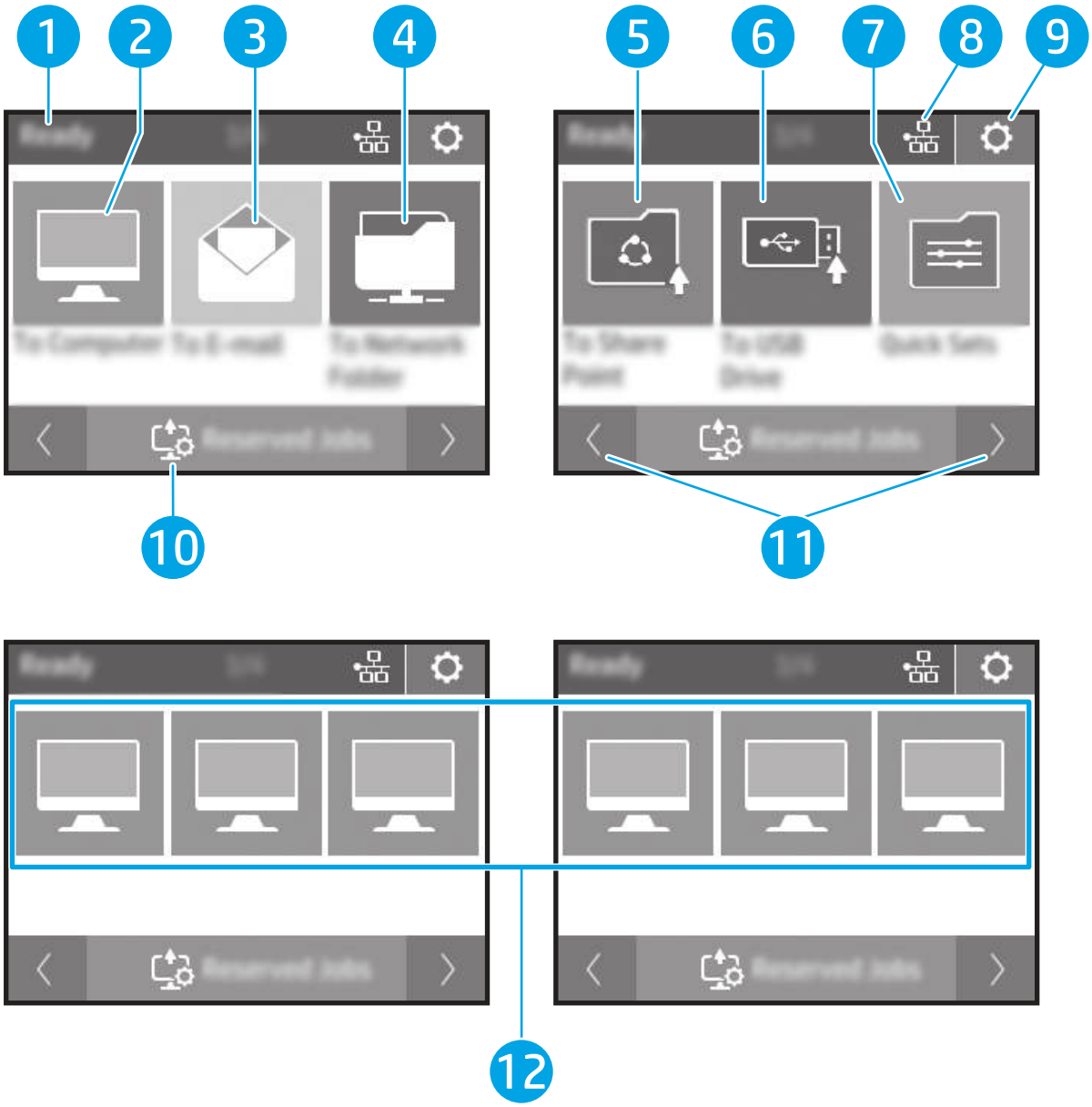

Table 1-7 Touch screen menu

Callout	Description
1	Ready
2	Starts a scan to a connected computer
3	Starts a scan to an email address
4	Starts a scan to a network folder
5	Starts a scan to SharePoint
6	Starts a scan to a USB flash drive
7	Select a scan Quick Set
8	Network connection status

Table 1-7 Touch screen menu (continued)

Callout	Description
9	Settings
10	Reserved jobs
11	Go to previous or next page
12	Favorite shortcuts

NOTE: The features that appear on the Home screen can vary, depending on the scanner configuration.

Buttons on the touch panel

Use the buttons on the touch panel to start or cancel a scan, and to power the unit on and off.

Table 1-8 Buttons on the touch panel

Callout	Icon	Name
1	ⓘ	Help
2	⌂	Home
3	↩	Back
4	⏻	Power/Sleep
5	Not available	Touch panel

Product specifications

This section introduces the product specifications.

Technical specifications

Review the technical specifications for the scanner.

Table 1-9 Technical specifications

Feature	Specification
Input tray capacity	**2600 f1 and 3600 f1 models:** 60 sheets of 80 g/m^2 (24 lb) **N4600 fnw1 and N6600 fnw1 models:** 100 sheets of 80 g/m^2 (24 lb)
Minimum paper size	148 x 89 mm (5.8 x 3.5 in)
Maximum paper size	**2600 f1 and 3600 f1 models:** 3100 x 216 mm (122 x 8.5 in) **N4600 fnw1 and N6600 fnw1 models:** 5362 x 216 mm (211 x 8.5 in)
Minimum paper weight	**2600 f1 models:** 60 g/m^2 (16 lb) **3600 f1 models:** 49 g/m^2 (13 lb) **N4600 fnw1 and N6600 fnw1 models:** 45 g/m^2 (12 lb)
Maximum paper weight	**2600 f1 models:** 105 g/m^2 (28 lb) **3600 f1, N4600 fnw1 and N6600 fnw1 models:** 120 g/m^2 (32 lb)
Minimum paper guiding space	89 mm (3.5 in)
Resolution	600 pixels per inch (ppi) for scanning
Environmental features	• By default, scanner enters Sleep Mode prior to 15 minutes of inactivity • ENERGY STAR® qualified
Paper-handling	• **Two-sided scanning:** Two-sided documents scan in a single pass • **HP EveryPage with Ultrasonic multi-feed sensor (Except 2600f1 model):** Detects when multiple pages feed through simultaneously

Supported operating systems

The following information applies to the scanner-specific Windows and HP scan drivers for macOS and to the software installer.

Windows: See the software installation notes for more information.

macOS: Mac computers are supported with this scanner. Download the software from the product support home page, and then use it to install the HP scan driver.

1. Go to the product support home page.
2. Follow the steps provided to download the scanner software.

Linux: For information and scan drivers for Linux, go to www.hp.com/go/linuxprinting.

NOTE: For a current list of supported operating systems, go to the product support home page for HP's all-inclusive help for the scanner:

- 2600 f1 models: www.hp.com/support/sjpro2600f1
- 3600 f1 models: www.hp.com/support/sjpro3600f1
- N4600 fnw1 models: www.hp.com/support/sjproN4600fnw1

- N6600 fnw1 models: www.hp.com/support/sjflowN6600fnw1

Table 1-10 Minimum system requirements

Windows 7, 8.1, 10, 11 Windows Server 2008 R2, 2012 R2, 2016, 2019	macOS 10.14 (Mojave) macOS 10.15 (Catalina) macOS 11.x (Big Sur)	Mobile devices, Android
• 32-bit or 64-bit • 2 GB of available hard disk space • Microsoft® Internet Explorer or any browser • Internet connection • USB port	• 2 GB of available hard disk space • Internet connection • USB port	Router connection not required

Product dimensions

Make sure your scanner environment is large enough to accommodate the scanner.

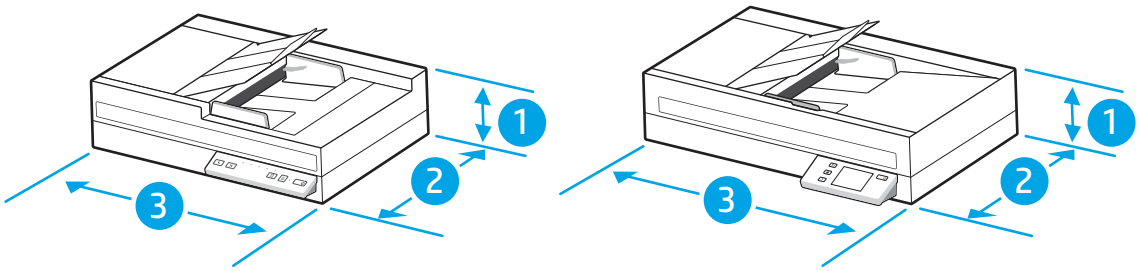

Table 1-11 Product dimensions

Model	1. Height	2. Depth	3. Width	Weight
2600 f1 and 3600 f1 models	133.3 (5.2 in)	325.4 mm (12.8 in)	491.5 mm (19.4 in)	5.4 kg (11.9 lb)
N4600 fnw1 and N6600 fnw1 models	133.3 (5.2 in)	325.4 mm (12.8 in)	536.5 mm (21.1 in)	6.1 kg (13.4 lb)

Electrical specification

In order to operate properly, the scanner must be in an environment that meets certain power specifications.

Specification of power supply: Power supply is rated 100–240V~, and has a DC output of 32 Vdc, 1.56 A, 50 W.

⚠ CAUTION: Power requirements are based on the country/region where the product is sold. Do not convert operating voltages. This will damage the product and void the product warranty.

Operating environmental range

Review the recommended operating-environment specifications for your scanner.

Table 1-12 Operating environmental range

Environment	Recommended	Allowed
Temperature	17.5° to 25°C (63.5° to 77°F)	10° to 35°C (50° to 95°F)
Relative humidity	30% to 70% relative humidity (RH)	15% to 80% RH non-condensing
Altitude	Not applicable	0 to 3048 m (0 to 10,000 ft)

Product hardware setup and software installation

For basic setup instructions, see the Installation Guide that came with the product. For additional instructions, go to HP support on the web.

Go to the product support home page for HP's all-inclusive help for the product:

- 2600 f1 models: www.hp.com/support/sjpro2600f1
- 3600 f1 models: www.hp.com/support/sjpro3600f1
- N4600 fnw1 models: www.hp.com/support/sjproN4600fnw1
- N6600 fnw1 models: www.hp.com/support/sjflowN6600fnw1

HP's all-inclusive help for the product includes the following:

- Install and configure
- Learn and use
- Solve problems
- Download software and firmware updates
- Join support forums
- Find warranty and regulatory information

Scanner software (Windows)

The scanner comes with a variety of Windows scanning software and drivers, including HP Scan.

HP Scan software

Use the HP Scan software to complete the following tasks:

- Scan to a PDF
- Scan to a JPEG
- Email as a PDF
- Email as a JPEG
- Scan text for editing (OCR)

- Scan to cloud
- Everyday scan

HP Scanner Tools Utility

Use the HP Scanner Tools Utility to complete the following tasks:

- Set maintenance and status update notification options
- Change the scanner's power management settings
- View scanner information (firmware version, serial number, total number of pages scanned)
- Modify properties of Scan to USB Drive

To open the utility, do one of the following:

- Windows 8.1 and 10: On the **Start** screen, click the **HP Scanner Tools Utility** tile.
- Launch **HP Scan Assistant** from your desktop, and then select **Tools**.

HP TWAIN

HP TWAIN provides a software interface between imaging/scanning hardware and TWAIN-compliant software applications. Not all TWAIN-compliant software works in the same way, so consult the software documentation for details on how to acquire scans.

ISIS

ISIS (Image and Scanner Interface Specification) provides a software interface between imaging/scanning hardware and ISIS-based software applications. ISIS drivers provide a consistent interaction with all ISIS-compliant scanners.

WIA

WIA provides a software interface between imaging/scanning hardware and WIA-compliant software applications. Not all WIA-compliant software works in the same way, so consult the software documentation for details on how to acquire scans.

Scanner software (macOS)

The product is compliant with Apple AirScan functionality. Without installing any additional software, you can scan using Image Capture or other ICA-compliant applications.

To take advantage of all features of your scanner, HP recommends installing the HP provided scan solution, including HP Easy Scan and HP Utility.

HP Easy Scan

Scan documents and photos, and manage scan shortcuts.

HP Utility

The **Maintenance** pane in HP Utility displays the scanner usage, maintenance history, and notifies the user when maintenance is due. The notification displays in HP Utility when the **Maintenance** pane is selected.

HP Utility allows you to configure the scanner and assign the Scan button workflow on a Mac. HP Utility is available in the **Applications > HP** folder.

Embedded Web Server

The product is equipped with an Embedded Web Server, which provides access to information about product and network activities. This information appears in a Web browser, such as Microsoft Internet Explorer, Microsoft Edge, Mozilla Firefox, or Google Chrome.

The Embedded Web Server resides on the product. It is not hosted on a network server.

The Embedded Web Server provides an interface to the product that anyone who has a network-connected computer and a standard Web browser can use. No special software is installed or configured, but you must have a supported Web browser on your computer. To gain access to the Embedded Web Server, type the IP address for the product in the address line of the browser. To find the IP address, touch the Network icon or in the top right corner of the home screen, and then touch Wireless or Wired (LAN).

HP Web Jetadmin

HP Web Jetadmin is an award-winning, industry-leading tool for efficiently managing a wide variety of networked HP products, including printers, multifunction printers, and digital senders. This single solution allows you to remotely install, monitor, maintain, troubleshoot, and secure your printing and imaging environment — ultimately increasing business productivity by helping you save time, control costs, and protect your investment.

HP Web Jetadmin upgrades are periodically made available to provide support for specific product features. Go to www.hp.com/go/webjetadmin for more information.

Sleep Mode and auto-off settings

By default, the scanner will enter Sleep Mode prior to 15 minutes of inactivity, and will turn off automatically after two hours of inactivity to conserve power.

Change the default sleep and auto-off settings using the HP Scanner Tools Utility

Windows: To change the default sleep and auto-off settings, use the HP Scanner Tools Utility.

1. Start the HP Scanner Tools Utility.
2. Click the **Settings** tab.
3. Select the desired values from the **Turn off the scanner after** drop-down list and the **Put the scanner to sleep after** drop-down list.

Change the default auto-off setting using the HP Utility

macOS: To change the default auto-off setting use the HP Utility **Energy** pane.

1. Start HP Utility.

2. Click the **Energy** icon.
3. Select an auto-off time setting from the **Automatically power off the scanner:** drop-down box.

2 Use the scanner

The following topics describe how to set up and use the scanner.

Set up the scanner (N4600 fnw1 and N6600 fnw1 models)

The following topics describe how to set up the scanner.

Set up Scan to Email

The following steps describe how to set up Scan to Email.

Step one: Check the network connection and gather SMTP information

To set up the Scan to Email feature, the product must have an active network connection to the same network as the computer that will run the setup process.

Gather the following information before beginning the configuration process:

- Administrative access to the product
- SMTP server (e.g., smtp.mycompany.com)

NOTE: If you do not know the SMTP server name, SMTP port number, or authentication information, contact the email/Internet service provider or system administrator for the information. SMTP server names and port names are typically found by doing an Internet search. For example, use terms like "Gmail smtp server name" or "Yahoo smtp server name" to search.

- SMTP server authentication requirements for outgoing email messages, including the user name and password used for authentication, if applicable.

NOTE: Consult your email service provider's documentation for information on digital sending limits for your email account. Some providers may temporarily lock your account if you exceed your sending limit.

Step two: Access the HP Embedded Web Server (EWS)

To access the HP Embedded Web Server (EWS), complete the following steps:

1. From the Home screen on the product control panel, touch the Network icon or according to your network connection method, and then touch Wireless or Wired (LAN) to display the IP address or host name.
2. Open a web browser, and in the address line, type the IP address or host name exactly as it displays on the product control panel. Press the Enter key on the computer keyboard. The EWS opens.

Figure 2-1 Example of an IP address in a web browser

NOTE: If the web browser displays a message indicating that accessing the website might not be safe, select the option to continue to the website. Accessing this website will not harm the computer.

Figure 2-2 Example of the EWS screen

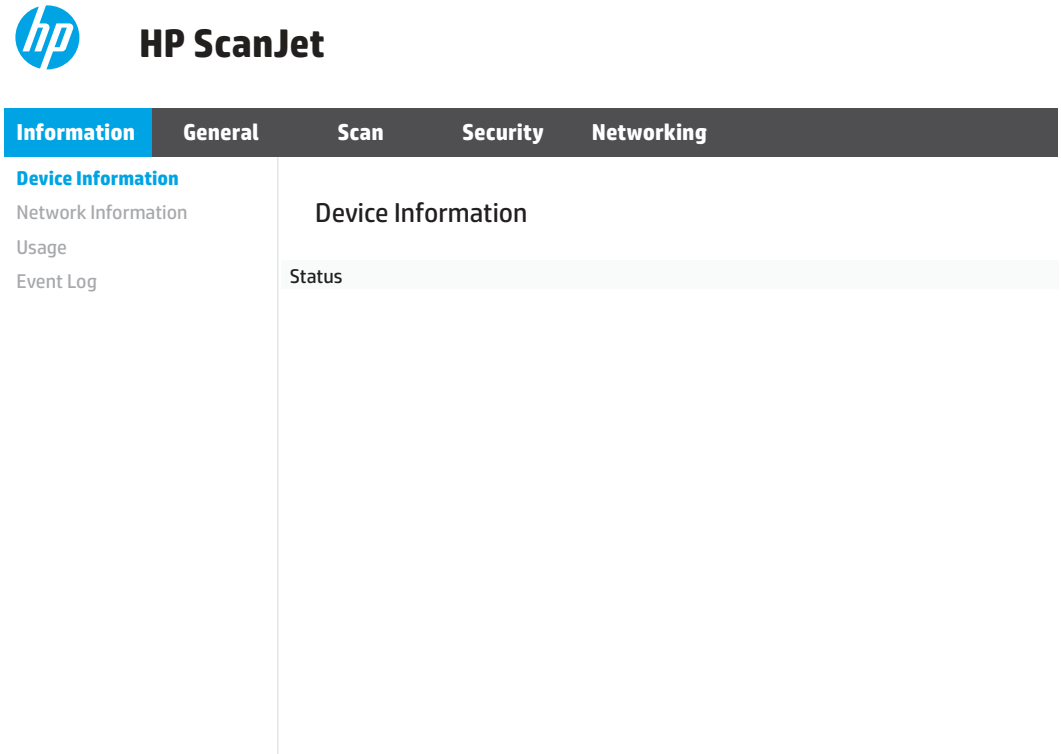

Step three: Configure the Scan to Email feature

Use **Scan to E-mail Setup** in the HP Embedded Web Server (EWS) for basic configuration.

1. Among the EWS top navigation tabs, click the **Scan** tab.
2. In the left navigation pane, click **Scan to E-mail Setup**.
3. In the **E-mail Address** area, enter the sender's email address for the new outgoing email profile in the **From E-mail Address** field.
4. In the **SMTP Server Settings** area, complete the following fields:
   - In the **SMTP Server** field, enter the address of the SMTP server.
   - In the **SMTP Port** field, enter the SMTP port number.

     NOTE: In most cases, the default port number does not need to be changed.

     NOTE: If you are using a hosted SMTP service such as Gmail, verify the SMTP address, port number, and SSL settings from the service provider's website or other sources. Typically, for Gmail, the SMTP address is smtp.gmail.com, port number 465, and the SSL should be enabled. Please refer to online sources to confirm these server settings are current and valid at the time of configuration.

   - If you are using Gmail for email service, select the **Always use secure connection (SSL/TLS)** check box.

5. If the SMTP server requires authentication to send an email, complete the following fields in the **SMTP Authentication** area:
   - In the **SMTP User ID** field, enter the user ID for the SMTP server.
   - In the **SMTP Password** field, enter the password for the SMTP server.
6. Review all the information, and then click one of the following options:
   - **Save and Test**: Select this option to save the information and test the connection.
   - **Save Only**: Select this option to save the information without testing the connection.

Step four: Add contacts to the Email Address Book

In the left navigation pane, click **E-mail Address Book Setup** to add email addresses to the address book accessible from the product.

To add an individual email address:

1. In the **E-mail Address** field, enter the email address of the new email contact.
2. Click **Save**.

Step five: Configure the default Settings for Scan to Email

In the left navigation pane, click **Scan Settings** to configure the default Scan to Email settings.

1. In the **Default Settings for Scan to E-Mail** area, configure the following email settings:

Table 2-1 Email settings

Option	Description
Subject	Provide a default subject line for the email messages.
Body Text	Create a custom default message for all emails sent from the product.

2. Configure the following file scan settings:

Table 2-2 File scan settings

Option	Description
File Name Prefix	Set the default file name prefix used for files saved to a network folder.
File Name	Default file name for the file to be saved.
File Name Suffix	Set the default file name suffix used for files saved to a network folder.
File Name Preview	Enter a file name, and then click **Update Preview**.
File Type	Select the default file type for the scanned document.
PDF Type	Select the default PDF type for the scanned document.
Resolution	Select the default scan resolution for the scanned document. NOTE: Higher resolution images have more dots per inch (dpi), so they show more detail. Lower resolution images have fewer dots per inch and show less detail, but the file size is smaller.

Table 2-2 File scan settings (continued)

Option	Description
Color	Select whether scanned files will be in black and white or in color.
De-skew	Select **On** or **Off** to enable or disable image skew correction.
Delete Blank Page	Select **On** or **Off** to indicate whether blank pages should be removed from the scanned output.
Misfeed Detection	Select **On** or **Off** to enable or disable the detection of multiple pages fed simultaneously into the document feeder.
Combine Documents	Select **On** or **Off** to indicate whether multiple documents should be combined into one scanned output file.
JPEG file compression	Select a compression value for JPEG file.

3. Click **Apply** at the bottom of the screen.

Set up Scan to Network Folder

The following steps describe how to set up Scan to Network Folder.

Step one: Gather network information

Before you begin to set up the Scan to Network Folder feature, gather the following information and get prepared.

NOTE: To set up the Scan to Network Folder feature, the product must have an active network connection to the same network as the computer that will run the setup process.

Administrators need the following items before beginning the configuration process.

- Administrative access to the product
- The fully-qualified domain name (FQDN) (e.g., \\servername.us.companyname.net\scans) of the destination folder or the IP address of the server (e.g., \\16.88.20.20\scans).

NOTE: The use of the term "server" in this context refers to the computer where the shared folder resides.

Step two: Access the HP Embedded Web Server (EWS)

To access the HP Embedded Web Server (EWS), complete the following steps:

1. From the Home screen on the product control panel, touch the Network icon or according to your network connection method, and then touch Wireless or Wired (LAN) to display the IP address or host name.
2. Open a web browser, and in the address line, type the IP address or host name exactly as it displays on the product control panel. Press the Enter key on the computer keyboard. The EWS opens.

Figure 2-3 Example of an IP address in a web browser

NOTE: If the web browser displays a message indicating that accessing the website might not be safe, select the option to continue to the website. Accessing this website will not harm the computer.

Figure 2-4 Example of the EWS screen

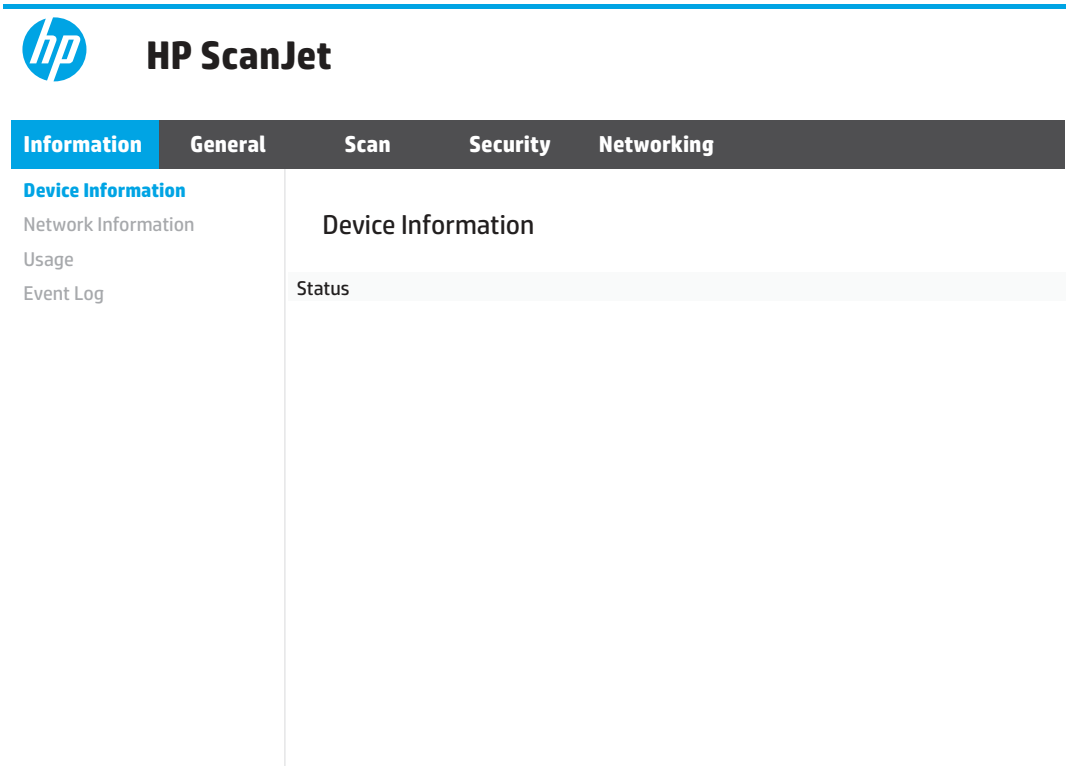

Step three: Configure the Scan to network feature

Use **Network Folder Setup** in the HP Embedded Web Server (EWS) for basic configuration.

1. Among the EWS top navigation tabs, click **Scan**.
2. In the left navigation pane, click **Network Folder Setup**.
3. On the **Network Folder Setup** page, click the **New** button.
4. In the **Scan Settings** area, complete the following fields:

Table 2-3 File scan settings

Option	Description
File Name Prefix	Set the default file name prefix used for files saved to a network folder.
File Name	Default file name for the file to be saved.
File Name Suffix	Set the default file name suffix used for files saved to a network folder.
File Name Preview	Enter a file name, and then click **Update Preview**.
File Type	Select the default file type for the scanned document.
PDF Type	Select the default PDF type for the scanned document.

Table 2-3 File scan settings (continued)

Option	Description
Resolution	Select the default scan resolution for the scanned document. NOTE: Higher resolution images have more dots per inch (dpi), so they show more detail. Lower resolution images have fewer dots per inch and show less detail, but the file size is smaller.
Color	Select whether scanned files will be in black and white or in color.
De-skew	Select **On** or **Off** to enable or disable image skew correction.
Delete Blank Page	Select **On** or **Off** to indicate whether blank pages should be removed from the scanned output.
Misfeed Detection	Select **On** or **Off** to enable or disable the detection of multiple pages fed simultaneously into the document feeder.
Combine Documents	Select **On** or **Off** to indicate whether multiple documents should be combined into one scanned output file.
JPEG file compression	Select a compression value for JPEG file.

5. In the **Network Folder Information** area, complete the following fields:
   - In the **Display Name** field, enter the name to display for the folder.
   - In the **Network Path** field, enter the network path to the folder.
   - In the **Username** field, enter the user name needed to access the folder on the network.
   - In the **Password** field, enter the password needed to access the folder on the network.
6. Review all the information, and then click one of the following options:
   - **Save and Test**: Select this option to save the information and test the connection.
   - **Save Only**: Select this option to save the information without testing the connection.
   - **Cancel**: Select this option to quit the configuration without saving.

Set up Scan to USB Drive

The product can scan a file and save it on a USB flash drive. Before using this feature, follow the steps below to enable and configure it.

Step one: Access the HP Embedded Web Server (EWS)

To access the HP Embedded Web Server (EWS), complete the following steps:

1. From the Home screen on the product control panel, touch the Network icon or according to your network connection method, and then touch Wireless or Wired (LAN) to display the IP address or host name.

2. Open a web browser, and in the address line, type the IP address or host name exactly as it displays on the product control panel. Press the Enter key on the computer keyboard. The EWS opens.

Figure 2-5 Example of an IP address in a web browser

NOTE: If the web browser displays a message indicating that accessing the website might not be safe, select the option to continue to the website. Accessing this website will not harm the computer.

Figure 2-6 Example of the EWS screen

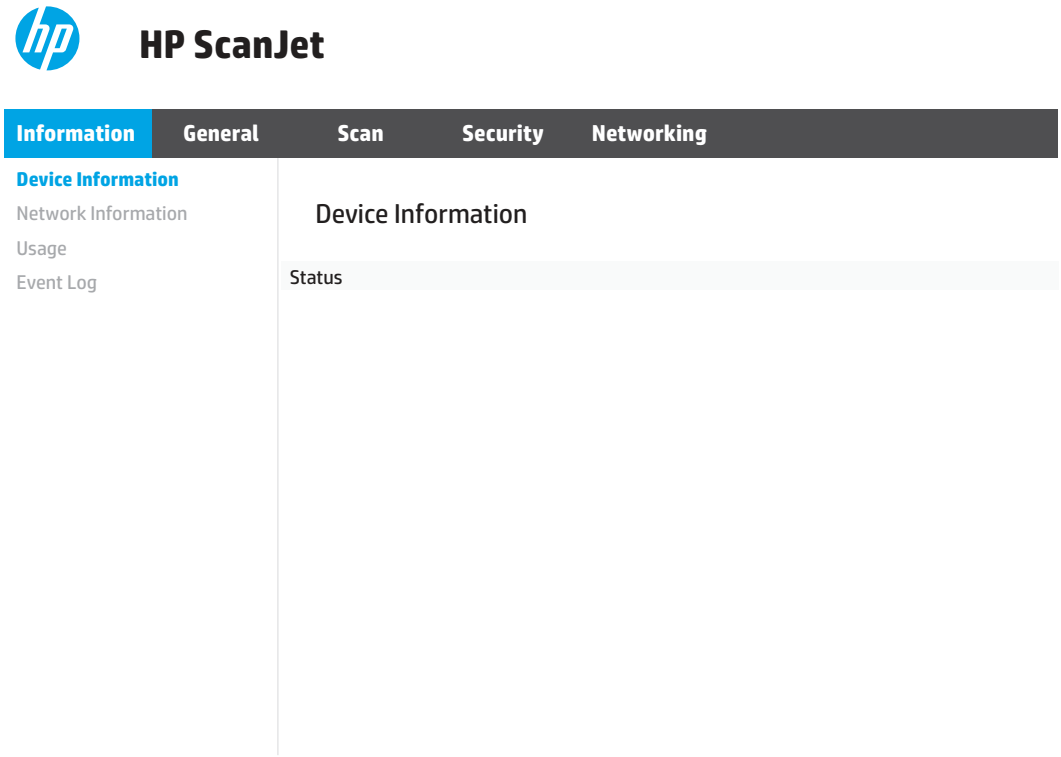

Step two: Configure the default settings for Scan to USB Drive

To configure the default Scan to USB Drive settings:

1. Among the EWS top navigation tabs, click the **Scan** tab.
2. In the left navigation pane, click **Scan Settings**.
3. In the **Default Settings for Scan to USB** area, enter a folder name for **Stored Folder**, and then configure the following settings:

Table 2-4 File scan settings

Option	Description
File Name Prefix	Set the default file name prefix used for files saved to a network folder.
File Name	Default file name for the file to be saved.
File Name Suffix	Set the default file name suffix used for files saved to a network folder.
File Name Preview	Enter a file name, and then click **Update Preview**.

Table 2-4 File scan settings (continued)

Option	Description
File Type	Select the default file type for the scanned document.
PDF Type	Select the default PDF type for the scanned document.
Resolution	Select the default scan resolution for the scanned document. NOTE: Higher resolution images have more dots per inch (dpi), so they show more detail. Lower resolution images have fewer dots per inch and show less detail, but the file size is smaller.
Color	Select whether scanned files will be in black and white or in color.
De-skew	Select **On** or **Off** to enable or disable image skew correction.
Delete Blank Page	Select **On** or **Off** to indicate whether blank pages should be removed from the scanned output.
Misfeed Detection	Select **On** or **Off** to enable or disable the detection of multiple pages fed simultaneously into the document feeder.
Combine Documents	Select **On** or **Off** to indicate whether multiple documents should be combined into one scanned output file.
JPEG file compression	Select a compression value for JPEG file.

4. Click **Apply** at the bottom of the screen.

Set up Scan to SharePoint

The following steps describe how to set up Scan to SharePoint.

Step one: Prepare

Before you begin to set up the Save to SharePoint feature, make the following preparations.

Administrators need the following items before beginning the configuration process.

- Administrative access to the product.
- The destination folder that the scanned files will be saved to must exist on the SharePoint site, and write access must be enabled to the destination folder.

Step two: Access the HP Embedded Web Server (EWS)

To access the HP Embedded Web Server (EWS), complete the following steps:

1. From the Home screen on the product control panel, touch the Network icon or according to your network connection method, and then touch Wireless or Wired (LAN) to display the IP address or host name.
2. Open a web browser, and in the address line, type the IP address or host name exactly as it displays on the product control panel. Press the Enter key on the computer keyboard. The EWS opens.

Figure 2-7 Example of an IP address in a web browser

NOTE: If the web browser displays a message indicating that accessing the website might not be safe, select the option to continue to the website. Accessing this website will not harm the computer.

Figure 2-8 Example of the EWS screen

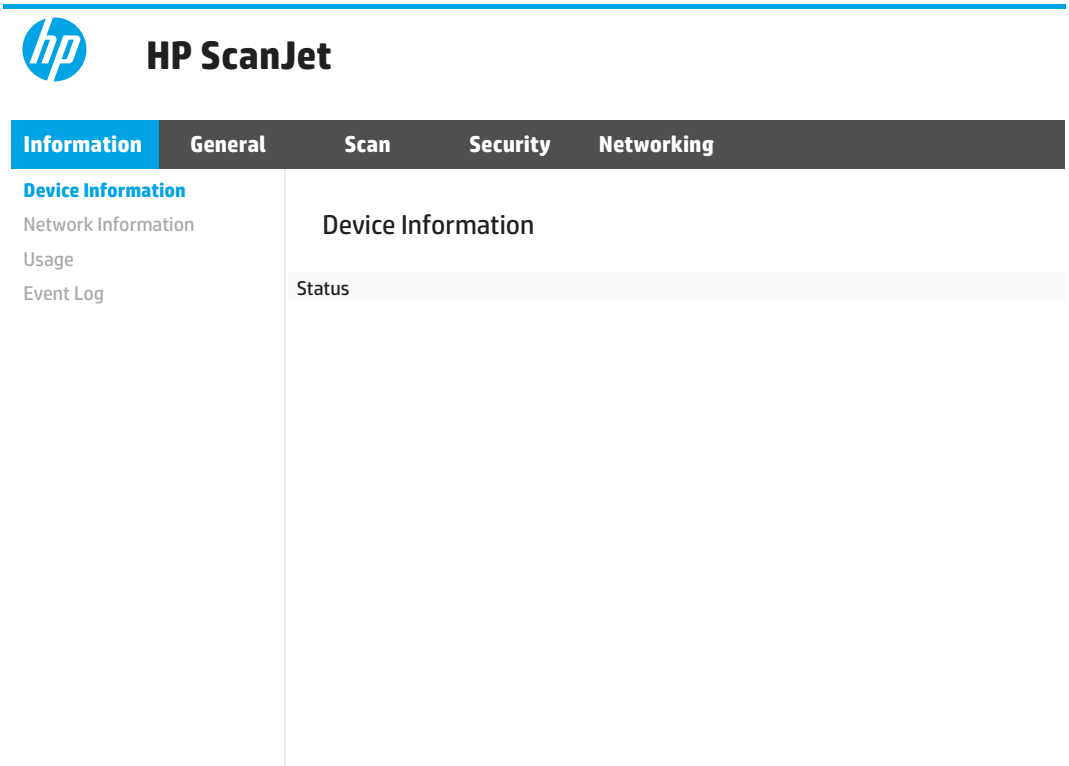

Step three: Configure the Scan to SharePoint feature

Use **SharePoint Setup** in the HP Embedded Web Server (EWS) for basic configuration.

1. Among the EWS top navigation tabs, click the **Scan** tab.
2. In the left navigation pane, click **SharePoint Setup**.
3. On the **SharePoint Setup** page, click the **New** button.
4. In the **Scan Settings** area, complete the following fields:

Table 2-5 File scan settings

Option	Description
File Name Prefix	Set the default file name prefix used for files saved to a network folder.
File Name	Default file name for the file to be saved.
File Name Suffix	Set the default file name suffix used for files saved to a network folder.
File Name Preview	Enter a file name, and then click **Update Preview**.
File Type	Select the default file type for the scanned document.
PDF Type	Select the default PDF type for the scanned document.

Table 2-5 File scan settings (continued)

Option	Description
Resolution	Select the default scan resolution for the scanned document. NOTE: Higher resolution images have more dots per inch (dpi), so they show more detail. Lower resolution images have fewer dots per inch and show less detail, but the file size is smaller.
Color	Select whether scanned files will be in black and white or in color.
De-skew	Select **On** or **Off** to enable or disable image skew correction.
Delete Blank Page	Select **On** or **Off** to indicate whether blank pages should be removed from the scanned output.
Misfeed Detection	Select **On** or **Off** to enable or disable the detection of multiple pages fed simultaneously into the document feeder.
Combine Documents	Select **On** or **Off** to indicate whether multiple documents should be combined into one scanned output file.
JPEG file compression	Select a compression value for JPEG file.

5. In the **SharePoint Information** area, complete the following fields:
   - In the **Display Name** field, enter the name to display for the SharePoint path.
   - In the **Network Path** field, enter the SharePoint path.
   - If you want the product to overwrite an existing file that has the same file name as the new file, select **Overwrite existing files**.
   - In the **Windows Domain** field, enter the domain name.
   - In the **Username** field, enter the user name needed to access the SharePoint path.
   - In the **Password** field, enter the password needed to access the SharePoint path.
6. Review all the information, and then click one of the following options:
   - **Save and Test**: Select this option to save the information and test the connection.
   - **Save Only**: Select this option to save the information without testing the connection.
   - **Cancel**: Select this option to quit the configuration without saving.

Set up access control

The **Access Control** option in the HP Embedded Web Server (EWS) provides controls to manage the scanner features users can access.

NOTE: If the administrator has set a password to limit access to the EWS, the password is required before setting up access control.

1. From the Home screen on the product control panel, touch the Network icon or according to your network connection method, and then touch Wireless or Wired (LAN) to display the IP address or host name.

2. Open a web browser, and in the address line, type the IP address or host name exactly as it displays on the product control panel. Press the Enter key on the computer keyboard. The EWS opens.

   Figure 2-9 Example of an IP address in a web browser

NOTE: If the web browser displays a message indicating that accessing the website might not be safe, select the option to continue to the website. Accessing this website will not harm the computer.

3. Among the EWS top navigation tabs, click the **Security** tab.
4. In the left navigation pane, click **Access Control**.
5. Select **Enable Access Control**.
   - If you want to use the current user account, click **Edit** to set a PIN code and select scanner features that you want the current user account to access.
   - If you want to create a new user account, click **New**. Enter an account name, set a PIN code, and then select scanner features that you want this user account to access.
6. Click **OK**.

Once the access control has been set up, users cannot access the disabled scanner features and need to enter the PIN to use the enabled scanner features.

Load originals

The following topics describe how to load originals into the input tray.

Document loading tips

Use the following tips to load originals correctly.

- The maximum capacity of the input tray is 60 sheets of 80 g/m^2 (24 lb) paper (2600 f1 and 3600 f1 models) or 100 sheets of 80 g/m^2 (24 lb) paper (N4600 fnw1 and N6600 fnw1 models). When using heavier paper, the maximum capacity is decreased.

TIP: Use the lines on the input tray paper guides to help you to not exceed the input tray capacity.

- Be sure that original documents are within these guidelines:

Table 2-6 Supported paper size and weight

Item	Size
Width:	**2600 f1 and 3600 f1 models:** 89 to 216 mm (3.5 to 8.5 in) **N4600 fnw1 and N6600 fnw1 models:** 105 to 216 mm (4.1 to 8.5 in)
Length:	**2600 f1 and 3600 f1 models:** 148 to 3100 mm (5.8 to 122 in) **N4600 fnw1 and N6600 fnw1 models:** 148 to 5362 mm (5.8 to 211 in)
Weight:	**2600 f1 models:** 60 g/m^2 (16 lb) to 105 g/m^2 (28 lb) **3600 f1 models:**49 g/m2 (13 lb) to 120 g/m2 (32 lb)

Table 2-6 Supported paper size and weight (continued)

Item	Size
	N4600 fnw1 and N6600 fnw1 models: 45 g/m^2 (12 lb) to 120 g/m^2 (32 lb)

- Scanning the following types of documents might result in paper jams or damage to the documents.

Table 2-7 Inappropriate types of documents

Example	Document type	Example	Document type
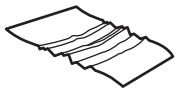	Wrinkled or creased documents	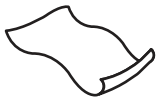	Curled documents
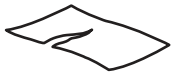	Torn documents	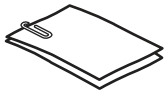	Documents with paper clips or staples
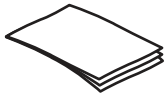	Carbon paper		Coated paper
	Extremely thin, translucent paper		Paper with adhesive notes or flags attached
	Photos		Overhead transparencies
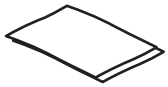	Papers that are stuck together		Paper where the toner has not fully dried, or with wet substances such as glue or correction fluid

- Smooth out any folds or curls in your documents before placing them into the feeder. If the leading edge of a document is curled or folded, it might cause a paper jam.
- To scan fragile documents (such as photos or documents on wrinkled or very lightweight paper), place the document on the flatbed scanner glass.
- Make sure that the document feeder hatch is securely latched.
- Adjust the paper guides to the width of the documents. Make sure that the paper guides touch the edges of the original. If there is any clearance between the paper guides and the edges of the documents, the scanned image might be skewed.

Supported paper sizes and types

Supported paper types and sizes for the product are shown below.

Table 2-8 Supported paper size limit for the input tray

Name	Description
Minimum paper size	**2600 f1 and 3600 f1 models:** 148 x 89 mm (5.8 x 3.5 in) **N4600 fnw1 and N6600 fnw1 models:** 148 x 105 mm (5.8 x 4.1 in)
Maximum paper size	**2600 f1 and 3600 f1 models:** 3100 x 216 mm (122 x 8.5 in) **N4600 fnw1 and N6600 fnw1 models:** 5362 x 216 mm (211 x 8.5 in)

Table 2-9 Supported paper size limit for the flatbed scanner

Name	Description
Maximum paper size	216 x 356 mm (8.5 x 14 in)

Table 2-10 Supported paper sizes

Size and dimensions	Flatbed scanner	Input tray
U.S.-Letter: 215.9 x 279.4 mm (8.5 x 11 in)	✓	✓
U.S.-Legal: 215.9 x 355.6 mm (8.5 x 14 in)	✓ (N4600 fnw1 and N6600 fnw1 models only)	✓
U.S.-Executive: 184.2 x 266.7 mm (7.25 x 10.5 in)	✓	✓
ISO A4: 210 x 297 mm (8.3 x 11.7 in)	✓	✓
JIS B5: 182 x 257 mm (7.2 x 10.1 in)	✓	✓
ISO B5: 176 x 250 mm (7 x 9.9 in)	✓	✓
ISO A5: 148 x 210 mm (5.8 x 8.3 in)	✓	✓
ISO A6: 105 x 148 mm (4.1 x 5.8 in)	✓	✓

Load documents in the input tray

To scan same-sized documents, use the input tray to load them.

Before loading the documents in the input tray, make sure to follow these guidelines:

- Use the recommended paper type and size in the input tray. Refer to the Supported paper sizes and types section for paper capacities and capabilities.
- Smooth any folds or curls in the pages to avoid paper jams.

1. Fan through the pages to remove any staples, paper clips, or sticky notes.

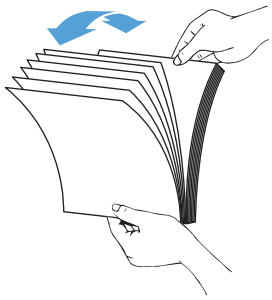

2. Tap the long edge of the pages on a flat surface, then rotate and tap the top edge of the document pages to align the edges of the document pages.

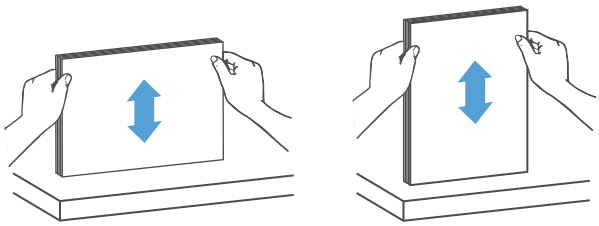

3. Load the pages with the face up and the top edge of the pages into the input tray.

NOTE: Do not tap the edge of the document stack or drop the paper stack into the input tray.

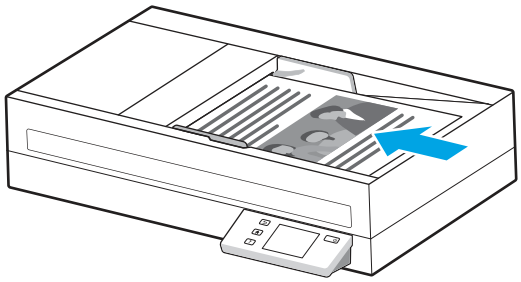

4. Slide the paper guides to fit the width of the document. If there is any gap between the paper guides and the edges of the documents, the scanned image might be skewed.

NOTE: Make sure not to push the paper guides so tightly as they bend the documents.

When loading small documents like checks, place the longest edge parallel to the paper width guides.

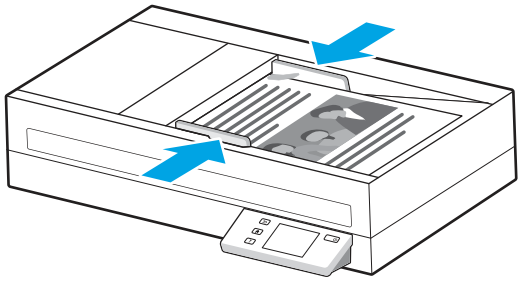

5. Open the output tray and extension.

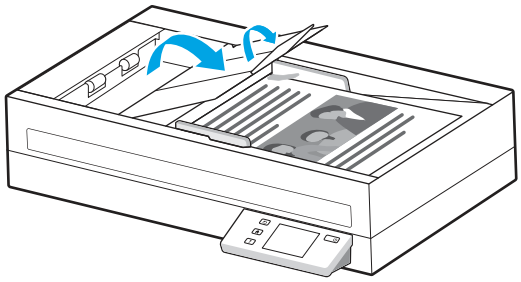

The documents are now ready to be scanned.

Load documents on the scanner glass

To scan fragile documents (such as photos or documents on wrinkled or very light paper), place the document face down on the scanner glass.

1. Open the scanner lid.
2. Load the document on the scanner glass face down according to the indicators on the product.

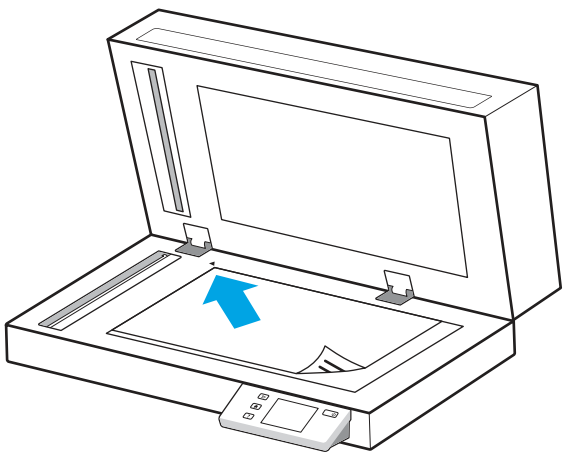

3. Close the scanner lid.

   The document is now ready to be scanned.

Start a scan from the hardware

Learn how to start a scan from the control panel.

Scan from the control panel buttons (2600 f1 and 3600 f1 models)

To scan from the control panel, follow these steps:

1. Load the original into the input tray or on the scanner glass.
2. Press the Shortcut Select button ☰ to select a scan shortcut to be performed (for example: Scan to PDF PDF).
3. Press the Default/Duplex Toggle button to set a default or two-sided scan. (Default: one-sided or two-sided, depending on which one you have set as default for the Scan To Computer shortcut.)
4. Press the Scan button ◇.

TIP: To cancel a scan, press the Cancel button ✕ on the control panel.

Scan from the touch screen (N4600 fnw1 and N6600 fnw1 models)

The following topics describe how to scan from the touch screen.

Scan to a computer

To scan to a computer, follow these steps:

1. Load the original into the input tray or on the scanner glass.
2. From the Home screen on the product control panel, touch To Computer.
3. The scanner displays a list of computers that have the HP software installed and are enabled to receive scans from the scanner. Select a computer to receive the scan.
4. If you want to change scan settings:
   - Touch Shortcut to select a different scan shortcut.
   - Touch Sides to switch among default, one-sided, and two-sided settings. (Default: one-sided or two-sided, depending on which one you have set as default for the Scan To Computer shortcut.)
5. Touch Scan. The scan will be sent to the selected computer.

Scan to a network location

To scan to a network location, follow these steps:

1. Load the original into the input tray or on the scanner glass.
2. From the Home screen on the product control panel, touch To Network Folder.
3. If you have set up multiple network destinations, the scanner displays a list of network folders. Select a network folder to receive the scan.
4. If prompted, enter PIN password.
5. If you want to configure scan settings:
   - Touch Options to change file type, resolution, color, or other advanced settings.
   - Touch Sides to switch between one-sided and two-sided settings.

6. Touch Scan.

Scan to email

To scan to an email, follow these steps:

1. Load the original into the input tray or on the scanner glass.
2. From the Home screen on the product control panel, touch To Email.
3. Follow the onscreen instructions to select or enter an email address.
4. If you want to configure scan settings:
   - Touch Options to change file type, resolution, color or other advanced settings.
   - Touch Sides to switch between one-sided and two-sided settings.
5. Touch Scan.

Scan to a Microsoft SharePoint site

Use Save to SharePoint to scan documents directly to a Microsoft SharePoint site. This feature eliminates the need to scan the documents to a network folder, USB flash drive, or email message, and then manually upload the files to the SharePoint site.

1. Load the original into the input tray or on the scanner glass.
2. From the Home screen on the product control panel, touch Scan to SharePoint.
3. If you have set up multiple SharePoint destinations, the scanner displays a list of SharePoint folders. Select a SharePoint folder to receive the scan.
4. If you want to configure scan settings:
   - Touch Options to change file type, resolution, color, or other advanced settings.
   - Touch Sides to switch between one-sided and two-sided settings.
5. Touch Scan.

Scan to a USB flash drive

The product can scan a file and save it on a USB flash drive. Before using this feature, use the HP Embedded Web server to enable and configure it.

1. Load the original into the input tray or on the scanner glass.
2. Insert the USB flash drive into the USB port.
3. From the Home screen on the product control panel, touch Scan to USB Drive.
4. If you want to configure scan settings:
   - Touch Options to change file type, resolution, color, or other advanced settings.
   - Touch Sides to switch between one-sided and two-sided settings.
5. Touch Scan.

Use the scanning software (Windows)

The following topics describe how to use the scanning software.

Work with scan shortcuts

Scan shortcuts provide a fast, efficient way to select the settings for frequently performed scanning tasks. Use HP Scan software to create and modify scan shortcuts.

View scan shortcuts

To view existing scan shortcuts, open HP Scan. Existing scan shortcuts will display in a list to the left.

Create scan shortcuts

To create a scan shortcut, follow these steps:

1. Open the HP Scan software.
2. Click **Create New Scan Shortcut**.
3. Enter a name for the new shortcut.
4. Choose to create the new shortcut from current settings, or a previous existing shortcut.
5. Click **Create**.
6. Modify the settings for the new scan shortcut. Click **More** for more settings.
7. Click the **Save** icon next to the name of the new shortcut in the shortcut list to save the modifications to the shortcut, or click the **Undo** icon to undo modifications.

Modify shortcuts

To modify a scan shortcut, follow these steps:

1. Open the HP Scan software.
2. Select the shortcut to be modified from the list to the left.
3. Change settings on the right side of the screen. Click **More** for more settings.
4. Click the **Save** icon to the right of the shortcut name to save changes.

Scan to a picture

To save your scan as a picture, follow these steps:

1. Load the original into the input tray or on the scanner glass.
2. Open the HP Scan software.
3. Follow one of the steps:
   - Select **Save as JPEG** or **Email as JPEG**, and then click **Scan**.

- Choose any other scan shortcut, change the **Item Type** to **Photo**, select a picture file type from the **File Type** drop-down list, and then click **Scan**.

Scan to a PDF

To save your scan as a PDF, follow these steps:

1. Load the original into the input tray or on the scanner glass.
2. Open the HP Scan software.
3. Follow one of the steps:
   - Select **Save as PDF** or **Email as PDF**, and then click **Scan**.
   - Choose any other scan shortcut and select **PDF**, **Searchable PDF (.PDF)**, or **PDF/A (.PDF)** from the **File Type** drop-down list, and then click **Scan**.

Scan text for editing (OCR)

The HP Scan software uses optical character recognition (OCR) to convert text on a page to text that can be edited on a computer. The OCR software comes with the HP Scan software. For information about using the OCR software, see **scan text for editing** in the online Help.

Scan to email

Learn how to scan to email by using the HP Scan software.

NOTE: To scan to email, make sure there is an Internet connection.

1. Load the original into the input tray or on the scanner glass.
2. Open the HP Scan software.
3. Follow one of the steps:
   - Select **Email as PDF** or **Email as JPEG**, and then click **Scan**.
   - Choose any other scan shortcut and select **Email** from the **Send To** drop-down list, and then click **Scan**.

Scan to cloud

Learn how to scan to cloud by using the HP Scan software.

NOTE: To scan to the cloud, make sure there is an Internet connection.

1. Load the original into the input tray or on the scanner glass.
2. Open the HP Scan software.
3. Select **Send to Cloud**, and then select the file destination.
4. Select **Scan**.

Scan to FTP

You can upload a scanned image to a FTP folder by using the HP Scan software.

1. Load the original into the input tray or on the scanner glass.
2. Open the HP Scan software.
3. Select a scan shortcut. From the **Destination** area, select **Send to**.
4. Select a FTP folder as destination. If this is the first time you have used this feature, click **Add** to set up an FTP destination first.
5. Click **OK**, and then click **Scan**.

Scan to SharePoint

You can upload a scanned image to a SharePoint site directly by using the HP Scan software.

1. Load the original into the input tray or on the scanner glass.
2. Open the HP Scan software.
3. Select a scan shortcut. From the **Destination** area, select **Send to**.
4. Select a SharePoint site as destination. If you haven't set up this feature before, click **Add** to set up a SharePoint site destination first.
5. Click **OK**, and then click **Scan**.

Scan long or extra-long documents

By default, the scanner automatically detects page size using the **Detect Size** selection for page lengths less than or equal to 356 mm (14 in).

For long or extra-long documents, select **Long (8.50 x 34 inches)** or **Extra Long (8.50 x 122 inches)** from the page size drop-down list in the scan shortcut settings.

NOTE: Only one page at a time can be scanned when using a long or extra-long page setting.

If the scanner is set to scan long or extra-long pages, it will scan one page at a time. Using this setting to scan regular pages will slow down the process and should only be used to scan pages longer than 356 mm (14 in).

Detect multi-feeds

The multi-feed detection feature stops the scan process if it senses that multiple pages are fed into the scanner at one time. This feature is enabled by default.

Disabling this feature might be helpful when scanning:

- Multipart forms (a use that HP does not recommend).
- Documents which have labels or sticky notes attached to them.

NOTE: Use the ISIS, WIA, or TWAIN user interface to enable multi-feed detection when scanning from non-HP software.

Everyday Scan

The **Everyday Scan** shortcut allows users to define and save a scan shortcut for their everyday needs. The following **Scan Shortcut Settings** are customizable when the **Everyday Scan** shortcut is selected:

- **Item Type**

- Page Sides
- Page Size
- Color Mode
- Destination/File Type

Automatically delete blank pages

When the **Delete blank pages** feature is enabled, scanned pages are evaluated for content. Pages detected as blank show up in the viewer with a delete notation on them. These detected blank pages are deleted automatically when the scan is saved to the destination.

1. Open the HP Scan software.
2. Select a scan shortcut.
3. Click **More**. Select the **Document** tab, select **Delete blank pages** from the **Adjust documents** drop-down box, and then click **OK**.

TIP: The **Sensitivity** slider allows you to adjust the sensitivity value on how blank pages are detected and deleted. At the lower end of the slider, more pages are detected as blank and deleted. At the upper end of the slider, pages must be almost completely blank to be detected and deleted. The sensitivity value can be also set by entering a value or clicking the arrow buttons.

Automatically adjust page orientation

Use this feature to automatically adjust page orientation by language.

1. Open the HP Scan software.
2. Select a scan shortcut.
3. Click **More**. Under the **Scan** tab, select the **Page Orientation** drop-down box, and then select the **Auto Orient** check box.
4. Select a document language, click **OK**, and then start scan.

Reserved Jobs (N4600 fnw1 and N6600 fnw1 models)

The **Reserved Jobs** feature allows you to initiate a job from the HP Scan software on the computer with preset options, and then trigger the job on the scanner, saving trips between the scanner and the computer.

1. If this is the first time you have used this feature, you need to reserve a scan job from the HP Scan software first.
   a. On your computer, open the HP Scan software, and then click **Job Reservation**.
   b. In the **Job Reservation Settings** dialog box, select **Enable Reservation**.
   c. If you want to set a PIN, select **Use PIN**, enter a PIN, and then click **OK**.
2. Select a scan shortcut, change settings if needed, and then click **Scan**.
3. Go to the scanner. Load the original into the input tray or on the scanner glass.
4. From the Home screen on the control panel, touch **Reserved Jobs** to start scan.

Filter out color from a document (color dropout)

You can filter out a color channel (red, green, or blue) or up to three individual colors. For specific colors, the sensitivity setting controls how closely a scanned color must approximate the specified color.

Removing colors from the scan might reduce the scan file size and improve optical character recognition (OCR) results.

To select colors to eliminate from a scan in HP Scan software, follow these steps:

1. Open the HP Scan software.
2. Scan a sample page, which has the colors to be dropped, into the viewer.
3. Click the **More** button, and then click the **Image** tab and select the **Color Dropout** feature.
4. Enable a color to drop and select the color from the preview using the eyedropper tool. Be sure to save the colors.

Only the color dropout options available for your scanner are selectable.

For information about the color dropout settings, see the online help for the scanning software that you are using.

Automatically detect page size

The HP Scan software is capable of automatically detecting page size using the **Detect Size** option. When the **Detect Size** option is selected from the **Page Size** drop-down list, the scanned image is cropped to the size of the detected page and any skewed content is straightened.

Automatically crop or pad scanned image to selected page size

Use this feature to crop or pad a scanned image to a selected page size.

To automatically crop or pad a scanned image to a selected page size, follow these steps:

1. Open the HP Scan software.
2. Select a scan shortcut, and then click **More** for more settings.
3. Select your crop option from the **Input Page Size** drop-down list.
   - To automatically crop to the content of the document, select **Detect Content on Page**.
   - To automatically crop to the dimensions of the document, select **Detect Size**.

   NOTE: Use the ISIS or TWAIN user interface to set crop options when scanning from non-HP scanning software.

   For information about the auto-crop settings, see the online help for the scanning software that you are using.

4. Make sure the **Same as Input** option is selected for **Output Page Size**, and then click **Scan**.

Automatically detect color

Use this feature to reduce the size of the scanned file by only saving pages that contain color as color scans, and saving all other pages as black and white.

To automatically detect color in a scanned image, follow these steps:

1. Open the HP Scan software.
2. Select a scan shortcut.
3. To adjust the **Auto Detect Color** sensitivity and output mode settings, click **More**, select **Image**.
4. Click on the **Color Mode** drop-down box, and then select **Auto Detect Color**.
5. Select the **Auto Detect Color** drop-down box, change settings, and then click **OK**.
6. Click **Scan**.

NOTE: For information about the automatic color detection settings, see the online help for the scanning software that you are using.

Use the ISIS, WIA, or TWAIN user interface to automatically detect color when scanning from non-HP scanning software.

Scan using text-enhanced black and white mode

Use this feature to enhance the scanned image when scanning black and white text. To use this feature, complete the following steps:

1. Open the HP Scan software.
2. Select a scan shortcut.
3. Click **More**, select the **Image** tab, and then select **Black/White (1 bit)** from the **Color Mode** drop-down box.
4. Select **Threshold for Black/White**, select **Enhance Content**, and then click **OK**.

Automatically straighten scanned images

Use the **Straighten Content** feature to straighten content that is skewed relative to the page dimensions in the source document. Use the **Detect Size** feature to deskew page images that might have become skewed during the scanning process.

1. Open the HP Scan software.
2. Select a scan shortcut.
3. Click **More**, select the **Document** tab, and then select **Straighten Content**.

Add or remove a device

You can use the HP Scan software to add or remove a device on the computer.

1. Open the HP Scan software.
2. Click the Settings icon to open the **Device Settings** window.
3. Do one of the following:
   - To add a device, click the Plus icon +, click **Connect a new device**, and then follow the onscreen instructions.

- To remove a device, select the scanner name from the existing scanner list, and then click the **Delete** button.

  TIP: You can select multiple scanners to delete them at once.

TIP: You can also use HP Scan Assistant to add a new device. Launch **HP Scan Assistant** from the computer desktop, click **Tools**, click **Device Setup & Software**, and then select **Connect a new device**.

Scan by using other scan software

Third-party applications that support TWAIN, ISIS, and WIA are also supported by the scanner.

Use the scanning software (macOS)

The following topics describe how to scan by using the scanning software.

Scan to email

To scan to an email, complete these steps:

NOTE: To scan to email, make sure there is an Internet connection.

1. Load the original into the input tray or on the scanner glass.
2. In the **Applications** folder, double-click the **Apple Image Capture** icon.
3. In the **Image Capture** window, select your scanner from the **Devices** list.

   TIP: For more Apple Image Capture scanning options, click **Show Details**.

4. Select **Mail** in the **Scan To** list to automatically attach the scan to an email message.

   NOTE: If you use an email application other than Apple Mail, you can scan the document to a file and manually attach it to an email, or you can add your email application to the **Scan To** list.

   To add your email application to the list, select **Other**, select your email application, and then click **Choose**.

5. On the resulting email message, enter the email address, subject, and any message text, and then send the email.

HP Easy Scan

To scan from HP Easy Scan:

1. Load the original into the input tray or on the scanner glass.
2. In the **Applications** folder, double-click the **HP Easy Scan** icon.
3. Find the product by its name and ensure it is the selected scanner.
4. Select a scan preset appropriate for the scan job.
5. Click the **Scan** button.
6. Once all the pages have been scanned, click **File** and then **Save**.

7. Specify how and where the file is to be saved, and then click **Save**.

Scan from other applications

An image can be scanned directly into any ICA-compliant application. In the application, look for options to import or acquire images from a scanner.

NOTE: The HP software does not support TWAIN scanning. If the application has import or acquire functions but your HP scanner is not listed, the application might only be searching for scanners that support TWAIN.

Advanced configuration with HP Utility (macOS)

Use the HP Utility to check scanner status or to view or change scanner settings from your computer. You can use the HP Utility when the scanner is connected with a USB cable.

Open HP Utility

To open HP Utility, follow these steps:

1. At the computer, open the **Applications** folder.
2. Select **HP**, and then select **HP Utility**.

HP Utility features

The HP Utility toolbar includes these items:

- **Devices**: Click this button to show or hide Mac products found by the HP Utility.
- **All Settings**: Click this button to return to the HP Utility main view.
- **HP Support**: Click this button to open a browser and go to the HP support website.
- **Supplies**: Click this button to open the HP SureSupply website.
- **Registration**: Click this button to open the HP registration website.
- **Recycling**: Click this button to open the HP Planet Partners Recycling Program website.

HP Utility consists of pages that you open by clicking in the **All Settings** list.

Scanning tips

Use the following tips to optimize scanning performance and scan fragile originals.

Optimize scanning and task speeds

Several settings influence the total time for a scanning job. To optimize scanning performance, consider the following information.

- To optimize performance, make sure the computer meets the recommended system requirements. To view minimum and recommended system requirements, see www.hp.com, and then search for the scanner model plus the word **specifications**.

- Saving a scanned image to a searchable format (for example, searchable PDF) takes more time than saving to an image format because the scanned image is analyzed using optical character recognition (OCR). Verify the need for a searchable output file before selecting a searchable scan format.
- Scanning at a higher resolution than necessary increases scanning time and creates a larger file with no additional benefit. If scanning at a high resolution, set the resolution to a lower level to increase scanning speed.

3 Care and maintenance

This section presents information about how to care for and maintain the scanner.

For the latest maintenance information, visit the product support home page:

- 2600 f1 models: www.hp.com/support/sjpro2600f1
- 3600 f1 models: www.hp.com/support/sjpro3600f1
- N4600 fnw1 models: www.hp.com/support/sjproN4600fnw1
- N6600 fnw1 models: www.hp.com/support/sjflowN6600fnw1

Test and calibrate the touch screen (N4600 fnw1 and N6600 fnw1 models)

To test and calibrate the touch screen, do the following:

1. Select the Settings icon.
2. Select Display.
3. Scroll down and select Screen Recalibration.
4. Follow the onscreen instructions to perform the calibration.
5. Recalibration complete will display when the process is completed.

Clean the product

Occasional cleaning of the scanner helps ensure high-quality scans. The amount of care necessary depends on several factors, including the amount of use and the environment. Perform routine cleaning as necessary.

Clean the scanner glass

Clean the scanner glass periodically, including any time dust or debris is present.

Make sure to have the following items before cleaning:

- Clean, lint-free or micro-fiber cloths
- Glass Cleaner or clean water

⚠ CAUTION: Do not use cleaners that contain abrasives, acetone, benzene, or carbon tetrachloride as these chemicals can damage the scanning glass.

Avoid using isopropyl alcohol as it can leave streaks on the glass.

1. Press the Power button ⏻ to turn off the scanner, and then disconnect the USB cable and power supply from the scanner.

2. Lift up the document feeder.

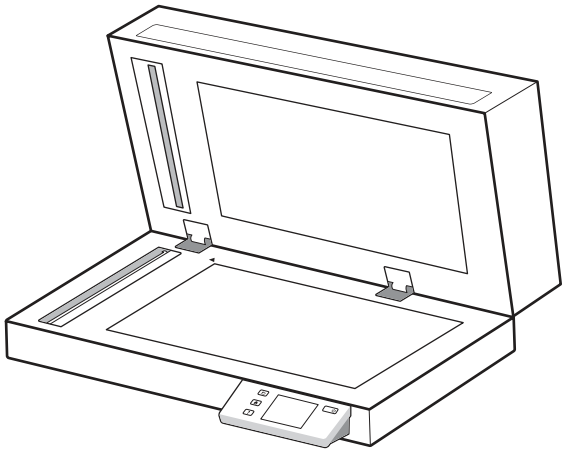

3. Use a clean, lint-free cloth moistened with water or spray the glass cleaner on a clean, lint-free cloth, and then thoroughly clean the flatbed scanner glass.

⚠ CAUTION: Do not spray the glass cleaner directly on the scanner glass as this might cause permanent damage.

4. Dry the scanner glass with a dry, soft, lint-free cloth.

NOTE: Make sure to dry the scanner glass completely.

5. Close the document feeder. Press the Power button ⏻ to turn on the scanner. The scanner is now ready to use.

Clean the scanning strips

To clean the scanning strip components, follow these steps:

1. Press the Power button ⏻ to turn off the scanner, and then disconnect the USB cable and power supply from the scanner.

2. Lift up the document feeder.

3. Clean the scanning strips with a soft, lint-free cloth that has been sprayed with a mild glass cleaner.

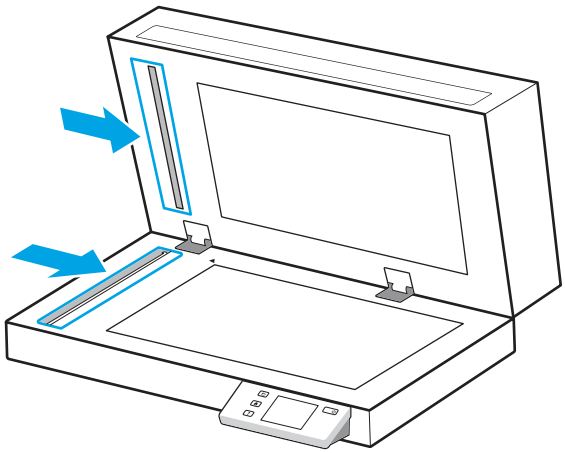

⚠ CAUTION: Use only glass cleaner to clean the scanning strips. Avoid cleaners that contain abrasives, acetone, benzene, and carbon tetrachloride, all of which can damage the scanning strips. Avoid isopropyl alcohol because it can leave streaks on the scanning strips.

Do not spray the glass cleaner directly on the scanning strips.

4. Dry the scanning strips with a dry, soft, lint-free cloth. Wipe the strips of gray, reflective material on each strip.

5. Close the document feeder, reconnect the USB cable and power supply to the scanner, and then press the Power button ⏻ to turn on the scanner. The scanner is now ready to use.

Replace parts

Replacing parts when necessary helps ensure high-quality scans. Parts might need to be replaced when indicated by the HP Scanner Tools Utility, or if the scanner is not working correctly.

The roller replacement kit includes the following replacement parts:

- Pickup rollers
- Separation pad (2600 f1 and 3600 f1 models)
- Separation rollers (N4600 fnw1 and N6600 fnw1 models)

The replacement kit also includes detailed instructions for replacing each of these parts.

Replace the separation pad or rollers

Replace the separation pad/roller module when it is due for maintenance or the scanner experiences repeated document jams.

Replace the separation pad or rollers under the following conditions:

- Windows: When the **Maintenance Recommended** dialog indicates they are due for maintenance.

- If the scanner experiences repeated document jams.

NOTE: The replacement kit is a consumable and is not covered under warranty or standard service agreements.

1. Press the Power button ⏻ to turn off the scanner, and then disconnect the USB cable and power supply from the scanner.

2. Open the document feeder hatch.

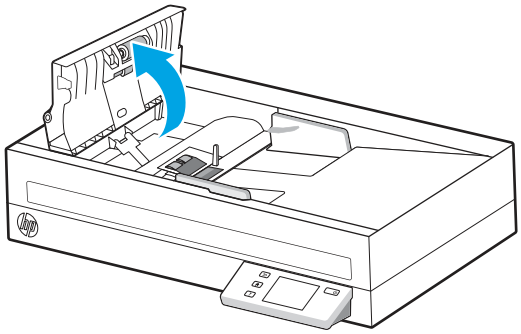

3. Squeeze the tab on the left side of the separation pad/roller module, and then lift it up to remove.

Figure 3-1 Remove separation pad (2600 f1 and 3600 f1 models)

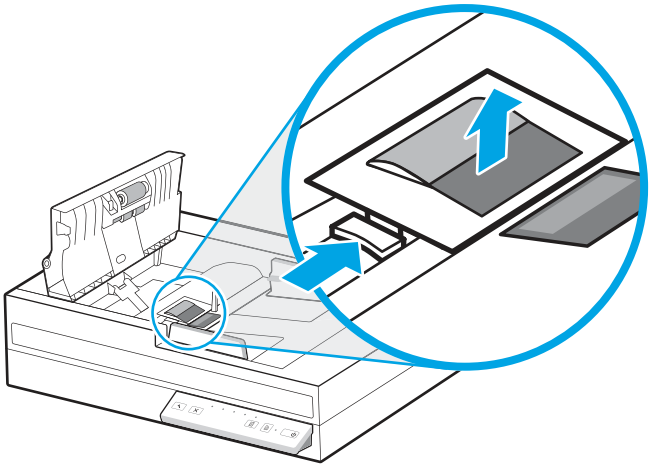

Figure 3-2 Remove separation rollers (N4600 fnw1 and N6600 fnw1 models)

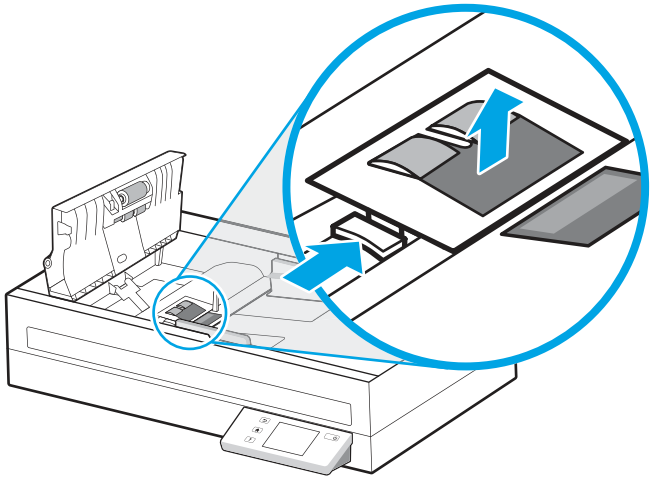

4. Remove and replace the separation pad/roller module as described in the instructions included with the replacement kit.

Figure 3-3 Replace separation pad (2600 f1 and 3600 f1 models)

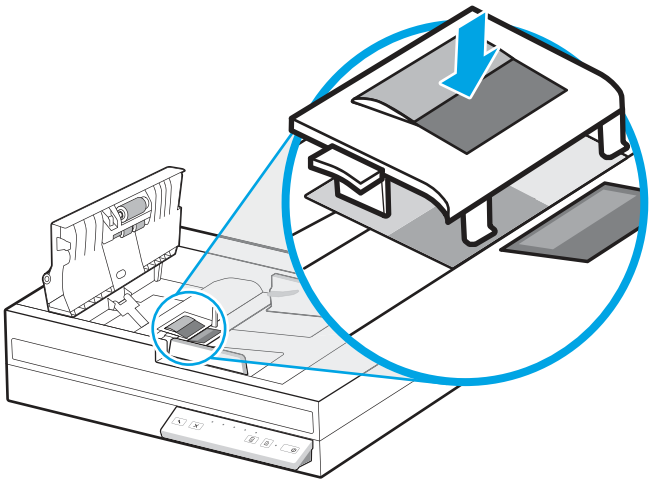

Figure 3-4 Replace separation rollers (N4600 fnw1 and N6600 fnw1 models)

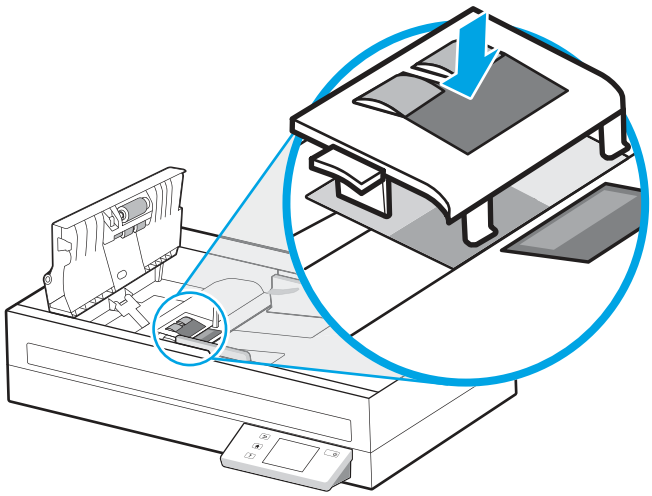

5. Continue with replacing the pick up roller module.

Replace the pickup roller module

Continue to replace the pickup roller module after the separation rollers have been replaced.

1. Squeeze the tab on the left side of the pickup roller module to loose the roller shaft.

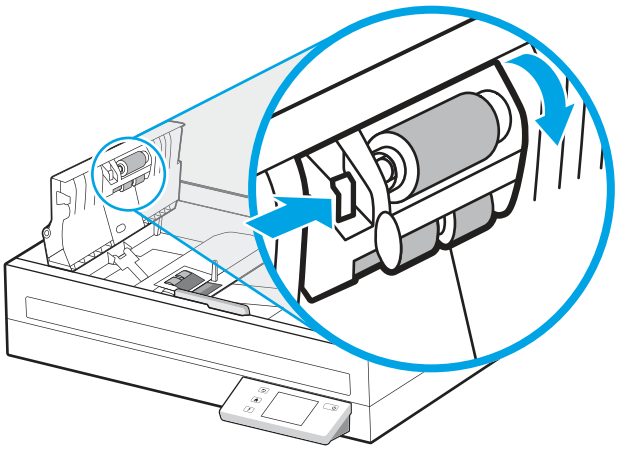

2. Remove the roller shaft from the holder, and then remove the roller module.

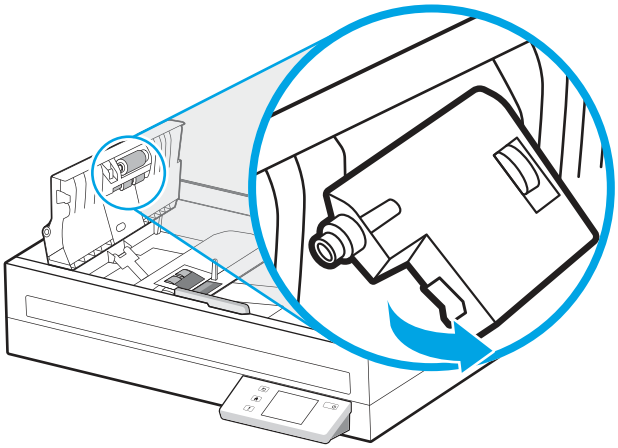

3. Replace the pickup roller module as described in the instructions included with the replacement kit.
4. Close document feeder hatch. Reconnect the USB cable and power supply to the scanner.
5. Press the Power button ⏻ to turn on the scanner.

Order parts and accessories

The maintenance parts in the following table can be ordered online.

To order maintenance parts for the scanner, see the HP scanner parts website at www.hp.com/buy/parts.

Table 3-1 Roller replacement kit

Item	Description	Part number
Service Replacement-SJ A Roller Unit	Replacement pickup roller for 2600 f1, 3600 f1, and N6600 fnw1 models.	4T8E4-69001

Table 3-1 Roller replacement kit (continued)

Item	Description	Part number
Service Replacement-SJ A Separation Unit	Replacement separation roller for N4600 fnw1 and N6600 fnw1 models.	4T8E5-69001
Service Replacement-SJ A Pad Unit	Replacement pad unit for 2600 f1 and 3600 f1 models.	4T8E6-69001
Service Replacement-SJ B Roller Unit	Replacement pickup roller for N4600 fnw1 model.	618J9-69001

4 Solve problems

This section contains solutions for common problems with the scanner. For additional troubleshooting, see the Help for the HP scanning program being used.

Basic troubleshooting tips

Simple issues such as smudges on the scanning strips or loose cables can cause the scanner to produce fuzzy scans, operate in an unexpected manner, or fail to operate. Always check the following items when encountering scanning problems.

- If scanning a document that will be analyzed using optical character recognition (OCR), make sure that the original document is clear enough to be analyzed.
- Make sure that the USB and power cables are firmly seated in their respective connectors on the back of the scanner, and that the power cord is plugged into a working electrical outlet or surge protector.
- Make sure the scanner has not automatically powered off. If it has, press the Power button ⏻ to turn on the scanner.
- Ensure that the scanner is receiving power.
  - Check that the Power LED on the control panel is on.
  - If the Power LED is not on, ensure that power is available to the power outlet or surge protector that the power supply is plugged into.
  - If power is available to the power outlet or surge protector but the Power LED is still not on, the power supply might be defective. Go to the product support home page for assistance:
    - 2600 f1 models: www.hp.com/support/sjpro2600f1
    - 3600 f1 models: www.hp.com/support/sjpro3600f1
    - N4600 fnw1 models: www.hp.com/support/sjproN4600fnw1
    - N6600 fnw1 models: www.hp.com/support/sjflowN6600fnw1
- If the scanning software displays a **Scanner not found** message when trying to use the scanner, turn off the scanner, wait 30 seconds, and then turn on the scanner. If the message still displays, the scanner might need to be reset.
- If the scanner is connected to the computer through a USB hub or through a USB port on the front of the computer, disconnect the scanner and then reconnect it to a USB port on the back of the computer.
- **Windows**: Make sure that the Scan button ◇, or the Default/Duplex Toggle button 🗎 is enabled from the HP scanning software.
- Turn off the scanner, wait 30 seconds, and then turn on the scanner.
- Make sure the document feeder hatch is closed.

- Restart the computer.

If problems continue, it is possible that the HP scanning software, firmware, or associated drivers are out of date or have become corrupted. Visit the product support home page to locate software, firmware, and driver updates for the scanner:

- 2600 f1 models: www.hp.com/support/sjpro2600f1
- 3600 f1 models: www.hp.com/support/sjpro3600f1
- N4600 fnw1 models: www.hp.com/support/sjproN4600fnw1
- N6600 fnw1 models: www.hp.com/support/sjflowN6600fnw1

Reset the scanner(N4600 fnw1 and N6600 fnw1 models)

To reset the scanner, follow these steps:

1. Close the HP Scan software if it is open.
2. Touch the Settings icon from the Home screen on the control panel, select Reset, and then touch Reset.
3. Wait 30 seconds. The scanner resets.

Interpret control panel lights and patterns (2600 f1 and 3600 f1 models)

If the scanner requires attention, the Error light either blinks or is solidly lit on the control panel display.

The following table describes the solution to follow, based on the possible cause of the Error light blinking.

Table 4-1 Cause and solution

Cause	Solution
The user pressed the Scan button while the USB cable was disconnected.	1. Turn off the scanner. 2. Reconnect the USB cable. 3. Turn on the scanner.
The image sensor is not properly calibrated.	1. Turn off the scanner. 2. Turn on the scanner.
There is a jam in the document feeder.	1. Turn off the scanner. 2. Pull forward on the latch to open the document feeder hatch. 3. Clear the jam. 4. Turn on the scanner.
The document feeder hatch is not properly closed.	▲ Press firmly on both sides of the document feeder hatch at the same time to close the hatch.

Scanner installation problems

Review the following information about resolving scanner installation problems.

Check the cables

Table 4-2 Check cable

Cable type	Action
Power cable	The power cable is connected between the scanner and a power outlet. ● Ensure that the power cable is securely connected between the scanner and a live electrical outlet or surge protector. ● If the power cable is connected to a surge protector, ensure that the surge protector is plugged into an outlet and turned on. ● Press the Power button ⏻ to turn off the scanner, and then turn off the computer. After 30 seconds, turn on the scanner and then turn on the computer, in that order.
USB cable	The USB cable is connected between the scanner and the computer. ● Use the cable that was included with the scanner. Another USB cable might not be compatible with the scanner. ● Ensure that the USB cable is securely connected between the scanner and the computer. ● If the USB cable is connected to a USB port on the front of the computer, move it to a USB port on the back of the computer. For additional USB troubleshooting information, visit the product support home page, select your country/region, and then use the search tool to find USB troubleshooting topics. ● 2600 f1 models: www.hp.com/support/sjpro2600f1 ● 3600 f1 models: www.hp.com/support/sjpro3600f1 ● N4600 fnw1 models: www.hp.com/support/sjproN4600fnw1 ● N6600 fnw1 models: www.hp.com/support/sjflowN6600fnw1
Ethernet cable (N4600 fnw1 and N6600 fnw1 models)	Ensure that the Ethernet cable is securely connected between the scanner and your network port. For additional Ethernet troubleshooting information, see www.hp.com/support, select your country/region, and then use the search tool to find Ethernet troubleshooting topics.

Uninstall and then reinstall the HP ScanJet drivers and tools (Windows)

If checking the scanner cable connections did not solve the problem, the problem might have occurred because of an incomplete installation. Try uninstalling and then reinstalling the HP ScanJet drivers and tools.

1. Press the Power ⏻ button to turn off the scanner, and then disconnect the USB cable and power cable from the scanner.
2. On the computer, open Control Panel and use the **Programs and Features** tool to uninstall the following applications:
   - HP ScanJet Basic Device Software

- HP ScanJet ISIS Driver
- HP Scan
- HP ScanJet Plugin

3. Restart the computer.
4. Reinstall the HP ScanJet Drivers and Tools.
   - Turn off the scanner, wait 30 seconds, and then turn on the scanner. The required software and drivers should install automatically.
   - If the drivers and tools do not install automatically, install them manually.
5. Reconnect the USB cable and power cable to the scanner, and then press the Power ⏻ button to turn on the scanner.

Power issues

Review the following information about resolving power issues.

Check that the scanner has power

The power cable is connected between the scanner and a power outlet.

- Ensure that the power cable is securely connected between the scanner and a live electrical outlet.
- If the power cable is connected to a surge protector, ensure that the surge protector is plugged into an outlet and turned on.
- Ensure that the scanner is receiving power.
  - Check that the Power LED on the control panel is on.
  - If the Power LED is not on, ensure that power is available to the power outlet or surge protector that the power supply is plugged into.
  - If power is available to the power outlet or surge protector but the Power LED is still not on, the power supply might be defective. Go to the product support home page for assistance:
    - 2600 f1 models: www.hp.com/support/sjpro2600f1
    - 3600 f1 models: www.hp.com/support/sjpro3600f1
    - N4600 fnw1 models: www.hp.com/support/sjproN4600fnw1
    - N6600 fnw1 models: www.hp.com/support/sjflowN6600fnw1

The scanner will not turn on

If the scanner will not turn on after pressing the Power button ⏻, check the following:

- The scanner might have been unplugged. Check to see that the power supply has not become disconnected from the scanner or unplugged from the power source.
- The power supply might not be working.

- Check that the Power LED on the control panel is on.
- If the Power LED is not on, ensure that power is available to the power outlet or surge protector that the power supply is plugged into.
- If power is available to the power outlet or surge protector but the Power LED is still not on, the power supply might be defective. Go to the product support home page for assistance:
  - 2600 f1 models: www.hp.com/support/sjpro2600f1
  - 3600 f1 models: www.hp.com/support/sjpro3600f1
  - N4600 fnw1 models: www.hp.com/support/sjproN4600fnw1
  - N6600 fnw1 models: www.hp.com/support/sjflowN6600fnw1

The scanner has paused or shut down

If the scanner stops scanning, follow these steps. After each step, start a scan to see if the scanner is working. If the problem persists, proceed with the next step.

1. A cable might be loose. Ensure that both the USB cable and power supply are properly connected.

   Use the cable that was included with the scanner. Another USB cable might not be compatible with the scanner.

2. Ensure that the scanner is receiving power.

   a. Check that the Power LED on the control panel is on.

   b. If the Power LED is not on, ensure that power is available to the power outlet or surge protector that the power supply is plugged into.

   c. If power is available to the power outlet or surge protector but the Power LED is still not on, unplug the power cable from the power source, wait 30 seconds, and then plug it back in.

   d. If the issue is not fixed, the power supply might be defective. Go to the product support home page for assistance:

   - 2600 f1 models: www.hp.com/support/sjpro2600f1
   - 3600 f1 models: www.hp.com/support/sjpro3600f1
   - N4600 fnw1 models: www.hp.com/support/sjproN4600fnw1
   - N6600 fnw1 models: www.hp.com/support/sjflowN6600fnw1

3. Restart your computer.

4. **Windows**: On the computer, open Control Panel and use the **Programs and Features** tool to uninstall the following applications:

   - HP ScanJet Basic Device Software
   - HP ScanJet ISIS Driver
   - HP ScanJet Plugin
   - HP Scan

5. Reconnect the USB cable and power supply to the scanner, and then press the Power button ⏻ to turn on the scanner. Reinstall the HP ScanJet software and drivers.

The scanner keeps turning off

If the scanner keeps turning off, try these steps according to your operating system.

By default, the scanner will enter Sleep Mode prior to 15 minutes of inactivity, and will turn off automatically after two hours of inactivity to conserve power.

Windows: To change the defaults, complete these steps:

1. Launch the HP Scanner Tools Utility.
2. Click the **Settings** tab, and then select the appropriate Sleep Mode and Auto-Off settings.
   - To specify the period of inactivity after which the scanner goes into Sleep Mode, select **15 minutes** or **1 hour** from the **Put the scanner to sleep after** drop-down list.
   - To specify the period of inactivity after which the scanner automatically turns off, select the appropriate value (**1 hour**, **2 hours**, **4 hours**, or **8 hours**) from the **Turn off the scanner after** drop-down list.
3. Click **Apply**.

macOS: Use HP Utility to change these defaults.

Paper jams

Review the following information about clearing paper jams.

NOTE: Scanning damp or wet pages can cause paper jams. Make sure that the pages being fed are completely dry (such as, the toner is dry, or there are no wet substances such as glue or correction fluid on the page).

Clear jams from the document feeder

To clear a paper jam, complete these steps:

1. Remove any pages from the input tray and the output tray.
2. Close the output tray and extension.
3. Pull forward on the latch to open the document feeder hatch.

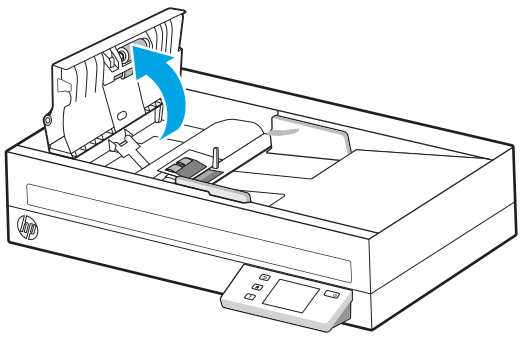

4. Remove the originals or any obstructions from the paper path.
5. Remove any visible debris (for example, paper, staples, or clips) from the paper path.

6. Inspect the rollers in the document feeder hatch, and remove any visible debris.
7. Close the document feeder hatch.
8. Open the output tray to check if there is paper still inside the paper path. If there is still paper in the paper path, carefully pull the paper out.
9. Reload all originals in the input tray and scan again.

An item loaded in the scanner jams repeatedly

Check the following for resolving the issue.

- The item might not meet the guidelines for acceptable originals.
- The item might have something on it, such as staples or self-adhesive notes on the original that must be removed.
- Make sure the paper guides touch the edges of the original.

Paper feed issues

Review the following information about resolving paper feed issues.

Paper jamming, skewing, misfeeds, or multiple-page feeds

Review the following information for resolving the issue.

- Scanning damp or wet pages can cause paper jams. Make sure that the pages you are feeding are completely dry (toner is dry, there are no wet substances such as glue or correction fluid).
- Check that all rollers are in place and that the roller door and document feeder hatch are closed.
- If the pages look skewed as they feed into the scanner paper path, check the resulting scanned images in the software to ensure that they are not skewed.
- The pages might not be placed correctly. Straighten the pages and adjust the paper guides to center the stack.
- The paper guides must be touching the sides of the paper stack to work properly. Please ensure that the paper stack is straight and the guides are against the paper stack.
- The input tray or output tray might contain more than the maximum number of pages. Load fewer pages in the input tray, and remove pages from the output tray.
- Clean the scanner paper path to help reduce misfeeds. If misfeeds still occur, clean the rollers. If misfeeds still occur, replace the rollers.

Paper does not feed from the scanner

If paper does not feed from the scanner, try the following:

Reload the pages into the input tray, ensuring that they make contact with the rollers.

The document feeder hatch might not be securely latched. Open the hatch and then close it, pressing firmly on both sides to ensure the hatch is closed.

A problem with the scanner hardware might exist. Follow this procedure to test the scanner:

1. Ensure that the power supply is securely connected between the scanner and a live electrical outlet or surge protector. Check that the Power LED on the control panel is on to verify that the power supply is functional.
2. If the power supply is connected to a surge protector, ensure that the surge protector is plugged into an outlet and turned on.
3. Press the Power ⏻ button to turn off the scanner, disconnect the power supply from the scanner, and then turn of the computer to which the scanner is connected. Wait 30 seconds, reconnect the power supply to the scanner, press the Power ⏻ button to turn on the scanner, and then turn on the computer.
4. Try to rescan.

Image quality problems

Review the following information about resolving image quality problems.

The scanned images are not straight

Check the following to resolve the issue.

- Verify that the paper guides are centered on the scanner and set to an appropriate width for the original being scanned. Make sure the paper guides touch the edges of the original.
- Windows: Use the Straighten Content feature to straighten content that is skewed relative to the page dimensions in the source document. Use the Detect Size feature to deskew page images that might have become skewed during the scanning process.

The scanned images have streaks or scratches

Try the following to resolve the issue.

- Check that the originals are clean and unwrinkled.
- Clean the scanner strips. See Clean the scanning strips for more information.

The scanned image is fuzzy

Check the following to resolve the issue.

- Check for any obstructions in the scanner paper path and make sure the paper guides are positioned appropriately. Try another scan.
- Verify that the document is not fuzzy.
- Dust can build up on the scanning strips inside the document feeder and cause low-quality scans. Clean the scanning strips with a soft, lint-free cloth that has been sprayed with a mild glass cleaner.

The scanned image is completely black or completely white

Check the following to resolve the issue.

- The item might not be placed correctly in the input tray. Make sure that the item being scanned is placed face down in the input tray.
- Windows: If scanning to a black and white image, make sure neither the black nor the white threshold is set to extreme. Setting the threshold to an extreme will result in an image that is all white or all black.

- macOS: If scanning to a text image using the Image Capture application, set Image Correction to Manual and use the Threshold slider bar to adjust the threshold.

The bottom of the scanned image is cut off

By default, the scanning software can scan media that is up to 356 mm (14 in) long.

Verify that the page size selected in the scanning software (or the scan shortcut selected) will accommodate the length of the document being scanned.

The scanned image cannot be enlarged

The software might be setting the exposure for the entire scan area instead of for one small original. Select and drag the handles around the selection area until you see the image area you want to scan.

Scanner operation problems

Review the following information about resolving scanner operation problems.

Connection issues

Review the following information about resolving connection issues.

Check the USB connection

Follow these steps to check the USB connection.

Check the physical connection to the scanner.

- Use the cable that was included with the scanner. Another USB cable might not be compatible with the scanner.
- Ensure that the USB cable is securely connected between the scanner and the computer. The trident icon on the USB cable faces down when the cable is properly connected to the scanner.

If the problem persists after verifying the above items, try the following:

1. Do one of the following tasks depending on how the scanner is connected to the computer:
   - If the USB cable is connected to a USB hub or a docking station for a laptop, disconnect the USB cable from the USB hub or the docking station, and then connect the USB cable to a USB port on the back of the computer.
   - If the USB cable is directly connected to the computer, plug it into a different USB port on the back of the computer.
   - Remove all other USB devices from the computer except for the keyboard and the mouse.
2. Press the Power button ⏻ to turn off the scanner, wait 30 seconds, and then turn on the scanner.
3. Restart the computer.
4. After the computer has restarted, try using the scanner.
   - If the scanner works, reconnect any additional USB devices one at a time; try the scanner after connecting each additional device. Disconnect any USB devices that prevent the scanner from working.

- Windows: If the scanner does not work, uninstall and then reinstall the HP ScanJet drivers and software.

Check the ethernet connection (N4600 fnw1 and N6600 fnw1 models)

Follow these steps to check the ethernet connection.

1. Ensure that the Ethernet cable is firmly connected between the product and a router, Ethernet jack, or Ethernet switch.
2. If the Ethernet cable is connected to a network router or Ethernet switch, try connecting it to a different port on the router or switch.
3. Press the Power button ⏻ to turn off the scanner, wait 30 seconds, and then turn on the scanner.

Check the wireless connection (N4600 fnw1 and N6600 fnw1 models)

Review the following to check the wireless connection.

- Verify that the network cable is not connected.
- Verify that the scanner and the wireless router are turned on and have power. Also make sure that the wireless radio in the scanner is turned on.
- Verify that the service set identifier (SSID) is correct. If you are not sure the SSID is correct, run the wireless setup again.
- With secured networks, verify that the security information is correct. If the security information is incorrect, run the wireless setup again.
- If the wireless network is working correctly, try accessing other computers on the wireless network. If the network has Internet access, try connecting to the Internet over a wireless connection.
- Verify that the encryption method (AES or TKIP) is the same for the scanner as it is for the wireless access point (on networks using WPA security).
- Verify that the scanner is within the range of the wireless network. For most networks, the scanner must be within 30 m (100 ft) of the wireless access point (wireless router).
- Verify that obstacles do not block the wireless signal. Remove any large metal objects between the access point and the scanner. Make sure poles, walls, or support columns containing metal or concrete do not separate the scanner and wireless access point.
- Verify that the scanner is located away from electronic devices that might interfere with the wireless signal. Many devices can interfere with the wireless signal including motors, cordless phones, security system cameras, other wireless networks, and some Bluetooth devices.
- Verify that the scan driver is installed on the computer.
- Verify that the computer and scanner connect to the same wireless network.
- For macOS, verify that the wireless router supports Bonjour.

Buttons are not working properly

If the buttons are not working properly, complete the following steps.

1. A cable might be loose. Ensure that the USB cable and the power supply are securely connected.
2. Turn off the scanner, wait 30 seconds, and then turn the scanner back on.

3. Restart the computer.
4. If the problem still persists, there might be a problem with the control panel. Contact HP Support at:
   - 2600 f1 models: www.hp.com/support/sjpro2600f1
   - 3600 f1 models: www.hp.com/support/sjpro3600f1
   - N4600 fnw1 models: www.hp.com/support/sjproN4600fnw1
   - N6600 fnw1 models: www.hp.com/support/sjflowN6600fnw1

LCD issues (N4600 fnw1 and N6600 fnw1 models)

Review the following information to resolving LCD issues.

The LCD is having display issues

The following symptoms indicate a problem with the scanner control panel.

- LCD issues: The display is blank, or part of the display content is missing.
- LED issues: LEDs are not working, or are staying in the wrong state.

If the scanner exhibits any of these problems, contact HP support at www.hp.com/support.

The scanner buttons are not working as expected

The following symptoms indicate a problem with the scanner control panel.

- Button issues: Buttons are unresponsive, or the wrong action occurs when you press a button. For example, you get a single-sided scan when you press the Default/Duplex Toggle button to set a two-sided scan.
- LED issues: LEDs are not working, or are staying in the wrong state.

If the scanner exhibits any of these problems, contact HP support at www.hp.com/support.

The touch panel display issues (N4600 fnw1 and N6600 fnw1 models)

The following symptoms indicate a problem with the scanner touch panel.

- Touch panel issues: The display is blank, or part of the display content is missing.
- Button issues: Buttons are unresponsive, or the wrong action occurs when you press a button (for example, you get a single-sided scan when you press the Default/Duplex Toggle button to set a two-sided scan.

If the scanner exhibits any of these problems, contact HP support at www.hp.com/support.

Scanning performance issues

Review the following information about resolving scanning performance issues.

The scanner does not scan immediately

Make sure the document feeder hatch is closed, and that the scanner is turned on.

The scanner is scanning items very slowly

When scanning to edit text, the optical character recognition (OCR) causes the scanner to scan more slowly, which is normal. Wait for the item to scan.

NOTE: **Windows:** For the best OCR results, scanner compression should be set to the minimum compression level or be disabled.

Scanning at a higher resolution than necessary increases scanning time and creates a larger file with no additional benefit. If you are scanning at a high resolution, set the resolution to a lower level to increase scanning speed.

The scanner scans only one side of a two-sided page

Verify that the selected scan shortcut specifies two-sided scanning.

Scanned pages are missing at the scan destination

When scanning, pages that stick together are scanned as one item. Check to confirm that scanned pages are not stuck together.

Scanned pages are out of order at the scan destination

If scanned pages are out of order at the scan destination, check the following.

- Verify that the page order of the original document is correct before placing the document face down into the input tray.
- Make sure that there are no staples, paper clips, or any other attached material (such as adhesive notes) that might cause the pages to feed incorrectly.
- Verify that pages are not stuck together.

Scanned files are too large

If scan files are too large, check the following.

- Most scanning software allows a smaller file size to be selected when selecting the output file type. For more information, see the Help for the scanning software being used.
- Verify the scan resolution setting (for more information, see the Help for the scanning software being using):
  - 200 dpi is sufficient for storing documents as images.
  - For most fonts, 300 dpi is sufficient for using optical character recognition (OCR) to create editable text.
  - For Asian fonts and small fonts, choosing a higher resolution is recommended.

  NOTE: For some special black dot background scans, saving the image as a .tif file might make the image smaller.

  Scanning at a higher resolution than necessary creates a larger file with no additional benefit.
- Color scans create larger files than do black and white scans.
- If scanning a large number of pages at one time, consider scanning fewer pages at a time to create more, smaller files.

Issues with text recognition (OCR) (Windows)

The scanner uses optical character recognition (OCR) to convert text on a page to text that can be edited on a computer.

- If text can be scanned but cannot be edited, make the following selections before scanning:
  - Select a scan shortcut that supports OCR. The following scan shortcuts support OCR:
    - **Save as PDF**
    - **Email as PDF**
    - **Save as Editable Text (OCR)**
    - **Send to Cloud**
    - **Everyday Scan**
  - Select one of the following OCR-based, output-file types from the **File Type** drop-down box:
    - Text (.txt)
    - Rich Text (.rtf)
    - Word (.doc, .docx)
    - Excel (.xls, .xlsx)
    - CSV (.csv)
    - XML (.xml)
    - Searchable PDF (.pdf)
    - PDF/A (.pdf)

NOTE: If an OCR-based, output-file type is not selected, the document is scanned as a graphic and the text is not editable.

- Check the originals
  - The software might not recognize text that is tightly spaced. For example, if the text that the software converts has missing or combined characters, "rn" might appear as "m".
  - The accuracy of the software depends on the image quality, text size, and structure of the original and the quality of the scan itself. Make sure that the original has good image quality.
  - Colored backgrounds can cause images in the foreground to blend too much.
- If the scanner strips are dirty, the scan file does not have optimum clarity. Make sure the scanner strips are clean.

Email problems (N4600 fnw1 and N6600 fnw1 models)

To resolve email problems, try the following.

Validate the SMTP gateway address

Open the Embedded Web Server to confirm that the SMTP gateway address is correct. Also confirm that the email address being used is valid.

Validate the LDAP gateway (Windows)

Use the following procedure to validate the LDAP gateway in Windows.

1. Open Windows Explorer. In the address bar, type `LDAP://` immediately followed by the LDAP gateway address. For example, type `LDAP://12.12.12.12` where "12.12.12.12" represents the LDAP gateway address.
2. Press the Enter key. If the LDAP gateway address is valid, the **Find People** dialog box opens.
3. If the LDAP gateway address is not valid, contact the network administrator.

5 Additional troubleshooting

Table 5-1 Additional troubleshooting support

Support	Where to get
Get telephone support for your country/region Have the product name, serial number, date of purchase, and problem description ready.	Country/region phone numbers are on the flyer that was in the box with the product or at www.hp.com/support.
Get 24-hour Internet support, and download software utilities, drivers, and electronic information	Product support home page: • 2600 f1 models: www.hp.com/support/sjpro2600f1 • 3600 f1 models: www.hp.com/support/sjpro3600f1 • N4600 fnw1 models: www.hp.com/support/sjproN4600fnw1 • N6600 fnw1 models: www.hp.com/support/sjflowN6600fnw1
Order additional HP service or maintenance agreements	www.hp.com/support

Index

A

acoustic specifications 1, 7, 9
Auto color detect 14, 31
automatically crop or pad scanned image to selected page size 14, 31
automatically detect page size 14, 31, 35

B

black scans
  troubleshoot 47, 54
blurry images 47, 54
buttons
  Cancel 1, 5
  Duplex Scan 5
  Power 1, 5
  Scan 1
  scanner control panel 1, 5
  scanner touch panel 5
  Simplex Scan 5

C

cables
  troubleshoot 47, 49
Cancel button 1, 5
clean
  paper path 40
  rollers 40
cleaning cloth 40
cloud, scan to 14, 31
control panel 1
  buttons 5
  See control panel
  locating 1, 2
crooked images 47, 54
crop or pad scanned image to selected page size 14, 31
customer support
  online 47, 61
cut-off images
  troubleshoot 47, 54, 55

D

detect multi-feeds 14, 31, 33
detect page size 14, 31, 35
display problems 57
drivers
  paper sizes 14, 24, 25
Duplex Scan button 5

E

electrical specifications 1, 7, 9
extra-long-page support 14, 31, 33

F

features
  auto color detect 14, 31
  crop or pad scanned image to selected page size 14, 31
  detect page size 14, 31, 35
  extra-long-page support 14, 31, 33
  long-page support 14, 31, 33
  multi-feed detection 14, 31, 33
  scan shortcuts 31
feeding problems 47, 52
fragile items, scanning 14, 38
fuzzy images 47, 54

H

HP Customer Care 47, 61
HP paper path cleaning cloth 40
HP Scan Extended software
  about 1, 10
HP Scanner Tools Utility
  uses for 1, 10, 11
HP TWAIN 1, 10, 11
HP Utility 14, 37, 38
HP Utility for Mac
  Bonjour 14, 37, 38
  features 14, 37, 38
HP Utility, Mac 14, 37, 38
HP Web Jetadmin 12

I

input and output trays
  locating 1
input tray
  load cards 14, 24
  load documents 14, 24
  locating 2
  tips on loading 14, 24
install software
  troubleshoot 47, 49
ISIS 1, 10, 11

J

jams
  troubleshoot 47, 52, 53
Jetadmin, HP Web 12

L

LCD problems 57
LED
  error 47, 48
long-page support 14, 31, 33

M

Macintosh
  HP Utility 14, 37, 38
macOS software 1, 11
maintenance
  clean paper path 40
  clean rollers 40
manage power settings 47, 50
media
  jams 47, 52, 53
  misfeeds 47, 53
  not feeding 47, 53
  troubleshoot 47, 53
memory
  included 1, 7
minimum system requirements 8
misfeeds
  troubleshoot 47, 53
multi-feed detection 14, 31, 33
multiple-page feeds 47, 53

N

networks
  HP Web Jetadmin 12
  supported 1, 7

O

on/off button, locating 1, 2
online support 47, 61
operating systems (OS)
  supported 1, 7

operating systems, supported 8
order
roller replacement kit 40, 42, 45
supplies 40, 45
OS (operating system)
supported 1, 7
output tray
locating 1, 2

P

pages missing, troubleshoot 47, 55, 57, 58
pages out of order 47, 55, 57, 58
pages per minute 1, 7
paper
jams 47, 52, 53
misfeeds 47, 53
not feeding 47, 53
supported sizes 14, 24, 25
troubleshoot 47, 53
paper guides, locating 1, 2
paper path
clean 40
feeding problems 47, 52
parts
order 40, 42, 45
power
consumption 1, 7, 9
Power button 1, 5
power button, locating 1, 2
Power LED 1, 5
power management 47, 50
power supply
troubleshoot cable 47, 49
problems with LCD 57
problems with touch panel 57
product
auto-off 1, 12
Sleep Mode 1, 12
product info 1

R

replace pad 42
replace pickup roller module 45
replace rollers 40, 42
roller kit
replace 40, 42, 45
rollers
clean 40
replace 40, 42, 45

S

scan
cards 14, 24
feeding problems 47, 52
files too large 47, 55, 57, 58
fragile items 14, 38
originals 14, 24
Scan 29
Scan button 1
scan shortcuts 31
scan to cloud 14, 31
Scan to Email
configuration 14
Scan to Network Folder
initial setup 14, 17
Scan to SharePoint
enabling 14
Scan to USB Drive
enabling 14, 19
scanner
control panel 1
touch panel 5
scanner software
Mac 1, 11
Windows 1, 10
Simplex Scan button 5
skewed images 47, 54
Sleep Mode 1, 12
software
HP Utility 14, 37, 38
Mac 1, 11
troubleshoot installation 47, 49
uninstall and reinstall 47, 49, 50
Windows 1, 10
specifications
electrical and acoustic 1, 7, 9
speed
troubleshoot 47, 55, 57
speed, troubleshoot 14, 38
status
HP Utility, Mac 14, 37, 38
streaks
troubleshoot 47, 54
supplies
order 40, 45
status, viewing with HP Utility for Mac 14, 37, 38
support
online 47, 61
supported operating systems 8
system requirements
minimum 8

T

technical support
online 47, 61
touch panel problems 57
trays
capacity 1, 7
included 1, 7
troubleshoot
basic tips 47
black scans 47, 54
cables 47, 49
check power 47, 50
crooked images 47, 54
cut-off images 47, 54, 55
feeding problems 47, 52
fragile items 14, 38
fuzzy images 47, 54
installation 47, 49
jams 47, 52, 53
large scan files 47, 55, 57, 58
misfeeds 47, 53
page order 47, 55, 57, 58
pages missing 47, 55, 57, 58
paper not feeding 47, 53
power 47, 50
scanning fragile items 14, 38
speed 14, 38, 47, 55, 57
stops working 47, 50
streaks 47, 54
two-sided scans 47, 55, 57, 58
uninstall and reinstall software 47, 49, 50
white scans 47, 54
wireless connection 56
troubleshooting
buttons 57
display 57
LCD 57
touch panel 57
turn on scanner
troubleshoot 47, 50
TWAIN 1, 10, 11
two-sided scans
troubleshoot 47, 55, 57, 58

U

uninstall and reinstall software 47, 49, 50
USB cable
troubleshoot 47, 49

W

Web sites
HP Web Jetadmin, downloading 12
websites
customer support 47, 61
order supplies 40, 45
replacement parts 40, 42
white scans
troubleshoot 47, 54
Windows software 1, 10
wireless connection issues 56