HP LaserJet Pro MFP 4101
HP LaserJet Pro MFP 4102

User Guide

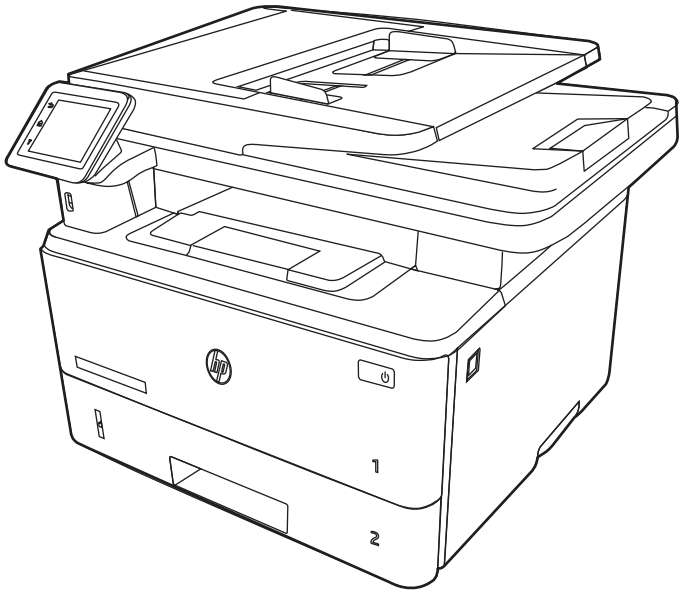

www.hp.com/support/ljmfp4101-4104

HP LaserJet Pro MFP 4101, 4102 - User Guide

SUMMARY

This guide provides configuration, use, warranty, safety and environmental information.

Legal information

Copyright and License

© Copyright 2022 HP Development Company, L.P.

Reproduction, adaptation, or translation without prior written permission is prohibited, except as allowed under the copyright laws.

The information contained herein is subject to change without notice.

The only warranties for HP products and services are set forth in the express warranty statements accompanying such products and services. Nothing herein should be construed as constituting an additional warranty. HP shall not be liable for technical or editorial errors or omissions contained herein.

Edition 1, 04/2022

Trademark Credits

Adobe®, Adobe Photoshop®, Acrobat®, and PostScript® are trademarks of Adobe Systems Incorporated.

Apple and the Apple logo are trademarks of Apple Inc., registered in the U.S. and other countries.

macOS is a trademark of Apple Inc., registered in the U.S. and other countries.

AirPrint is a trademark of Apple Inc., registered in the U.S. and other countries.

Google™ is a trademark of Google Inc.

Microsoft®, Windows®, and Windows Server® are U.S. registered trademarks of Microsoft Corporation.

UNIX® is a registered trademark of The Open Group.

Table of contents

1 Printer overview 1

Warning icons 1

Potential shock hazard 2

Open source license 2

Printer views 2

Printer front view 2

Printer back view 3

Control panel view 4

Printer specifications 7

Technical specifications 7

Supported operating systems 9

Mobile printing solutions 10

Printer dimensions 11

Power consumption 13

Electrical specifications 13

Acoustic emissions 13

Operating-environment range 14

Printer hardware setup and software installation 14

2 Paper trays 15

Load paper to Tray 1 (multipurpose tray) 15

Load Paper Tray 1 15

Tray 1 paper orientation 18

Load paper to Tray 2 19

Load Paper Tray 2 19

Tray 2 paper orientation 21

Load paper to Tray 3 (optional accessory) 22

Load paper Tray 3 22

Tray 3 paper orientation 24

Load and print envelopes 25

Introduction 25

Print envelopes 26

Envelope orientation 26

3 Supplies, accessories, and parts 27

Dynamic Security Enabled Printers 27

Order supplies, accessories, and parts 27

Ordering 27

Supplies and accessories 28

Customer self-repair parts 28

Configure the HP toner-cartridge-protection supply settings 29
Introduction 29
Enable or disable the Cartridge Policy feature 30
Enable or disable the Cartridge Protection feature 31
Replace the toner cartridge 33
Toner cartridge information 33
Remove and replace the cartridge 35
4 Print 39
Print tasks (Windows) 39
How to print (Windows) 39
Automatically print on both sides (Windows) 40
Manually print on both sides (Windows) 40
Print multiple pages per sheet (Windows) 40
Select the paper type (Windows) 41
Additional print tasks 41
Print tasks (macOS) 42
How to print (macOS) 42
Automatically print on both sides (macOS) 42
Manually print on both sides (macOS) 42
Print multiple pages per sheet (macOS) 43
Select the paper type (macOS) 43
Additional print tasks 44
Store print jobs on the printer to print later or print privately 44
Introduction 44
Before beginning 44
Set up job storage 45
Disable or enable the job storage feature 46
Create a stored job (Windows) 46
Create a stored job (macOS) 47
Print a stored job 48
Delete a stored job 48
Information sent to printer for Job Accounting purposes 49
Mobile printing 49
Introduction 49
Wi-Fi Direct printing (wireless models only) 49
HP ePrint via Email 50
AirPrint 51
Android embedded printing 51
Print from a USB flash drive 51
Introduction 52
Print USB documents 52
5 Copy 53
Make a copy 53
Copy on both sides (duplex) 53
Copy on both sides automatically 54

Copy on both sides manually 54
Copy an identification card 54
Additional copy tasks 55
6 Scan 56
Scan by using HP Scan software (Windows) 56
Scan by using HP Easy Scan Software (macOS) 56
Set up Scan to Email 57
Introduction 57
Before you begin 57
Method one: Use the Scan to Email Wizard (Windows) 57
Method two: Set up the Scan to Email feature via the HP Embedded Web Server 59
Set up Scan to Network Folder 60
Introduction 60
Before you begin 60
Method one: Use the Scan to Network Folder Wizard (Windows) 60
Method two: Set up the Scan to Network Folder feature via the HP Embedded Web Server 62
Set up Scan to SharePoint 63
Step one: Access the HP Embedded Web Server (EWS) 63
Step two: Set up Scan to SharePoint 63
Set up Scan to Computer (Windows) 63
Enable scanning to a computer (Windows) 64
Scan to a USB flash drive 64
Scan to email 65
Scan to a network folder 65
Scan to SharePoint 66
Scan to a computer (Windows) 66
Additional scan tasks 67
7 Fax 68
Connect and configure the printer for fax 68
Connect the printer to a telephone line 68
Configure the printer for fax 69
Send a fax 72
Send a fax by dialing manually from the printer control panel 72
Fax from the flatbed scanner 73
Fax from the document feeder 73
Schedule a fax to be sent later 74
Use phone book entries 75
Send a fax from the software (Windows) 75
Send a fax from a third-party software program, such as Microsoft Word 76
Create, edit, and delete phone book entries 76
Create and edit individual phone-book entries 76
Create and edit group phone-book entries 76

Delete phone book entries 77
Reprint a received fax from the printer memory 77
Additional fax tasks 77
8 Manage the printer 79
Use HP Web Services applications 79
Change the printer connection type (Windows) 79
Advanced configuration with HP Embedded Web Server and Printer Home Page (EWS) 80
Method one: Open the HP Embedded Web Server (EWS) from the software 80
Method two: Open the HP Embedded Web Server (EWS) from a web browser 80
Configure IP network settings 82
Introduction 82
Printer sharing disclaimer 82
View or change network settings 83
Rename the printer on a network 83
Manually configure IPv4 TCP/IP parameters from the control panel 83
Link speed and duplex settings 84
Printer security features 85
Introduction 85
Assign or change the system password using the Embedded Web Server 85
Energy-conservation settings 85
Introduction 85
Print with EconoMode 86
Set the Sleep Mode setting 86
Set the Shutdown Mode setting 86
Set the Disable Shutdown setting 87
HP Web Jetadmin 87
Dynamic Security Enabled Printers 87
Update the firmware 88
Method one: Update the firmware using the control panel 88
Method two: Update the firmware using the HP Printer Update utility 88
9 Solve problems 90
Customer support 90
Control panel help system 90
Restore the factory-set defaults 91
A “Cartridge is low” or “Cartridge is very low” message displays on the printer control panel 91
Change the “Very Low” settings 92
Order supplies 93
Printer does not pick up paper or misfeeds 93
Introduction 93
The printer picks up multiple sheets of paper 93
The printer does not pick up paper 95
The document feeder jams, skews, or picks up multiple sheets of paper 97

Clear paper jams....98
Experiencing frequent or recurring paper jams?....98
Paper jam locations....99
31.13 jam error in the document feeder....100
13.02 jam error tray 1....103
13.03 jam error tray 2....108
13.04 jam error tray 3....114
13.08, 13.09 jam error in the toner cartridge or fuser area....119
13.10, 13.11, 13.13 jam error in the output bin....123
13.14, 13.15 jam error in the duplexer....127

Resolving print quality problems....130
Introduction....130
Troubleshoot print quality....131
Troubleshoot image defects....136

Improve copy and scan image quality....144
Introduction....144
Check the scanner glass for dirt and smudges....144
Check the paper settings....145
Check the image adjustment settings....145
Optimize for text or pictures....145
Check the scanner resolution and color settings on the computer....146
Edge-to-edge copying....147
Clean the pickup rollers and separation pad in the document feeder....147

Improve fax image quality....149
Introduction....149
Check the scanner glass for dirt and smudges....149
Check the send-fax resolution settings....149
Check the Error Correction Mode setting....150
Send to a different fax machine....150
Check the sender's fax machine....150

Solve wired network problems....150
Introduction....150
Poor physical connection....150
The computer is using the incorrect IP address for the printer....151
The computer is unable to communicate with the printer....151
The printer is using incorrect link and duplex settings for the network....151
New software programs might be causing compatibility problems....152
The computer or workstation might be set up incorrectly....152
The printer is disabled, or other network settings are incorrect....152

Solve wireless network problems....152
Introduction....152
Wireless connectivity checklist....152
The printer does not print after the wireless configuration completes....153
The printer does not print, and the computer has a third-party firewall installed....153
The wireless connection does not work after moving the wireless router or printer....153
Cannot connect more computers to the wireless printer....153
The wireless printer loses communication when connected to a VPN....154

The network does not appear in the wireless networks list 154
The wireless network is not functioning 154
Perform a wireless network diagnostic test 154
Reduce interference on a wireless network 155
Solve fax problems 155
Introduction 155
Fax troubleshooting checklist 155
Solve general fax problems 156
Appendix A Service and support 159
HP limited warranty statement 159
UK, Ireland, and Malta 160
Austria, Belgium, Germany, and Luxemburg 161
Belgium, France, and Luxemburg 161
Italy 162
Spain 163
Denmark 163
Norway 163
Sweden 164
Portugal 164
Greece and Cyprus 164
Hungary 165
Czech Republic 165
Slovakia 165
Poland 166
Bulgaria 166
Romania 166
Belgium and the Netherlands 167
Finland 167
Slovenia 167
Croatia 168
Latvia 168
Lithuania 168
Estonia 168
Russia 169
HP's Premium Protection Warranty: LaserJet toner cartridge limited warranty statement 169
Long life consumable and maintenance kit limited warranty statement 169
Dynamic Security Enabled Printers 170
HP policy on non-HP supplies 170
HP anticounterfeit Web site 170
Data stored on the toner cartridge 171
End User License Agreement 171
Customer self-repair warranty service 175
Customer support 176
Appendix B Environmental product stewardship program 177

Protecting the environment 177
Ozone production 177
Power consumption 177
Toner consumption 177
Paper use 178
Plastics 178
HP LaserJet print supplies 178
Paper 178
Material restrictions 178
Battery information 178
Disposal of waste equipment by users (EU, UK, and India) 179
Electronic hardware recycling 179
Brazil hardware recycling information 179
WEEE (Turkey) 180
Chemical substances 180
Product Power Data per European Union Commission Regulation 1275/2008 and the UK Relevant Statutory Requirements 180
SEPA Ecolabel User Information (China) 180
The regulation of the implementation on China energy label for printer, fax, and copier 180
Restriction on Hazardous Substances statement (India) 181
Substances Table (China) 182
Material Safety Data Sheet (MSDS) 182
EPEAT 183
Substances Table (Taiwan) 184
For more information 185

Appendix C Regulatory information 186

Regulatory statements 186
- Regulatory model identification numbers 186
- European Union & United Kingdom Regulatory Notice 186
- FCC regulations 187
- Canada - Industry Canada ICES-003 Compliance Statement 187
- VCCI statement (Japan) 187
- Power cord instructions 187
- Power cord statement (Japan) 188
- Laser safety 188
- Laser statement for Finland 188
- Nordic Statements (Denmark, Finland, Norway, Sweden) 189
- GS statement (Germany) 189
- Eurasian Conformity (Armenia, Belarus, Kazakhstan, Kyrgyzstan, Russia) 190
- Taiwan BSMI USB Port (Walk-up) statement 190
- Product stability 190

Telecom (fax) statements 191
Fax Cord Statement 191
Europe Statement for Telecom Operation 191
New Zealand Telecom Statements 191
Additional FCC statement for telecom products (US) 191
Telephone Consumer Protection Act (US) 192
Industry Canada CS-03 requirements 192
Japan Telecom Mark 193
Belarus 194
Wireless statements 194
European regulatory notice 194
FCC compliance statement—United States 194
Australia statement 194
Brazil: (Portuguese) 195
Canadian statements 195
Products with 5 GHz Operation Industry of Canada 195
Exposure to Radio Frequency Radiation (Canada) 195
European Regulatory Notice 195
China CMIIT Wireless Statement 196
Notice for use in Japan 196
Notice for use in Russia 196
Mexico statement 196
Taiwan statement 196
Taiwan NCC statement 196
Korean statement 196
Thailand Wireless Statement 196
RFID/NFC Statement 197
China Short Range Device Statement 197
Index 198

1 Printer overview

Review the location of features on the printer, the physical and technical specifications of the printer, and where to locate setup information.

The following information is correct at the time of publication. For current information, see www.hp.com/support/ljmfp4101-4104

For more information:

HP's all-inclusive help for the printer includes the following information:

- Install and configure
- Learn and use
- Solve problems
- Download software and firmware updates
- Join support forums
- Find warranty and regulatory information

Warning icons

Use caution if you see a warning icon on your HP printer, as indicated in the icon definitions.

Figure 1-1 Caution: Electric shock

Figure 1-2 Caution: Hot surface

Figure 1-3 Caution: Keep body parts away from moving parts

Figure 1-4 Caution: Sharp edge in close proximity

Figure 1-5 Warning

Potential shock hazard

Review this important safety information.

- Read and understand these safety statements to avoid an electrical shock hazard.
- Always follow basic safety precautions when using this product to reduce risk of injury from fire or electric shock.
- Read and understand all instructions in the user guide.
- Observe all warnings and instructions marked on the product.
- Use only a grounded electrical outlet when connecting the product to a power source. If you do not know whether the outlet is grounded, check with a qualified electrician.
- Do not touch the contacts on any of the sockets on the product. Replace damaged cords immediately.
- Unplug this product from wall outlets before cleaning.
- Do not install or use this product near water or when you are wet.
- Install the product securely on a stable surface.
- Install the product in a protected location where no one can step on or trip over the power cord.

Open source license

Some HP products use open source software.

For information on open source software used in this printer, visit www.hp.com/software/opensource.

Printer views

Identify certain parts of the printer and the control panel.

Printer front view

Identify the parts on the front of the printer.

Figure 1-6 **Printer front view**

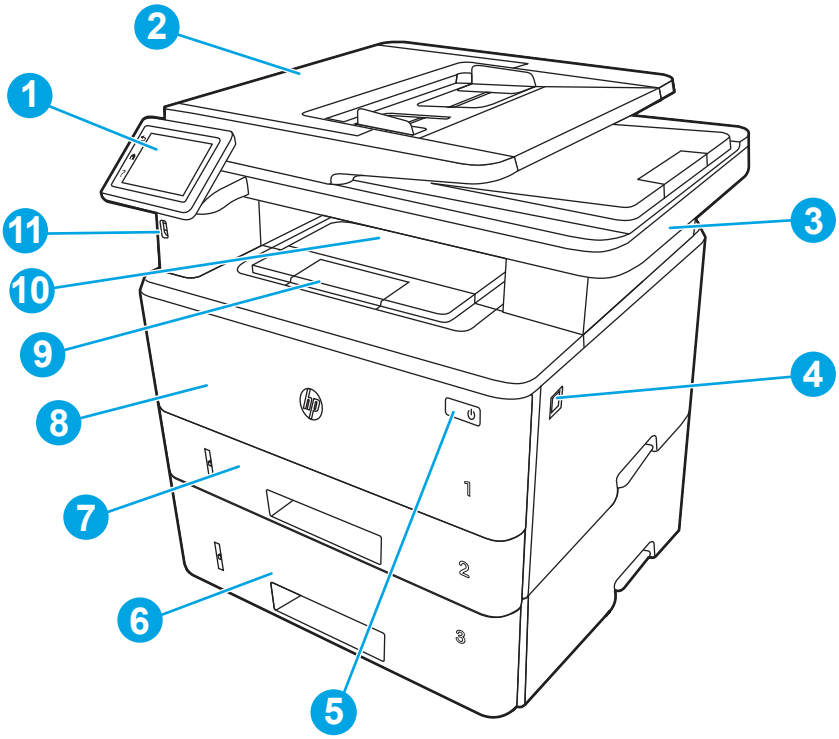

Number	Description
1	Control panel (tilts up for easier viewing)
2	Document feeder
3	Scanner
4	Front door release button (access to the toner cartridge)
5	Power on/off button
6	Tray 3 (optional)
7	Tray 2
8	Tray 1/Front door (access to the toner cartridge)
9	Output bin extension
10	Output bin
11	Walk-up USB port (for printing and scanning without a computer)

Printer back view

Identify the parts on the back of the printer.

Figure 1-7 Printer rear view

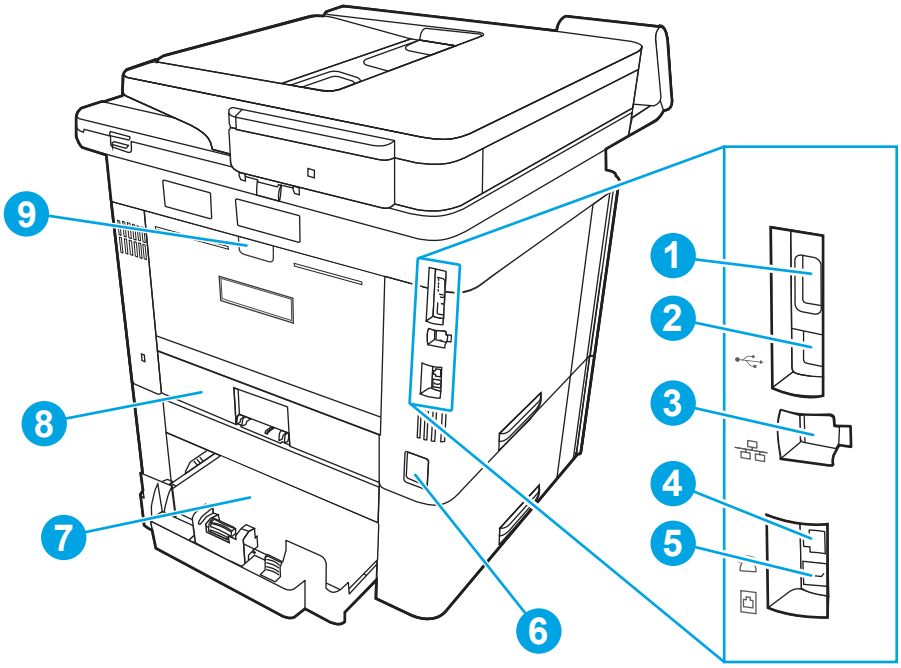

Number	Description
1	USB port (for job storage and private printing) NOTE: This port should remain covered when not in use.
2	USB interface port
3	Ethernet port
4	Telephone "line out" port (for attaching an extension phone, answering machine, or other device) NOTE: This port should remain covered when not in use.
5	Fax "line in" port (for attaching the fax phone line to the printer)
6	Power connection
7	Tray 3 (optional) NOTE: Tray 3 extends when legal-size or A4-size paper is loaded.
8	Dust cover for Tray 2 NOTE: Dust cover flips up when legal-size or A4-size paper is loaded.
9	Rear door (provides access for clearing jams)

Control panel view

Identify the buttons and features on the touchscreen control panel.

The Home screen provides access to the printer features and indicates the current status of the printer.

Return to the Home screen at any time by touching the Home button on the left side of the printer control panel, or touch the Home button in the upper-left corner of most screens.

NOTE: For more information about the printer control panel features, go to www.hp.com/support/ljmfp4101-4104.

NOTE: The features that appear on the Home screen can vary, depending on the printer configuration.

Figure 1-8 Control panel view

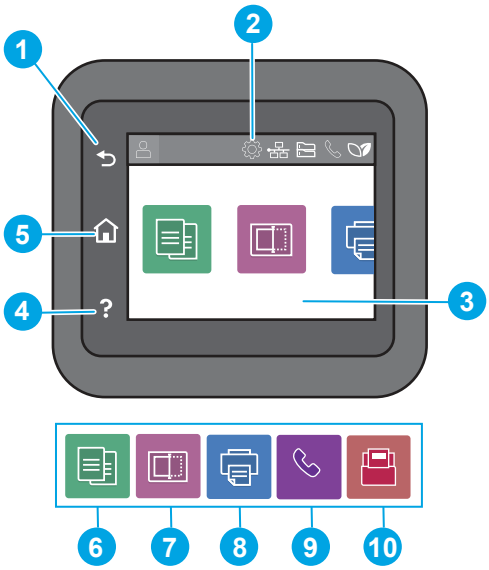

Table 1-1 Control panel features

Number	Item	Description
1	Back button	Returns to the previous screen.
2	Home screen dashboard display icons	See the table that follows for a description of the icons. Pull down this tab to open the Jobs menu.
3	Color touchscreen	Provides access to menus, help animations, and printer information.
4	Help button	Provides access to the control panel help system.
5	Home button	Provides access to the Home screen.
6		Copy icon: Touch this icon to open the Copy menu.
7		Scan icon: Touch this icon to open the Scan menus: • Scan to USB Drive • Scan to Network Folder • Scan to E-mail • Scan to Computer • Scan to SharePoint
8		Print icon: Touch this icon to open the Print menu.

Table 1-1 Control panel features (continued)

Number	Item	Description
9		Fax icon (fax models only): Touch this icon to open the Fax menu.
10		Apps icon: Touch this icon to open the Apps menu to print directly from select Web applications.

NOTE: While the control panel does not have a standard Cancel button, during many printer processes a Cancel button appears on the touchscreen. This permits users to cancel a process before the printer completes it.

Home screen dashboard display icons

Table 1-2 Home screen icons

Icon	Purpose
	Sign-in icon.
	Setup icon: Opens the Setup menu, where you can change preferences and perform maintenance functions.
	Wireless icon (wireless models only): Opens the Wireless Summary menu, where you can check wireless status and change wireless settings. You can also print a wireless test report, which helps diagnosing network connection issues.
	HP ePrint icon: Opens the Web Services Summary menu, where you can check ePrint status details, change ePrint settings, or print an Info page.
	Wi-Fi Direct icon (wireless models only): Opens the Wi-Fi Direct menu, where you can turn on Wi-Fi Direct, turn off Wi-Fi Direct, and display the Wi-Fi Direct name and password.
	Cartridge icon: Opens the Cartridge Information screen, where you can view the estimated level and pages remaining for the toner cartridge.
	Paper Setup icon: Opens the Paper Setup menu, where you can configure the default Paper Size and Paper Type for the paper trays.
	Fax Status icon (fax models only): Displays status information for the Auto Answer function, fax logs, and the fax sound volume.
	ECO icon: Allows you to configure some of the printer environmental features.

How to use the touchscreen control panel

Use the following actions to use the printer touchscreen control panel.

Table 1-3 How to use the touchscreen control panel

Action	Description	Example
Touch 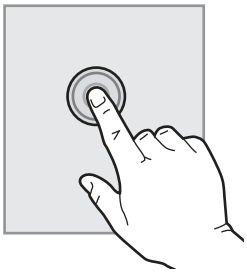	Touch an item on the screen to select that item or open that menu. Also, when scrolling through menus, briefly touch the screen to stop the scrolling.	Touch the Setup icon to open the Setup menu.
Swipe 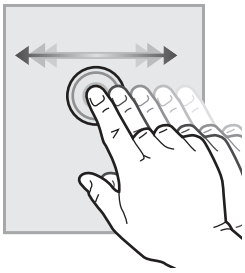	Touch the screen and then move your finger horizontally to scroll the screen sideways.	Swipe the Home screen to access additional menu options.
Scroll 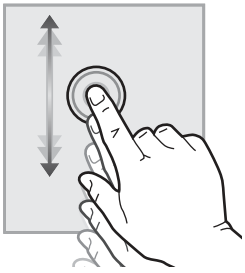	Touch the screen and then move your finger vertically to scroll the screen up and down. When scrolling through menus, briefly touch the screen to stop the scrolling.	Scroll through the Setup menu.

Printer specifications

Determine the specifications for your printer model.

Technical specifications

Review the technical specifications for the printer.

Product numbers for each model

- 4101dw - 2Z620F
- 4101fdn - 2Z618F
- 4101fdw - 2Z619F

- 4102dw - 2Z622F
- 4102fdn - 2Z623F
- 4102fdw - 2Z624F

Table 1-4 Paper handling specifications

Paper handling features	4101dw 4102dw	4101fdn 4102fdn	4101fdw 4102fdw
Tray 1 (100-sheet capacity)	✓	✓	✓
Tray 2 (250-sheet capacity)	✓	✓	✓
Optional 550-sheet accessory tray	Optional	Optional	Optional
Automatic duplex printing	✓	✓	✓

Table 1-5 Connectivity specifications

Connectivity features	4101dw 4102dw	4101fdn 4102fdn	4101fdw 4102fdw
10/100/1000 Ethernet LAN connection with IPv4 and IPv6	✓	✓	✓
Hi-Speed USB 2.0	✓	✓	✓
Walk-up USB port	✓	✓	✓
Print server for wireless connectivity	✓	Not available	✓
Bluetooth Low Energy (BLE)	✓	Not available	✓
Wi-Fi Direct for printing from mobile devices	✓	Not available	✓

Table 1-6 Print specifications

Print features	4101dw 4102dw	4101fdn 4102fdn	4101fdw 4102fdw
Prints 40 pages per minute (ppm) on A4 and 42 ppm on letter-size paper	✓	✓	✓
Job storage and private printing	✓	✓	✓

Table 1-7 Copy and scan specifications

Copy and scan features	4101dw 4102dw	4101fdn 4102fdn	4101fdw 4102fdw
Copies and scans up to 32 pages per minute (ppm)	✓	✓	✓
50-page document feeder with dual-head scanning for single-pass duplex copying and scanning	Not available	✓	✓
50-page document feeder with simplex copying and scanning	✓	Not available	Not available
Scan to E-mail, Scan to USB, and Scan to Network Folder options	✓	✓	✓

Table 1-8 Other specifications

Other features	4101dw 4102dw	4101fdn 4102fdn	4101fdw 4102fdw
Color touchscreen control panel	✓	✓	✓
512MB standard/maximum memory	✓	✓	✓
Fax features	Not available	✓	✓

Supported operating systems

The following information applies to the printer-specific Windows and HP print drivers for macOS and to the software installer.

Windows and macOS: Windows and Mac computers and Android and Apple mobile devices are supported with this printer.

1. Go to support.hp.com.
2. Enter the printer name to get the printer drivers, create an HP account, register the printer, and connect.

Linux: For information and print drivers for Linux, go to developers.hp.com/hp-linux-imaging-and-printing.

UNIX: For information and print drivers for UNIX, go to www.hp.com/go/unixmodelscripts.

Citrix Ready Kit Certification - Up to Citrix Server 7.18: For more information, go to citrixready.citrix.com

Table 1-9 Supported operating systems and print drivers

Operating system	Print driver installed (from the software on the web)
Windows 7 (Service Pack 1), 32-bit and 64-bit	The HP PCL 6 printer-specific print driver is installed for this operating system as part of the software installation.

Table 1-9 Supported operating systems and print drivers (continued)

Operating system	Print driver installed (from the software on the web)
Windows 10, 32-bit and 64-bit	The HP PCL-6 printer-specific print driver is installed for this operating system as part of the software installation.
Citrix Server 6.5	The HP PCL 6 printer-specific print driver is available for download from the printer support website. Download the driver, and then use the Microsoft Add Printer tool to install it.
Citrix XenApp & XenDesktop 7.6	The HP PCL 6 printer-specific print driver is available for download from the printer support website. Download the driver, and then use the Microsoft Add Printer tool to install it.
Novell iPrint server	The HP PCL 6 printer-specific print driver is available for download from the printer support website. Download the driver, and then use the Microsoft Add Printer tool to install it.
macOS Mojave v10.14, macOS Catalina v10.15, macOS Big Sur v11	To install the print driver, download the software from 123.hp.com. Follow the steps provided to install the printer software and print driver.

NOTE: For a current list of supported operating systems, go to www.hp.com/support/ljmfp4101-4104 for HP's all-inclusive help for the printer.

NOTE: For details on client and server operating systems and for HP Smart UPD driver support for this printer, go to support.hp.com.

Table 1-10 Minimum system requirements

Windows 10, Windows 7 (Service Pack 1)	macOS Mojave v10.14, macOS Catalina v10.15, macOS Big Sur v11	Mobile devices, iOS, Android
• 32-bit or 64-bit • 2 GB hard drive • Internet connection • USB port	• 2 GB hard drive • Internet connection	Router connection not required www.hp.com/go/mobileprinting

Mobile printing solutions

HP offers multiple mobile printing solutions to enable easy printing to an HP printer from a laptop, tablet, smartphone, or other mobile device.

To see the full list and to determine the best choice, go to www.hp.com/go/MobilePrinting.

NOTE: Update the printer firmware to ensure all mobile printing capabilities are supported.

- Wi-Fi Direct on wireless models
- AirPrint
- Android Printing
- HP Smart app

Printer dimensions

Make sure your printer environment is large enough to accommodate the printer.

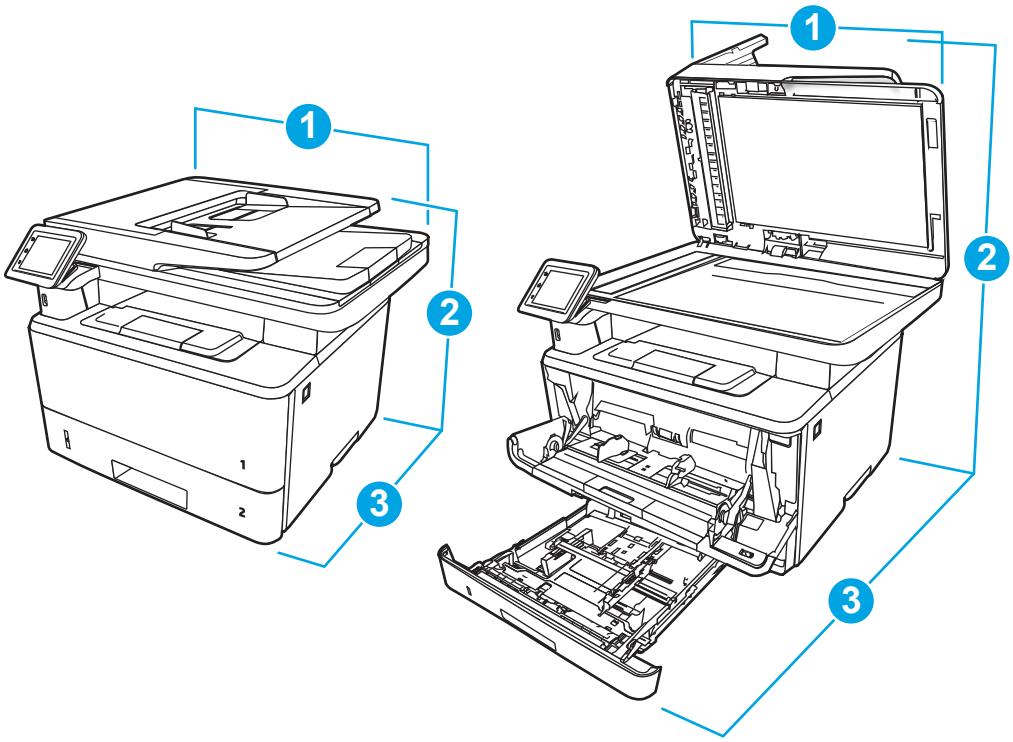

Table 1-11 **Dimensions for the printer**

Measurement	Printer fully closed	Printer fully opened
1. Height	323 mm (12.7 in)	577 mm (22.7 in)
2. Depth	390 mm (15.3 in)	839 mm (33 in)
3. Width	420 mm (16.5 in)	453 mm (17.8 in)
Weight (with cartridges)	12.9 kg (28.4 lb)	12.9 kg (28.4 lb)

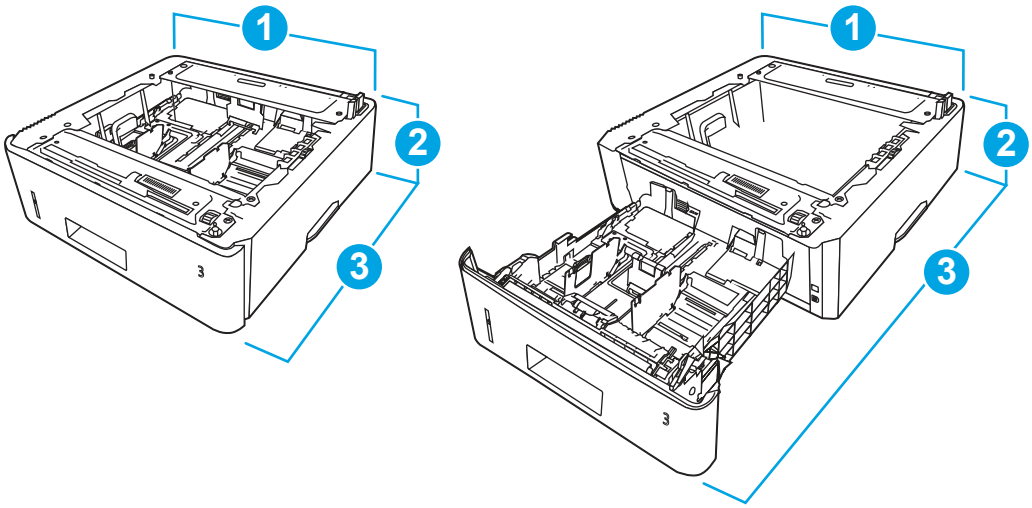

Table 1-12 Dimensions for the optional 550-sheet tray

Measurement	Tray fully closed	Tray fully open
1. Height	131 mm (5.1 in)	131 mm (5.1 in)
2. Depth	357 mm (14 in)	781 mm (30.8 in)
3. Width	381 mm (15 in)	381 mm (15 in)
Weight	3.7 kg (8.2 lb)	3.7 kg (8.2 lb)

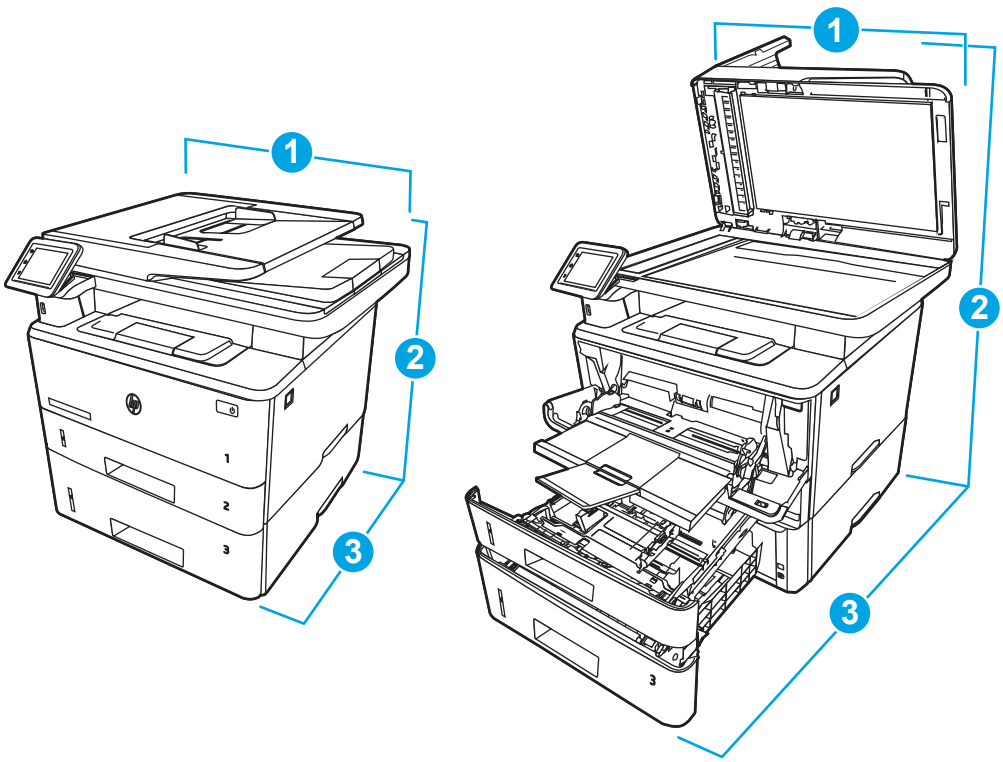

Table 1-13 Dimensions for the printer with the optional 550-sheet tray

Measurement	Printer fully closed	Printer fully opened
1. Height	452 mm (17.8 in)	706 mm (27.8 in)
2. Depth	390 mm (15.3 in)	839 mm (33 in)
3. Width	420 mm (16.5 in)	453 mm (17.8 in)
Weight (with cartridge)	16.6 kg (36.6 lb)	16.6 kg (36.6 lb)

Power consumption

Review the power consumption for each printer status or function.

Table 1-14 Power consumption (average, in watts)

Printing	Ready	Sleep	Auto-Off	Enabled at shipment	Off
510 W	7.5 W	0.9 W	0.9 W	0.06 W	0.06 W

Electrical specifications

Review the electrical specifications for the printer.

NOTE: Power requirements are based on the country/region where the printer is sold. The values in the following table are subject to change.

CAUTION: Do not convert operating voltages. This can damage the printer and void the printer warranty.

Table 1-15 Recommended voltage

Specification	110-volt models	220-volt models
Power requirements (Volts)[1]	100 to 127 volts (± 10%) 50/60 Hz (± 3 Hz)	220 to 240 volts (± 10%) 50/60 Hz (± 3 Hz)

[1] Power reported is highest value measured for all printer models using standard voltages.

Acoustic emissions

Review the acoustic emissions, including sound power level and sound pressure level.

Table 1-16 Sound power level

Acoustics: Sound power level (pages per minute (ppm))	Declared per ISO 9296
Printing (38 ppm)	L_{wAD} = 6.7 Bels(A)
Copying	L_{wAD} = 6.8 Bels(A)
Scanning	L_{wAD} = 6.3 Bels(A)
Ready	Inaudible

Table 1-17 Sound pressure level

Acoustics: Sound pressure level (pages per minute (ppm))	Declared per ISO 9296
Printing (38 ppm)	L_{pAm} = 53 dB(A)
Copying	L_{pAm} = 54 dB(A)
Scanning	L_{pAm} = 48 dB(A)
Ready	Inaudible

Operating-environment range

In order to operate properly, the printer must be in an environment that meets certain specifications.

Table 1-18 Operating-environment specifications

Environment	Recommended	Storage
Temperature	15° to 27°C (59° to 80.6°F)	10° to 32.5°C (50° to 90.5°F)
Relative humidity	30% to 70% relative humidity (RH)	10% to 80% RH

Printer hardware setup and software installation

For basic setup instructions, see the Hardware Installation Guide that came with the printer. For additional instructions, go to HP support on the web.

Go to www.hp.com/support/ljmfp4101-4104 for HP's all-inclusive help for the printer, which includes the following information:

- Install and configure
- Learn and use
- Solve problems
- Download software and firmware updates
- Join support forums
- Find warranty and regulatory information
- Find instructions about how to use the Microsoft Add Printer tool

2 Paper trays

Discover how to load and use the paper trays, including how to load special items such as envelopes and labels.

The following information is correct at the time of publication. For current information, see www.hp.com/support/ljmfp4101-4104.

For more information:

HP's all-inclusive help for the printer includes the following information:

- Install and configure
- Learn and use
- Solve problems
- Download software and firmware updates
- Join support forums
- Find warranty and regulatory information

Use caution when loading the paper trays.

⚠ **CAUTION:** Do not extend more than one paper tray at a time.

Do not use paper tray as a step.

All trays must be closed while relocating/moving product.

Keep hands out of paper trays or drawers when closing.

If the printer has a keyboard, close keyboard tray when not in use.

Load paper to Tray 1 (multipurpose tray)

The following information describes how to load paper into Tray 1.

Load Paper Tray 1

Follow these steps to load paper in Tray 1.

This tray holds up to 100 sheets of 75 g/m^2 (20 lb) paper.

⚠ **CAUTION:** To avoid jams, never add or remove paper from Tray 1 during printing.

1. Open Tray 1 by grasping the handles on the left and right side of the tray and pulling down.

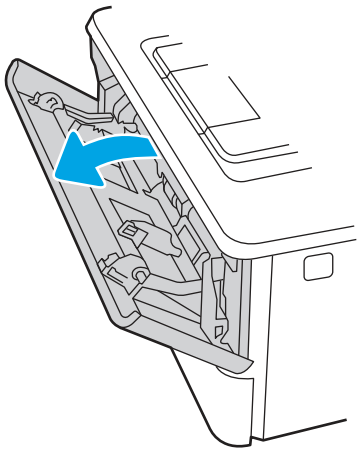

2. Slide out the tray extension.

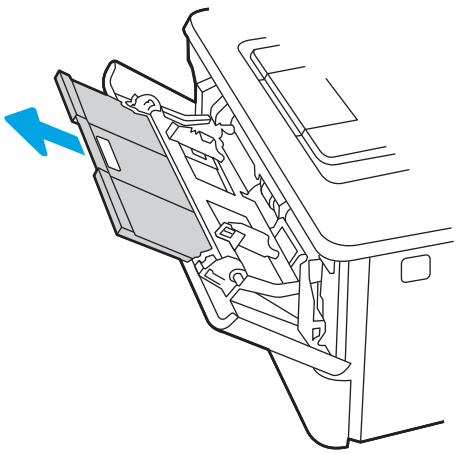

3. For long paper, flip out the tray extension to support the paper.

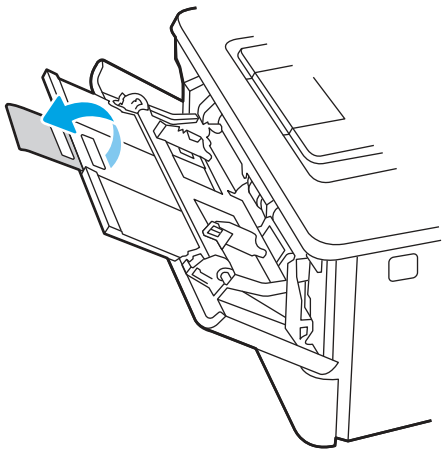

4. Press down on the tab on the right paper guide, and then spread the paper guides to the correct size.

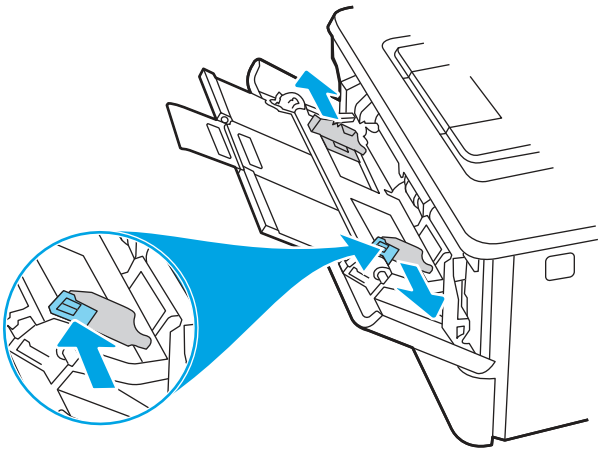

5. Load the paper into the tray. Make sure that the paper fits under the tabs and below the maximum height indicators.

   For information about how to orient the paper, see Tray 1 paper orientation on page 18.

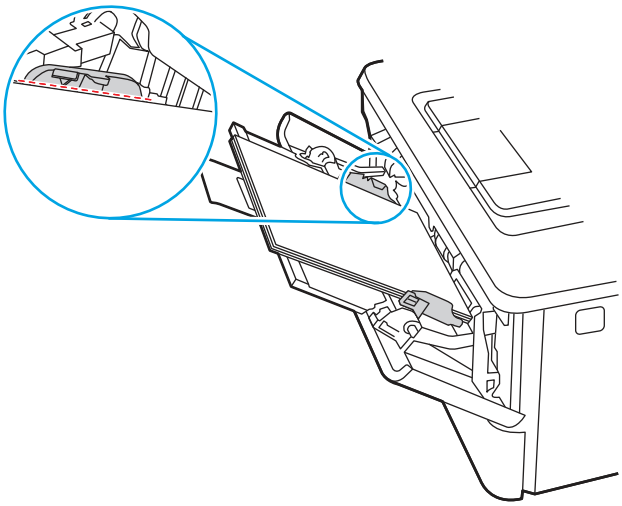

6. Press down on the tab on the right paper guide, and then adjust the paper guides so that they lightly touch the paper stack but do not bend the paper.

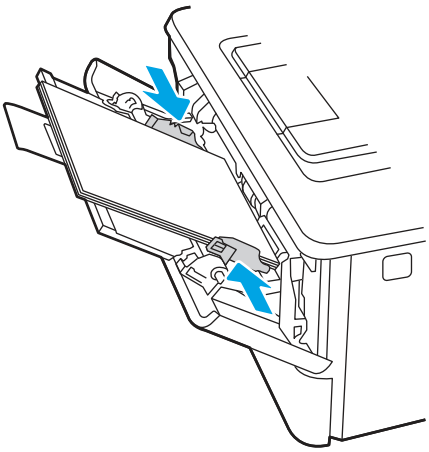

7. At the computer, begin the printing process from the software application. Make sure that the driver is set to the correct paper type and size for the paper being printed from the tray.

Tray 1 paper orientation

When using paper that requires a specific orientation, load it according to the information in the following table.

Table 2-1 **Tray 1 paper orientation**

Paper type	Output	How to load paper
Letterhead or preprinted	1-sided printing	Face-up Top edge leading into the printer 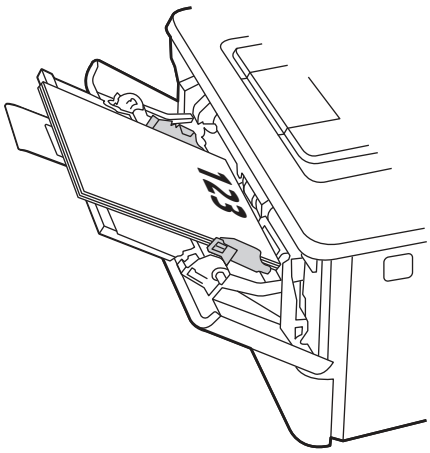

Table 2-1 Tray 1 paper orientation (continued)

Paper type	Output	How to load paper
Letterhead or preprinted	2-sided printing	Face-down Bottom edge leading into the printer 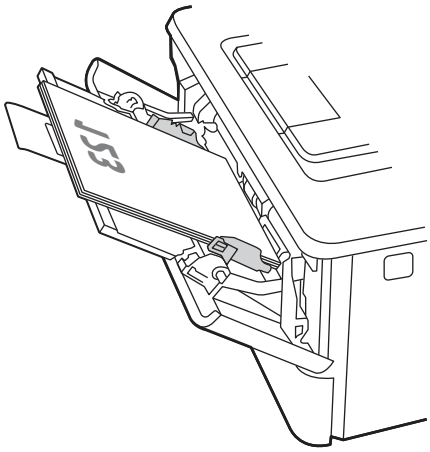

Load paper to Tray 2

Review the following information about loading paper to Tray 2.

Load Paper Tray 2

This tray holds up to 250 sheets of 75 g/m^2 (20 lb) paper.

CAUTION: Do not print envelopes, labels, or unsupported sizes of paper from Tray 2. Print these types of paper only from Tray 1.

1. Pull the tray out and lift up slightly to remove it completely from the printer.

NOTE: Do not open this tray while it is in use.

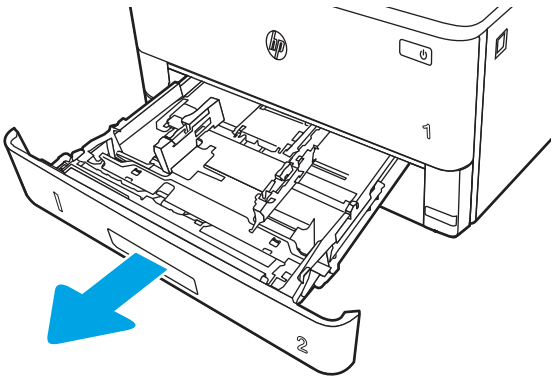

2. Adjust the paper-width guides by squeezing the adjustment latch on the left guide and sliding the guides to the size of the paper being used.

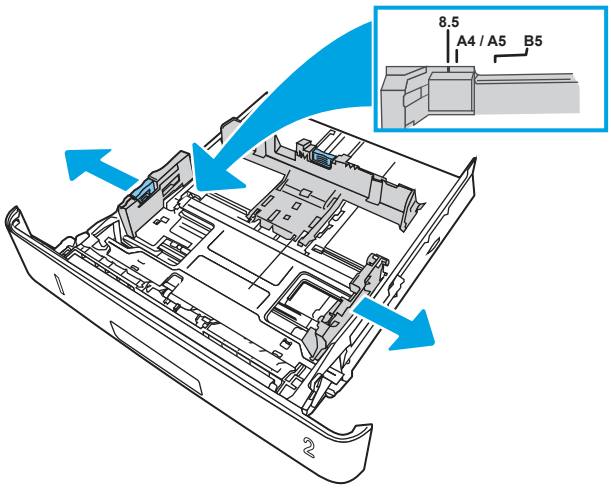

3. Adjust the paper-length guide by squeezing the adjustment latch and sliding the guides to the size of the paper being used.

NOTE: Tray 2 extends out of the back of the printer when legal-size or A4-size paper is loaded.

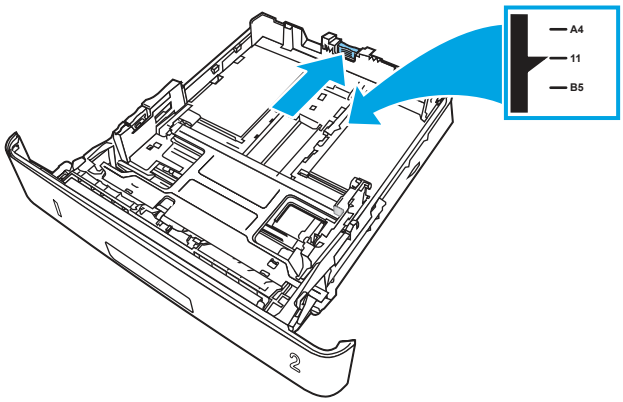

4. Load the paper into the tray. For information about how to orient the paper, see Tray 2 paper orientation on page 21.

NOTE: Do not adjust the paper guides tightly against the paper stack. Adjust them to the indentations or markings in the tray.

NOTE: To prevent jams, adjust the paper guides to the correct size and do not overfill the tray. Be sure that the top of the stack is below the tray full indicators, as shown in the enlargement in the illustration.

NOTE: If the tray is not adjusted correctly, an error message might display during printing or the paper might jam.

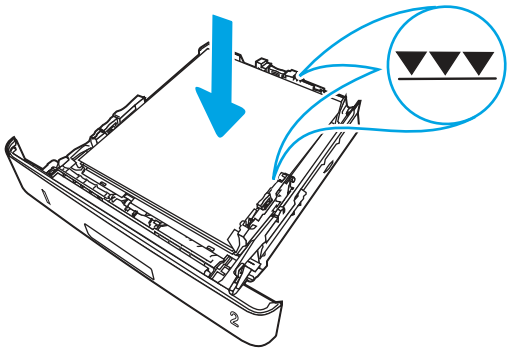

5. Slide the tray completely into the printer.

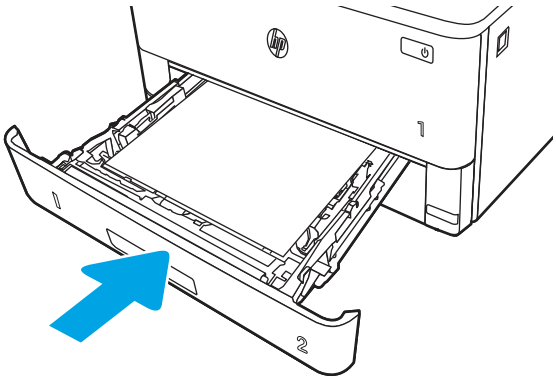

6. At the computer, begin the printing process from the software application. Make sure that the driver is set to the correct paper type and size for the paper being printed from the tray.

Tray 2 paper orientation

When using paper that requires a specific orientation, load it according to the information in the following table.

Table 2-2 **Tray 2 paper orientation**

Paper type	Output	How to load paper
Letterhead or preprinted	1-sided printing	Face-down Top edge toward the front of the tray 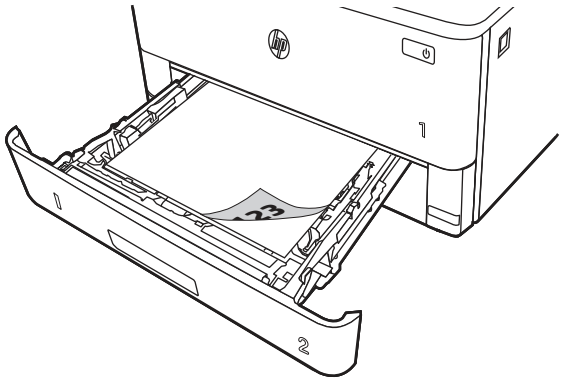

Table 2-2 Tray 2 paper orientation (continued)

Paper type	Output	How to load paper
Letterhead or preprinted	2-sided printing	Face-up Top edge toward the back of the tray 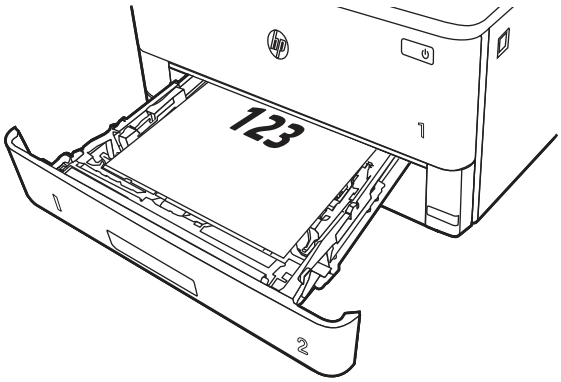

Load paper to Tray 3 (optional accessory)

Review the following information about loading paper to Tray 3.

Load paper Tray 3

This tray holds up to 550 sheets of 75 g/m^2 (20 lb) paper.

CAUTION: Do not print envelopes, labels, or unsupported sizes of paper from Tray 3. Print these types of paper only from Tray 1.

1. Pull the tray out and lift up slightly to remove it completely from the printer.

NOTE: Do not open this tray while it is in use.

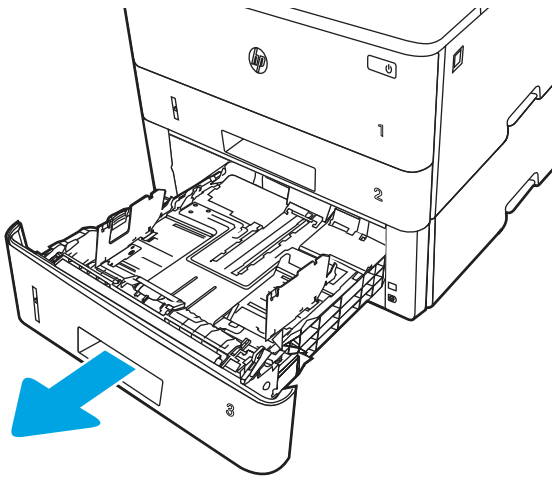

2. Adjust the paper-width guides by squeezing the adjustment latch on the left guide and sliding the guides to the size of the paper being used.

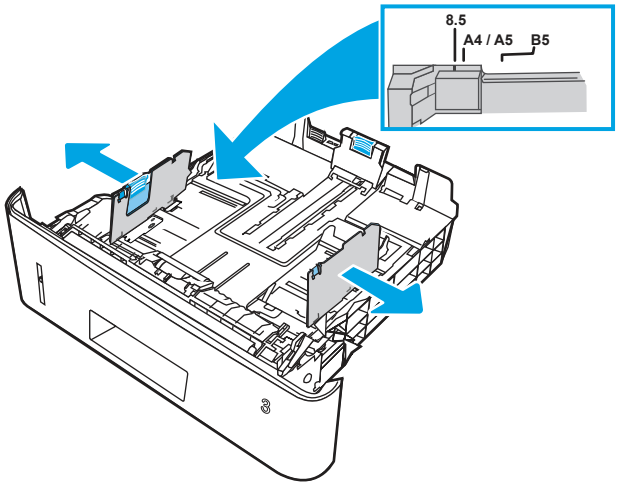

3. Adjust the paper-length guide by squeezing the adjustment latch and sliding the guides to the size of the paper being used.

NOTE: Tray 3 extends out of the back of the printer when legal-size or A4-size paper is loaded.

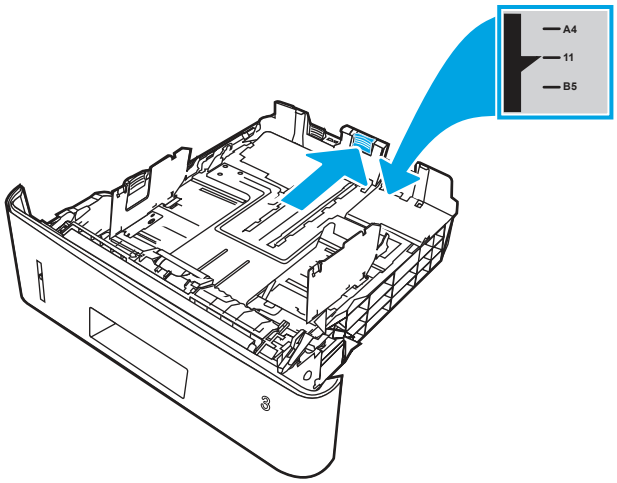

4. Load paper into the tray. For information about how to orient the paper, see Tray 3 paper orientation on page 24.

NOTE: Do not adjust the paper guides tightly against the paper stack. Adjust them to the indentations or markings in the tray.

NOTE: To prevent jams, adjust the paper guides to the correct size and do not overfill the tray. Be sure that the top of the stack is below the tray full indicator, as shown in the enlargement in the illustration.

NOTE: If the tray is not adjusted correctly, an error message might display during printing or the paper might jam.

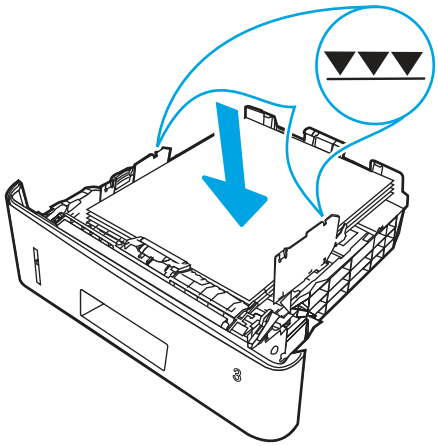

5. Slide the tray completely into the printer.

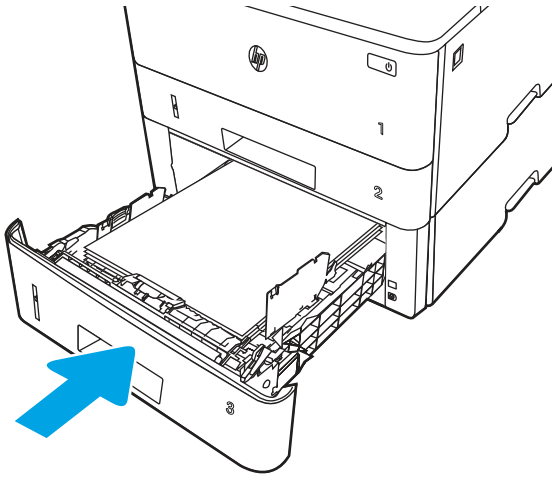

6. At the computer, begin the printing process from the software application. Make sure that the driver is set to the correct paper type and size for the paper being printed from the tray.

Tray 3 paper orientation

When using paper that requires a specific orientation, load it according to the information in the following table.

Table 2-3 Tray 3 paper orientation

Paper type	Output	How to load paper
Letterhead or preprinted	1-sided printing	Face-down Top edge at the front of the tray 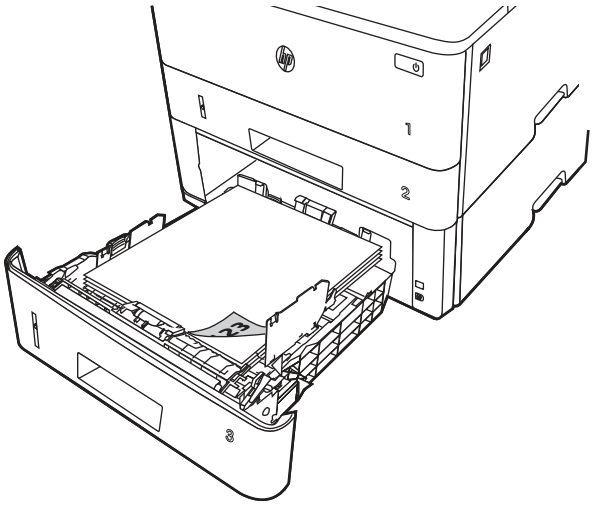
Letterhead or preprinted	2-sided printing	Face-up Top edge at the back of the tray 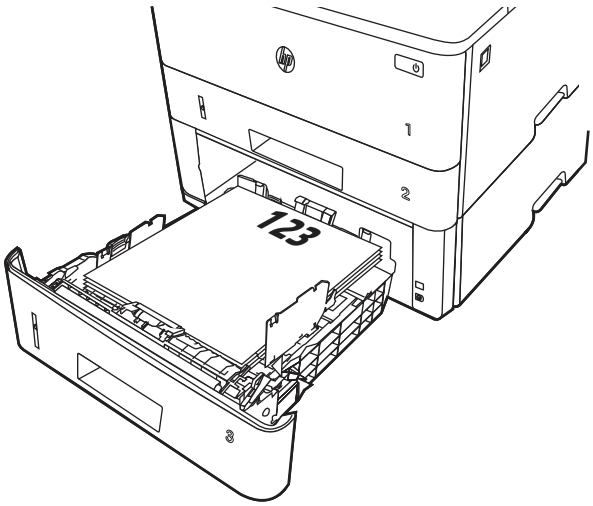

Load and print envelopes

Review the following information about loading and printing envelopes.

Introduction

The following information describes how to load and print envelopes.

Use only Tray 1 to print on envelopes. Tray 1 holds up to 10 envelopes.

To print envelopes using the manual feed option, follow these steps to select the correct settings in the print driver, and then load the envelopes into the tray after sending the print job to the printer.

Print envelopes

To print envelopes, follow these steps.

1. From the software program, select the **Print** option.
2. Select the printer from the list of printers, and then click or tap the **Properties** or **Preferences** button to open the print driver.

   NOTE: The name of the button varies for different software programs.

3. Click or tap the **Paper/Quality** tab.
4. In the **Paper size** drop-down list, select the correct size for the envelopes.
5. In the **Paper type** drop-down list, select **Envelope**.
6. In the **Paper source** drop-down list, select **Manual feed**.
7. Click the **OK** button to close the **Document Properties** dialog box.
8. In the **Print** dialog box, click the **Print** button to print the job.

Envelope orientation

When loading envelopes, load them according to the information in the following table.

Table 2-4 **Envelope orientation**

Tray	How to load
Tray 1	Face-up Short, postage-end leading into the printer 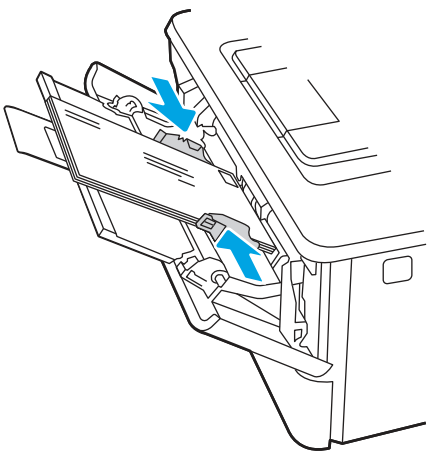

3 Supplies, accessories, and parts

Order supplies or accessories, replace the toner cartridges, or remove and replace another part.

The following information is correct at the time of publication. For current information, see www.hp.com/support/ljmfp4101-4104.

HP's all-inclusive help for the printer includes the following information:

- Install and configure
- Learn and use
- Solve problems
- Download software and firmware updates
- Join support forums
- Find warranty and regulatory information

Dynamic Security Enabled Printers

This printer is intended to work only with cartridges that have a new or reused HP chip. A reused HP chip enables the use of reused, remanufactured, and refilled cartridges.

The printer uses dynamic security measures to block cartridges using a non-HP chip. Periodic firmware updates delivered over the internet will maintain the effectiveness of the dynamic security measures and block cartridges that previously worked.

Updates can improve, enhance, or extend the printer's functionality and features, protect against security threats, and serve other purposes, but these updates can also block cartridges using a non-HP chip from working in the printer, including cartridges that work today. Unless you are enrolled in certain HP programs such as Instant Ink or use other services that require automatic online firmware updates, most HP printers can be configured to receive updates either automatically or with a notification that allows you to choose whether to update or not. For more information on dynamic security and how to configure online firmware updates, please go to www.hp.com/learn/ds.

Order supplies, accessories, and parts

Find out how to obtain replacement supplies, accessories, and parts for the printer.

Ordering

Order parts, supplies, or accessories through one of the following channels.

Table 3-1 **Ordering options**

Ordering option	Ordering information
Order supplies and paper	www.hp.com
Order genuine HP parts or accessories	www.hp.com/buy/parts

Table 3-1 Ordering options (continued)

Ordering option	Ordering information
Order through service or support providers	Contact an HP-authorized service or support provider.
Order using the HP Embedded Web Server (EWS)	To access, in a supported web browser on your computer, enter the printer IP address or host name in the address/URL field. The EWS contains a link to the HP website, which provides options for purchasing Original HP supplies.

Supplies and accessories

Find information about the supplies and accessories that are available for your printer.

NOTE: Cartridges are for distribution and use with their designated product only; they will not work with other printer models.

Table 3-2 Supplies - For use with 4101 models only

Item	Description	Cartridge number	Part number
HP 148A Black Original LaserJet Toner Cartridge	Standard-capacity replacement black toner cartridge	148A	W1480A
HP 148X High Yield Black Original LaserJet Toner Cartridge	High-capacity replacement black toner cartridge	148X	W1480X

Table 3-3 Supplies - For use with 4102 models only

Item	Description	Cartridge number	Part number
HP 149A Black Original LaserJet Toner Cartridge	Standard-capacity replacement black toner cartridge	149A	W1490A
HP 149X High Yield Black Original LaserJet Toner Cartridge	High-capacity replacement black toner cartridge	149X	W1490X

Table 3-4 Accessories

Item	Description	Part number
HP LaserJet 550-sheet Paper Tray	Optional (Tray 3) 550-sheet paper feeder	D9P29A

Customer self-repair parts

Customer self-repair (CSR) parts are available for many HP LaserJet printers to reduce repair time.

More information about the CSR program and benefits can be found at www.hp.com/go/csr-support and www.hp.com/go/csr-faq.

Genuine HP replacement parts can be ordered at www.hp.com/buy/parts or by contacting an HP-authorized service or support provider. When ordering, one of the following will be needed: part number, serial number (found on back of printer), product number, or printer name.

- Parts listed as **Mandatory** self-replacement are to be installed by the customer unless the customer is willing to pay HP service personnel to perform the repair. For these parts, on-site or return-to-depot support is not provided under the HP printer warranty.
- Parts listed as **Optional** self-replacement can be installed by HP service personnel at your request for no additional charge during the printer warranty period.

Table 3-5 **Customer self-repair parts**

Item	Description	Self-replacement options	Part number
Multipurpose tray roller	Replacement tray roller	Mandatory	RL2-0656-000CN
250-sheet paper input tray	Replacement cassette for Tray 2	Mandatory	RM2-5392-000CN
HP LaserJet 1 x 550 Paper Feeder	550-sheet paper feeder (optional Tray 3)	Mandatory	D9P29A
Tray 2 paper pickup roller assembly	Replacement Tray 2 pickup rollers	Mandatory	RM2-5452-000CN
Tray 3 paper pickup roller assembly	Replacement Tray 3 pickup rollers	Mandatory	RM2-5741-000CN
Tray 2 separation roller assembly	Replacement Tray 2 separation rollers	Mandatory	RM2-5397-000CN
Tray 3 separation roller assembly	Replacement Tray 3 separation rollers	Mandatory	RM2-5745-000CN

Configure the HP toner-cartridge-protection supply settings

A network administrator can configure the toner-cartridge-protection settings using the printer control panel or the HP Embedded Web Server (EWS).

Introduction

Use HP Cartridge Policy and Cartridge Protection to control which cartridges are installed in the printer and protect the cartridges that are installed from theft.

- Cartridge Policy: This feature protects the printer from counterfeit toner cartridges by allowing only genuine HP cartridges to be used with the printer. Using genuine HP cartridges ensures the best possible print quality. When someone installs a cartridge that is not a genuine HP cartridge, the printer control panel displays a message that the cartridge is unauthorized and it provides information explaining how to proceed.
- Cartridge Protection: This feature permanently associates toner cartridges with a specific printer, or fleet of printers, so they cannot be used in other printers. Protecting cartridges protects your investment. When this feature is enabled, if someone attempts to transfer a protected cartridge from the original printer into an unauthorized printer, that printer will not print with the protected cartridge. The printer control panel displays a message that the cartridge is protected, and it provides information explaining how to proceed.

⚠ CAUTION: After enabling cartridge protection for the printer, all subsequent toner cartridges installed in the printer are automatically and *permanently* protected. To avoid protecting a new cartridge, disable the feature *before* installing the new cartridge.

Turning the feature off does not turn off protection for cartridges that are currently installed.

Both features are off by default. Follow these procedures to enable or disable them.

Enable or disable the Cartridge Policy feature

The Cartridge Policy feature can be enabled or disabled using the control panel or the Embedded Web Server (EWS).

NOTE: Enabling or disabling this feature might require entering an administrator password.

Check with your administrator to determine if an administrator password has been set. EWS passwords cannot be recovered.

Use the printer control panel to enable the Cartridge Policy feature

From the printer control panel, a network administrator can enable the Cartridge Policy feature. This allows only genuine HP cartridges to be used with the printer.

1. From the Home screen on the printer control panel, swipe the tab at the top of the screen downward to open the Dashboard, and then touch the Setup icon .
2. Open the following menus:
   a. Supply Settings
   b. Cartridge Policy
3. Touch Authorized HP to enable the feature.

Use the printer control panel to disable the Cartridge Policy feature

From the printer control panel, a network administrator can disable the Cartridge Policy feature. This removes the restriction that only genuine HP cartridges can be used.

1. From the Home screen on the printer control panel, swipe the tab at the top of the screen downward to open the Dashboard, and then touch the Setup icon .
2. Open the following menus:
   a. Supply Settings
   b. Cartridge Policy
3. Touch Off to disable the feature.

Use the HP Embedded Web Server (EWS) to enable the Cartridge Policy feature

From the EWS, a network administrator can enable the Cartridge Policy feature. This allows only genuine HP cartridges to be used with the printer.

1. Open the HP Embedded Web Server (EWS):
   a. From the Home screen on the printer control panel, touch the Wireless icon or the Ethernet icon to view the printer's IP address or host name.

b. Open a web browser, and in the address line, type the IP address or host name exactly as it displays on the printer control panel. Press the Enter key on the computer keyboard. The EWS opens.

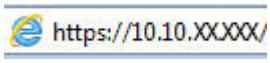

NOTE: If a message displays in the web browser indicating that the website might not be safe, select the option to continue to the website. Accessing this website will not harm the computer.

2. On the EWS Home page, click the **Settings** tab.
3. In the left navigation pane, click **Supplies** to expand the options, and then click **Supply Settings**.
4. In the **Cartridge Policy** area, click the drop-down menu and select **Authorized HP**.
5. Click **Apply** to save the changes.

Use the HP Embedded Web Server (EWS) to disable the Cartridge Policy feature

From the EWS, a network administrator can disable the Cartridge Policy feature. This removes the restriction that only genuine HP cartridges can be used.

1. Open the HP Embedded Web Server (EWS):
   a. From the Home screen on the printer control panel, touch the Wireless icon or the Ethernet icon to view the printer's IP address or host name.
   b. Open a web browser, and in the address line, type the IP address or host name exactly as it displays on the printer control panel. Press the Enter key on the computer keyboard. The EWS opens.

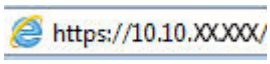

NOTE: If a message displays in the web browser indicating that the website might not be safe, select the option to continue to the website. Accessing this website will not harm the computer.

2. On the EWS Home page, click the **Settings** tab.
3. In the left navigation pane, click **Supplies** to expand the options, and then click **Supply Settings**.
4. In the **Cartridge Policy** area, click the drop-down menu and select **Off**.
5. Click **Apply** to save the changes.

Enable or disable the Cartridge Protection feature

The Cartridge Protection feature can be enabled or disabled using the control panel or the Embedded Web Server (EWS).

NOTE: Enabling or disabling this feature might require entering an administrator password.

Check with your administrator to determine if an administrator password has been set. EWS passwords cannot be recovered.

Use the printer control panel to enable the Cartridge Protection feature

From the printer control panel, a network administrator can enable the Cartridge Protection feature. This protects the cartridges associated with the printer from being stolen and used in other printers.

1. From the Home screen on the printer control panel, swipe the tab at the top of the screen downward to open the Dashboard, and then touch the Setup icon ⚙.
2. Open the following menus:
   a. Supply Settings
   b. Cartridge Protection
3. Touch Protect Cartridges to enable the feature.

⚠ CAUTION: After enabling cartridge protection for the printer, all subsequent toner cartridges installed in the printer are automatically and *permanently* protected. To avoid protecting a new cartridge, disable the feature *before* installing the new cartridge.

Turning the feature off does not turn off protection for cartridges that are currently installed.

Use the printer control panel to disable the Cartridge Protection feature

From the printer control panel, a network administrator can disable the Cartridge Protection feature. This removes protection for any new cartridges installed in the printer.

1. From the Home screen on the printer control panel, swipe the tab at the top of the screen downward to open the Dashboard, and then touch the Setup icon ⚙.
2. Open the following menus:
   a. Supply Settings
   b. Cartridge Protection
3. Touch Off to disable the feature.

Use the HP Embedded Web Server (EWS) to enable the Cartridge Protection feature

From the EWS, a network administrator can enable the Cartridge Protection feature. This protects the cartridges that are associated with the printer from being stolen and used in other printers.

1. Open the HP Embedded Web Server (EWS):
   a. From the Home screen on the printer control panel, touch the Wireless icon or the Ethernet icon to view the printer's IP address or host name.
   b. Open a web browser, and in the address line, type the IP address or host name exactly as it displays on the printer control panel. Press the Enter key on the computer keyboard. The EWS opens.

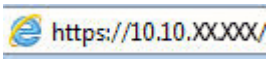

NOTE: If a message displays in the web browser indicating that the website might not be safe, select the option to continue to the website. Accessing this website will not harm the computer.

2. On the EWS Home page, click the **Settings** tab.
3. In the left navigation pane, click **Supplies** to expand the options, and then click **Supply Settings**.
4. In the **Cartridge Protection** area, click the drop-down menu and select **On**.
5. Click **Apply** to save the changes.

CAUTION: After enabling Cartridge Protection for the printer, all subsequent toner cartridges installed in the printer are automatically and *permanently* protected. To avoid protecting a new cartridge, disable the feature *before* installing the new cartridge.

Turning the feature off does not turn off protection for cartridges that are currently installed.

Use the HP Embedded Web Server (EWS) to disable the Cartridge Protection feature

From the EWS, a network administrator can disable the Cartridge Protection feature. This removes protection for any new cartridges installed in the printer.

1. Open the HP Embedded Web Server (EWS):
   a. From the Home screen on the printer control panel, touch the Wireless icon or the Ethernet icon to view the printer's IP address or host name.
   b. Open a web browser, and in the address line, type the IP address or host name exactly as it displays on the printer control panel. Press the Enter key on the computer keyboard. The EWS opens.

   https://10.10.XXXXX/

   NOTE: If a message displays in the web browser indicating that the website might not be safe, select the option to continue to the website. Accessing this website will not harm the computer.
2. On the EWS Home page, click the **Settings** tab.
3. In the left navigation pane, click **Supplies** to expand the options, and then click **Supply Settings**.
4. In the **Cartridge Protection** area, click the drop-down menu and select **Off**.
5. Click **Apply** to save the changes.

Replace the toner cartridge

Replace the toner cartridge if you receive a message on the printer, or if you have print quality problems.

Toner cartridge information

Review details about ordering replacement toner cartridges.

The printer indicates when the toner cartridge level is low and very low. The actual toner cartridge life remaining can vary. Consider having a replacement cartridge available to install when print quality is no longer acceptable.

Continue printing with the current cartridge until redistributing the toner no longer yields acceptable print quality. To redistribute the toner, remove the toner cartridge from the printer and gently rock

the cartridge back and forth end to end. For graphical representation, see the cartridge replacement instructions. Reinsert the toner cartridge into the printer, and then close the cover.

To purchase cartridges or check cartridge compatibility for the printer, go to http://www.hp.com/go/suresupply. Scroll to the bottom of the page and verify that the country/region is correct.

Table 3-6 Supplies - For use with 4101 models only

Item	Description	Cartridge number	Part number
HP 148A Black Original LaserJet Toner Cartridge	Standard-capacity replacement black toner cartridge	148A	W1480A
HP 148X High Yield Black Original LaserJet Toner Cartridge	High-capacity replacement black toner cartridge	148X	W1480X

Table 3-7 Supplies - For use with 4102 models only

Item	Description	Cartridge number	Part number
HP 149A Black Original LaserJet Toner Cartridge	Standard-capacity replacement black toner cartridge	149A	W1490A
HP 149X High Yield Black Original LaserJet Toner Cartridge	High-capacity replacement black toner cartridge	149X	W1490X

NOTE: High-yield toner cartridges contain more toner than standard cartridges for increased page yield. For more information, go to www.hp.com/go/toneryield.

Do not remove the toner cartridge from its package until it is time to replace it.

CAUTION: To prevent damage to the toner cartridge, do not expose it to light for more than a few minutes. Cover the green imaging drum if the toner cartridge must be removed from the printer for an extended period of time.

The following illustration shows the toner cartridge components.

Figure 3-1 Toner cartridge components

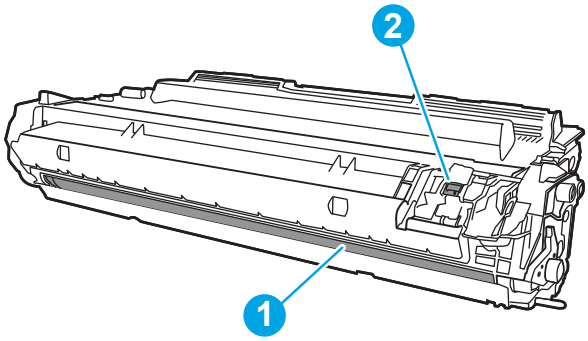

Number	Description
1	Imaging drum CAUTION: Do not touch the imaging drum. Fingerprints can cause print-quality problems.
2	Memory chip

CAUTION: If toner gets on clothing, wipe it off by using a dry cloth and wash the clothes in cold water. Hot water sets toner into fabric.

NOTE: Information about recycling used toner cartridges is in the toner cartridge box or at www.hp.com/hprecycle.

Remove and replace the cartridge

Follow these steps to replace the toner cartridge.

1. Press the front door release button.

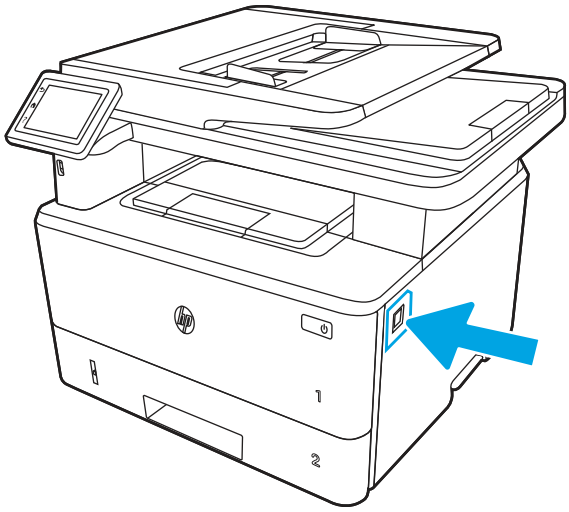

2. Open the front door.

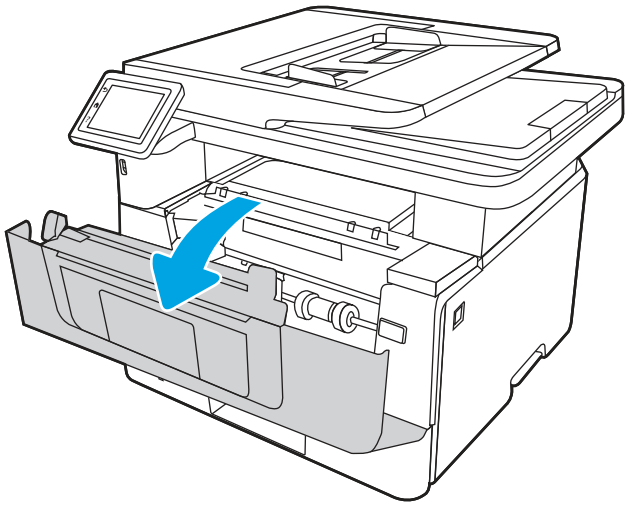

3. Remove the used toner cartridge from the printer.

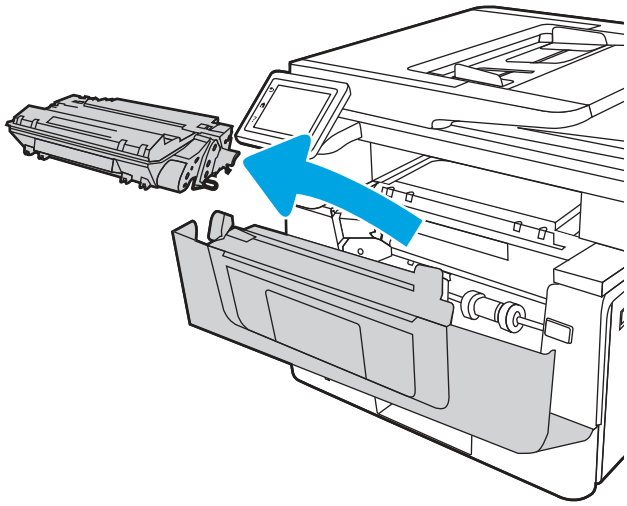

4. Remove the new toner cartridge package from the box, and then pull the release tab on the packaging.

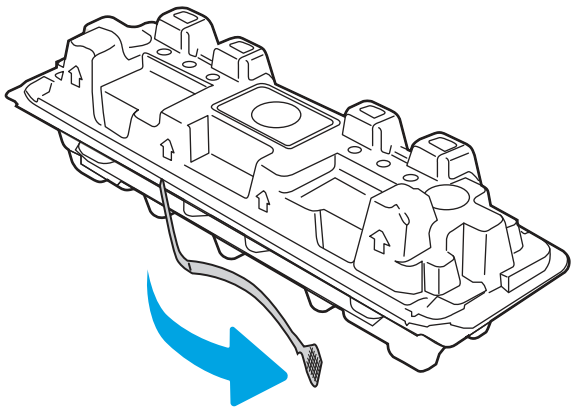

5. Remove the toner cartridge from the opened packaging shell. Place the used toner cartridge in the shell for recycling.

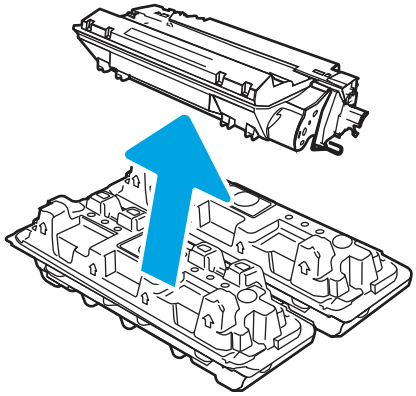

6. Hold both ends of the toner cartridge and rock it end to end to distribute the toner evenly inside the cartridge.

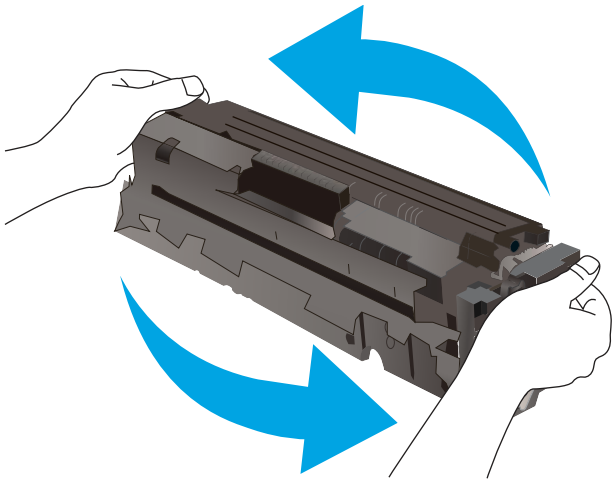

7. Align the toner cartridge with the tracks inside the printer, and install the toner cartridge until it is firmly seated.

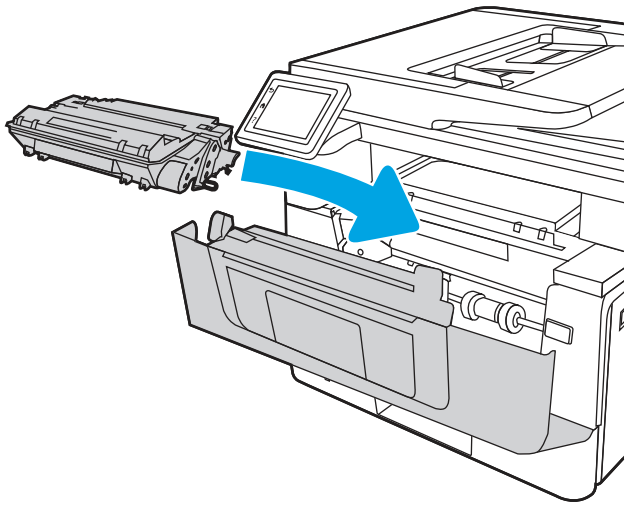

8. Close the front door.

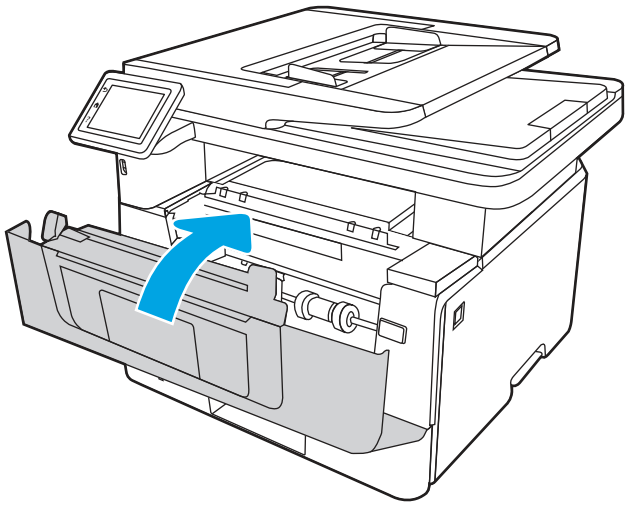

4 Print

Print using the software, or print from a mobile device or USB flash drive.

The following information is correct at the time of publication. For current information, see www.hp.com/support/ljmfp4101-4104.

For more information:

HP's all-inclusive help for the printer includes the following information:

- Install and configure
- Learn and use
- Solve problems
- Download software and firmware updates
- Join support forums
- Find warranty and regulatory information

Print tasks (Windows)

Learn about common printing tasks for Windows users.

How to print (Windows)

Use the **Print** option from a software application to select the printer and basic options for your print job.

The following procedure describes the basic printing process for Windows.

1. From the software program, select the **Print** option.
2. Select the printer from the list of printers. To change settings, click the **Properties** or **Preferences** button to open the print driver.

   NOTE:

   - The name of the button varies for different software programs.
   - For the HP PCL-6 driver, the HP AiO Printer Remote application downloads additional driver features when **More settings** is selected.
   - For more information, click the Help (?) button in the print driver.

3. Click the tabs in the print driver to configure the available options. For example, set the paper orientation on the **Finishing** tab, and set the paper source, paper type, paper size, and quality settings on the **Paper/Quality** tab.
4. Click the **OK** button to return to the **Print** dialog box. Select the number of copies to print from this screen.

5. Click the **Print** button to print the job.

Automatically print on both sides (Windows)

If your printer has an automatic duplexer installed, you can automatically print on both sides of the paper. Use a paper size and type supported by the duplexer.

1. From the software program, select the **Print** option.
2. Select the printer from the list of printers, and then click the **Properties** or **Preferences** button to open the print driver.

NOTE:

- The name of the button varies for different software programs.
- For the HP PCL-6 driver, the HP AiO Printer Remote application downloads additional driver features when **More settings** is selected.

3. Click the **Finishing** tab.
4. Select **Print on both sides**. Click **OK** to close the **Document Properties** dialog.
5. In the **Print** dialog, click **Print** to print the job.

Manually print on both sides (Windows)

Use this procedure for printers that do not have an automatic duplexer installed or to print on paper that the duplexer does not support.

1. From the software program, select the **Print** option.
2. Select the printer from the list of printers, and then click the **Properties** or **Preferences** button to open the print driver.

NOTE:

- The name of the button varies for different software programs.
- For the HP PCL-6 driver, the HP AiO Printer Remote application downloads additional driver features when **More settings** is selected.

3. Click the **Finishing** tab.
4. Select **Print on both sides (manually)**, and then click **OK** to close the **Document Properties** dialog.
5. In the **Print** dialog, click **Print** to print the first side of the job.
6. Retrieve the printed stack from the output bin, and place it in Tray 1.
7. If prompted, select the appropriate control panel button to continue.

Print multiple pages per sheet (Windows)

When you print from a software application using the **Print** option, you can select an option to print multiple pages on a single sheet of paper. For example, you might want to do this if you are printing a very large document and want to save paper.

1. From the software program, select the **Print** option.

2. Select the printer from the list of printers, and then click the **Properties** or **Preferences** button to open the print driver.

NOTE:

- The name of the button varies for different software programs.
- For the HP PCL-6 driver, the HP AiO Printer Remote application downloads additional driver features when **More settings** is selected.

3. Click the **Finishing** tab.
4. Select the number of pages per sheet from the **Pages per sheet** drop-down.
5. Select the correct **Print page borders**, **Page order**, and **Orientation** options. Click **OK** to close the **Document Properties** dialog.
6. In the **Print** dialog, click **Print** to print the job.

Select the paper type (Windows)

When you print from a software application using the **Print** option, you can set the paper type you are using for your print job. For example, if your default paper type is Letter, but you are using a different paper type for a print job, select that specific paper type.

1. From the software program, select the **Print** option.
2. Select the printer from the list of printers, and then click or tap the **Properties** or **Preferences** button to open the print driver.

NOTE:

- The name of the button varies for different software programs.
- For the HP PCL-6 driver, the HP AiO Printer Remote application downloads additional driver features when **More settings** is selected.

3. Click the **Paper/Quality** tab.
4. Select the option for the type of paper you are using, and then click **OK**.
5. Click **OK** to close the **Document Properties** dialog.
6. In the **Print** dialog, click **Print** to print the job.

Additional print tasks

Locate information on the Web for performing common printing tasks.

Go to www.hp.com/support/ljmfp4101-4104.

Instructions are available for print tasks, such as the following:

- Create and use printing shortcuts or presets
- Select the paper size, or use a custom paper size
- Select the page orientation

- Create a booklet
- Scale a document to fit a specific paper size
- Print the first or last pages of the document on different paper
- Print watermarks on a document

Print tasks (macOS)

Print using the HP printing software for macOS, including how to print on both sides or print multiple pages per sheet.

How to print (macOS)

Use the **Print** option from a software application to select the printer and basic options for your print job.

The following procedure describes the basic printing process for macOS.

1. Click the **File** menu, and then click the **Print** option.
2. Select the printer.
3. Click **Show Details** or **Copies & Pages**, and then select other menus to adjust the print settings.

   NOTE: The name of the item varies for different software programs.

4. Click the **Print** button.

Automatically print on both sides (macOS)

If your printer has an automatic duplexer installed, you can automatically print on both sides of the paper. Use a paper size and type supported by the duplexer.

This feature is available if you install the HP print driver. It might not be available if you are using AirPrint.

1. Click the **File** menu, and then click the **Print** option.
2. Select the printer.
3. Click **Show Details** or **Copies & Pages**, and then click the **Layout** menu.

   NOTE: The name of the item varies for different software programs.

4. Select a binding option from the **Two-Sided** drop-down list.
5. Click the **Print** button.

Manually print on both sides (macOS)

If your printer does not have an automatic duplexer installed, or you are using a paper size or type not supported by the duplexer, you can print on both sides of the paper using a manual process. You will need to reload the pages for the second side.

This feature is available if you install the HP print driver. It might not be available if you are using AirPrint.

1. Click the **File** menu, and then click the **Print** option.

2. Select the printer.
3. Click **Show Details** or **Copies & Pages**, and then click the **Manual Duplex** menu.

NOTE: The name of the item varies for different software programs.

4. Click the **Manual Duplex** check box, and select a binding option.
5. Go to the printer, and remove any blank paper that is in Tray 1.
6. Click the **Print** button.
7. Retrieve the printed stack from the output bin and place it with the printed-side facing down in the input tray.
8. If prompted, touch the appropriate control panel button to continue.

Print multiple pages per sheet (macOS)

When you print from a software application using the **Print** option, you can select an option to print multiple pages on a single sheet of paper. For example, you might want to do this if you are printing a very large document and want to save paper.

1. Click the **File** menu, and then click the **Print** option.
2. Select the printer.
3. Click **Show Details** or **Copies & Pages**, and then click the **Layout** menu.

NOTE: The name of the item varies for different software programs.

4. From the **Pages per Sheet** drop-down list, select the number of pages that you want to print on each sheet.
5. In the **Layout Direction** area, select the order and placement of the pages on the sheet.
6. From the **Border** menu, select the type of border to print around each page on the sheet.
7. Click the **Print** button.

Select the paper type (macOS)

When you print from a software application using the **Print** option, you can set the paper type you are using for your print job. For example, if your default paper type is Letter, but you are using a different paper type for a print job, select that specific paper type.

1. Click the **File** menu, and then click the **Print** option.
2. Select the printer.
3. Click **Show Details** or **Copies & Pages**, and then click the **Media & Quality** menu or the **Paper/Quality** menu.

NOTE: The name of the item varies for different software programs.

4. Select from the **Media & Quality** or **Paper/Quality** options.

NOTE: This list contains the master set of options available. Some options are not available on all printers.

- **Media Type**: Select the option for the type of paper for the print job.
- **Print Quality**: Select the resolution level for the print job.
- **EconoMode**: Select this option to conserve toner when printing drafts of documents.

5. Click the **Print** button.

Additional print tasks

Locate information on the Web for performing common printing tasks.

Go to www.hp.com/support/ljmfp4101-4104.

Instructions are available for print tasks, such as the following:

- Create and use printing shortcuts or presets
- Select the paper size, or use a custom paper size
- Select the page orientation
- Create a booklet
- Scale a document to fit a specific paper size
- Print the first or last pages of the document on different paper
- Print watermarks on a document

Store print jobs on the printer to print later or print privately

Store print jobs in the printer memory for printing at a later time.

Introduction

The following information provides procedures for creating and printing documents that are stored on the USB flash drive. These jobs can be printed at a later time or printed privately.

Before beginning

Review the requirements for using the job storage feature.

The job storage feature has the following requirements:

- A dedicated USB 2.0 storage device that is at least 16 GB in size must be installed in the rear host USB. This USB storage device holds the job storage jobs sent to the printer. Removing this USB storage device from the printer disables the job storage feature.
- If you are using an HP Universal Print Driver (UPD), you must use UPD version 5.9.0 or above.

Set up job storage

Set up job storage in the print driver, insert the storage media (USB flash drive) in the printer, and verify the feature is ready to use.

Before you begin, install the printer software if it is not already installed. Go to www.hp.com/support, click **Software and Drivers**, and then follow the onscreen instructions to download the latest HP software.

When the print driver is installed, the Job Storage option is set to **Automatic** by default. The option is located as follows:

- Windows: **Devices and Printers** > **Printer Properties** > **Device Settings**
- macOS: **Printers & Scanners** > **Options & Supplies**

To complete Job Storage setup:

1. Locate the rear USB port.

   NOTE: On some models, the rear USB port is covered. Remove the rear USB port cover before proceeding.

2. Insert the USB flash drive into the rear USB port.

   Figure 4-1 **Insert USB flash drive**

   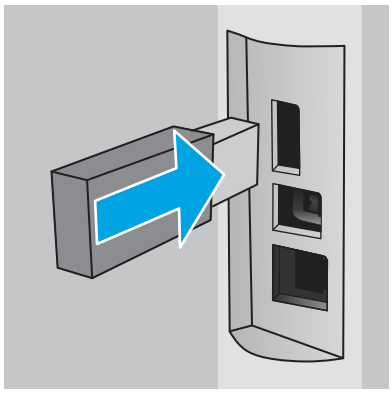

   A message displays on the control panel warning that the USB drive will be formatted. Select OK to complete the procedure.

3. Open the print driver to verify the **Job Storage** tab is visible. If it is visible, the feature is ready to use.

   From a software program, select the **Print** option, select your printer from the list of printers, and do the following:

   - **Windows:** Select **Properties** or **Preferences**. Click the **Job Storage** tab.

     If the **Job Storage** tab is not showing, activate it as follows:

     From the Start menu, open **Settings**, click **Devices**, and then click **Devices and Printers**. Right-click on the printer name and click **Printer Properties**. Click the **Device Settings** tab, click on **Job Storage**, and then select **Automatic**. Click **Apply** and **OK**.

   - **macOS:** The print driver displays the **Copies & Pages** menu. Open the drop-down list, and then click the **Job Storage** menu.

If the **Job Storage** menu is not showing, close the Print window and then reopen it to activate the menu.

Disable or enable the job storage feature

Disable the job storage feature to make it unavailable, even if a USB drive is inserted into the printer. Enable the feature to make it available again.

1. Open the **Printer Properties**:
   - **Windows:** From the Start menu, open **Settings**, click **Devices**, and then click **Devices and Printers**. Right-click on the printer and click **Printer properties**.
   - **macOS:** From the Apple menu, open **System Preferences**, and then click **Printers & Scanners**. Select the printer and click **Options & Supplies**.
2. Disable the Job Storage option as follows:
   - **Windows:** Click the **Device settings** tab, click on **Job Storage**, and then select **Disable**.
   - **macOS:** On the **Options** tab, clear the **Job Storage** check box.

To enable the feature, set the Job Storage option back to **Automatic** (Windows), or select the **Job Storage** check box (macOS).

Create a stored job (Windows)

Store jobs on the USB flash drive for private or delayed printing.

1. From the software program, select the **Print** option.
2. Select the printer from the list of printers, and then select **Properties** or **Preferences**.

   NOTE: The name of the button varies for different software programs.

   For the HP PCL 6 driver, the HP AiO Printer Remote application downloads additional driver features when **More settings** is selected.

3. Click the **Job Storage** tab.

   NOTE: If the **Job Storage** tab is not showing, follow the instructions in the "Disable or enable job storage feature" section to activate the tab.

4. Select a **Job Storage Mode** option:
   - **Proof and Hold**: Print and proof one copy of a job, and then print more copies. The first copy prints immediately. Printing of the subsequent copies must be initiated from the device's front control panel. For example, if 10 copies are sent, one copy prints immediately, and the other nine copies will print when the job is retrieved. The job is deleted after all copies are printed.
   - **Personal Job**: The job does not print until you request it at the printer control panel. For this job-storage mode, you can select one of the **Make Job Private/Secure** options. If you assign a personal identification number (PIN) to the job, you must provide the required PIN at the control panel. If you encrypt the job, you must provide the required password at the control panel. The print job is deleted from memory after it prints.

- **Quick Copy**: Print the requested number of copies of a job and store a copy of the job in the printer memory so you can print it again later. The job is deleted manually or by the job retention schedule.
- **Stored Job**: Store a job on the printer and allow other users to print the job at any time. For this job-storage mode, you can select one of the **Make Job Private/Secure** options. If you assign a personal identification number (PIN) to the job, the person who prints the job must provide the required PIN at the control panel. If you encrypt the job, the person who prints the job must provide the required password at the control panel. The job is deleted manually or by the job retention schedule.

5. To use a custom user name or job name, click the **Custom** button, and then enter the user name or the job name.

   Select which option to use if another stored job already has that name:

   - **Use Job Name + (1-99)**: Append a unique number to the end of the job name.
   - **Replace Existing File**: Overwrite the existing stored job with the new one.

6. Click the **OK** button to close the **Document Properties** dialog box. In the **Print** dialog box, click the **Print** button to print the job.

Create a stored job (macOS)

Store jobs on the USB flash drive for private or delayed printing.

1. Click the **File** menu, and then click the **Print** option.
2. In the **Printer** menu, select the printer.
3. Click **Show Details** or **Copies & Pages**, and then click the **Job Storage** menu.

   NOTE: If the **Job Storage** menu is not showing, follow the instructions in the "Disable or enable job storage feature" section to activate the menu.

4. In the **Mode** drop-down list, select the type of stored job.

   - **Proof and Hold**: Print and proof one copy of a job, and then print more copies. The first copy prints immediately. Printing of the subsequent copies must be initiated from the device's front control panel. For example, if 10 copies are sent, one copy prints immediately, and the other nine copies will print when the job is retrieved. The job is deleted after all copies are printed.
   - **Personal Job**: The job does not print until someone requests it at the printer control panel. If the job has a personal identification number (PIN), provide the required PIN at the control panel. The print job is deleted from memory after it prints.
   - **Quick Copy**: Print the requested number of copies of a job and store a copy of the job in the printer memory to print it again later. The job is deleted manually or by the job retention schedule.
   - **Stored Job**: Store a job on the printer and allow other users to print the job at any time. If the job has a personal identification number (PIN), the person who prints the job must provide the required PIN at the control panel. The job is deleted manually or by the job retention schedule.

5. To use a custom user name or job name, click the **Custom** button, and then enter the user name or the job name.

NOTE: **macOS 10.14 Mojave and later**: The print driver no longer includes the **Custom** button. Use the options below the **Mode** drop-down list to set up the saved job.

Select which option to use if another stored job already has that name.

- **Use Job Name + (1-99)**: Append a unique number to the end of the job name.
- **Replace Existing File**: Overwrite the existing stored job with the new one.

6. If you selected the **Stored Job** or **Personal Job** option in the **Mode** drop-down list, you can protect the job with a PIN. Type a 4-digit number in the **Use PIN to Print** field. When other people attempt to print this job, the printer prompts them to enter this PIN.
7. Click the **Print** button to process the job.

Print a stored job

Print a job that is stored on a USB flash drive.

1. From the Home screen on the printer control panel, touch the Print icon, and then touch Job Storage.
2. Scroll to and touch the name of the folder where the job is stored.
3. Scroll to and touch the name of the job that you want to print.

NOTE: If the job is private or encrypted, enter the PIN or password, and then touch Done.

4. To adjust the number of copies, touch the box to the left of the Print button and then enter the number of copies using the touch keypad. Touch Done to close the keypad.
5. Touch Print to print the job.

Delete a stored job

When a new job is stored on a USB flash drive, any previous jobs with the same user and job name are overwritten. If the memory on the USB flash drive is full, the following message displays on the printer control panel: **The USB flash storage device is out of memory. Delete unused jobs, and then try again.** Existing stored jobs must be deleted before additional print jobs can be stored.

Delete a job that is stored on the printer

Delete a job that is stored on a USB flash drive.

1. From the Home screen on the printer control panel, touch the Print icon, and then touch Job Storage.
2. Scroll to and touch the name of the folder where the job is stored.
3. Scroll to and touch the name of the job that you want to delete.

NOTE: If the job is private or encrypted, enter the PIN or password, and then touch Done.

4. Touch the Trash icon , and then touch Delete to delete the job.

Information sent to printer for Job Accounting purposes

Printing jobs sent from drivers on the client (e.g., PC) may send personally identifiable information to HP's Printing and Imaging devices. This information may include, but is not limited to, user name and client name from which the job originated that may be used for job accounting purposes, as determined by the Administrator of the printing device. This same information may also be stored with the job on the mass storage device (e.g., disk drive) of the printing device when using the job storage feature.

Mobile printing

Mobile and ePrint solutions enable easy printing to an HP printer from a laptop, tablet, smartphone, or other mobile device.

Introduction

Review the following information about mobile printing.

To see the full list of mobile and ePrint solutions and determine the best choice, go to www.hp.com/go/LaserJetMobilePrinting.

Wi-Fi Direct printing (wireless models only)

Wi-Fi Direct enables printing from a wireless mobile device without requiring a connection to a network or the Internet.

NOTE: Not all mobile operating systems are currently supported by Wi-Fi Direct.

Use **Wi-Fi Direct** to print wirelessly from the following devices:

- Android mobile devices compatible with the Android embedded print solution
- iPhone, iPad, or iPod touch using Apple AirPrint or the HP Smart app
- Android mobile devices using the HP Smart app or the Android embedded print solution
- PC and Mac devices using the HP ePrint Software
- HP Roam

For more information on Wi-Fi Direct printing, go to www.hp.com/go/wirelessprinting.

Wi-Fi Direct can be enabled or disabled from the printer control panel.

To turn on Wi-Fi Direct

To print wirelessly from mobile devices, Wi-Fi Direct must be turned on.

Follow these steps to turn on Wi-Fi Direct from the printer control panel.

1. From the Home screen on the printer control panel, swipe the tab at the top of the screen downward to open the Dashboard, and then touch the Wi-Fi Direct icon .
2. Touch the Settings icon .
3. If Wi-Fi Direct is set to Off, touch the switch to turn it on.

NOTE: In environments where more than one model of the same printer is installed, it might be helpful to provide each printer a unique Wi-Fi Direct name for easier printer identification when using Wi-Fi Direct printing.

To view the Wi-Fi Direct Name on the printer control panel, go to the Home screen, swipe the Dashboard tab downward, and then touch the Wi-Fi Direct icon .

Change the printer Wi-Fi Direct name

Change the printer Wi-Fi Direct name using the HP Embedded Web Server (EWS):

Step one: Open the HP Embedded Web Server

Use the EWS to manage your printer from a computer instead of the printer control panel.

Your printer must be connected to an IP-based network before you can access the EWS.

1. From the Home screen on the printer control panel, touch the Wireless icon or the Ethernet icon to view the printer's IP address or host name.
2. Open a web browser, and in the address line, type the IP address or host name exactly as it displays on the printer control panel. Press the Enter key on the computer keyboard. The EWS opens.

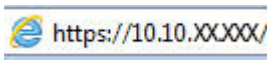

NOTE: If a message displays in the web browser indicating that the website might not be safe, select the option to continue to the website. Accessing this website will not harm the computer.

Step two: Change the Wi-Fi Direct name

Use the following procedure to change the Wi-Fi Direct name.

1. On the EWS Home page, click the **Network** tab.
2. In the left navigation pane, click **Wi-Fi Direct**.
3. Under the **Status** field, click **Edit Settings**.
4. In the **Wi-Fi Direct Name** field, enter the new name, and then click **Apply**.

HP ePrint via Email

Use HP ePrint to print documents by sending them as an email attachment to the printer's email address from any email-enabled device.

To use HP ePrint, the printer must meet these requirements:

- The printer must be connected to a wired or wireless network and have Internet access.
- HP Web Services must be enabled on the printer, and the printer must be registered with HP Connected.

Follow these steps to enable HP Web Services and register with HP Connected:

1. From the Home screen on the printer control panel, swipe the tab at the top of the screen downward to open the Dashboard, and then touch the HP ePrint icon .

2. On the HP ePrint screen, touch Setup in the lower right corner.
3. On the Setup Web Services screen, read the terms of use agreement, and then touch Yes to accept the terms and enable HP Web Services.

   The printer enables Web Services and then prints an information page. The information page contains the printer code that is necessary to register the printer on the HP web site.
4. Go to www.hpsmart.com to create an HP ePrint account and complete the setup process.

AirPrint

With Apple AirPrint, you can print directly to the printer from your iOS device or Mac computer, without having a print driver installed.

AirPrint is supported for iOS and from Mac computers running macOS (10.7 Lion and newer).

Use AirPrint to print directly to the printer from an iPad, iPhone (3GS or later), or iPod touch (third generation or later) in the following mobile applications:

- Mail
- Photos
- Safari
- iBooks
- Select third-party applications

To use AirPrint, the printer must be connected to the same network (sub-net) as the Apple device. For more information about using AirPrint and about which HP printers are compatible with AirPrint, go to www.hp.com/go/LaserJetMobilePrinting.

NOTE: Before using AirPrint with a USB connection, verify the version number. AirPrint versions 1.3 and earlier do not support USB connections.

Android embedded printing

HP's built-in print solution for Android and Kindle enables mobile devices to automatically find and print to HP printers that are either on a network or within wireless range for Wi-Fi Direct printing.

The printer must be connected to the same network (sub-net) as the Android device.

The print solution is built into the supported operating systems, so installing drivers or downloading software is not necessary.

For more information on how to use Android embedded printing and which Android devices are supported, go to www.hp.com/go/LaserJetMobilePrinting.

Print from a USB flash drive

Learn how to print directly from a USB flash drive.

Introduction

This printer features walk-up USB printing, for quickly printing files without sending them from a computer. The printer accepts standard USB flash drives in the USB port that is located below the control panel. It supports the following types of files:

- .pdf
- .jpg
- .prn and .PRN
- .pcl and .PCL
- .ps and .PS
- .doc and .docx
- .ppt and .pptx

Print USB documents

Print documents from a USB flash drive.

1. Insert the USB flash drive into the USB port on the front of the printer.

   A **Reading...** message displays on the printer control panel.

2. On the Memory Device Options screen, touch Print Documents.
3. Scroll to and touch the name of the file that you want to print. If the file is stored in a folder, touch the name of the folder, and then scroll to and touch the name of the file.
4. When the Print from USB menu displays, touch any of the following menu items to change the settings for the print job:

   a. 2-Sided

   b. Tray Selection

   c. Copies

   NOTE: For additional options, touch the Settings icon .

5. Touch Print to print the job.
6. Retrieve the printed job from the output bin, and then remove the USB flash drive from the USB port.

5 Copy

Make copies with the printer, learn how to copy a two-sided document, and locate additional copy tasks on the web.

The following information is correct at the time of publication. For current information, see www.hp.com/support/ljmfp4101-4104.

For more information:

HP's all-inclusive help for the printer includes the following information:

- Install and configure
- Learn and use
- Solve problems
- Download software and firmware updates
- Join support forums
- Find warranty and regulatory information

Make a copy

Copy a document or picture from the scanner glass or automatic document feeder.

View a video of how to make a copy using the touchscreen with a white background

1. Load the original print-side down on the scanner glass or print-side up in the automatic document feeder.
2. From the Home screen on the printer control panel, touch the Copy icon .
3. Touch the Document icon.
4. On the Document Copy menu, select the settings for your copy job.

   NOTE: For additional copy options, touch the Settings icon .

5. To adjust the number of copies, touch the box to the left of the Copy button and then enter the number of copies using the touch keypad. Touch the keypad icon to close the keypad.
6. Touch Copy to begin copying.

Copy on both sides (duplex)

The printer allows you to copy a two-sided document. You can select an automatic or manual method, depending on if you copy from a document feeder or from the scanner glass.

Copy on both sides automatically

Use the automatic document feeder to copy a two-sided document without manual intervention.

1. Load the original documents into the document feeder with the first page facing up, and with the top of the page leading.
2. Adjust the paper guides to fit the size of the document.
3. From the Home screen on the printer control panel, touch the Copy icon .
4. Touch the Document icon.
5. Touch 2-Sided, and then touch the option you want to use for your copy job.

   If you have two-sided originals, you can choose 2-1 sided to create single-sided copies, or 2-2 sided to create two-sided copies. If you have single-sided originals, you can choose 1-1 sided to create single-sided copies, or 1-2 sided to make two-sided copies.
6. Touch the Copy button to start copying.

Copy on both sides manually

Use the scanner to copy a two-sided document using a manual process. The printer prompts when to place and copy each page.

1. Place the document face-down on the scanner glass with the upper-left corner of the page in the upper-left corner of the glass, and then close the scanner lid.
2. From the Home screen on the printer control panel, touch the Copy icon .
3. Touch the Document icon.
4. Touch 2-Sided, and then touch the option you want to use for your copy job.

   You can choose 1-1 sided to make a single-sided copy from a single-sided original, or 1-2 sided to make single-sided copies from a two-sided original.
5. Touch the Copy button to start copying.
6. The printer prompts you to load the next original document. Place the next page on the glass, or turn the two-sided document over to copy the second side.
7. Touch the OK button.
8. Repeat this process until you have scanned the last page. Touch the keypad icon to finish printing the copies.

Copy an identification card

Use this feature to copy both sides of an identification card, or other small-sized documents, onto the same side of one sheet of paper. The printer prompts you to copy the first side, and then turn the card over to copy the other side.

1. Place the ID card onto the scanner glass, near the icon at the back left corner, and slightly away from the edges of the scanner glass.
2. Close the scanner lid.
3. From the Home screen on the printer control panel, touch the Copy icon .
4. Touch the ID Card icon.
5. Select the copy orientation and tray settings, and then touch Copy.
6. Follow the prompts on the control panel screen to copy the first side of the ID card and then turn the card over to copy the other side.

Additional copy tasks

Locate information on the Web for performing common copy tasks.

Go to www.hp.com/support/ljmfp4101-4104.

Instructions are available for copy tasks, such as the following:

- Copy or scan pages from books or other bound documents
- Copy mixed-size documents
- Copy or scan a document into a booklet format

6 Scan

Scan using the software, or scan directly to email, a USB flash drive, a network folder or another destination.

For more information:

The following information is correct at the time of publication. For current information, see www.hp.com/support/ljmfp4101-4104.

HP's all-inclusive help for the printer includes the following information:

- Install and configure
- Learn and use
- Solve problems
- Download software and firmware updates
- Join support forums
- Find warranty and regulatory information

Scan by using HP Scan software (Windows)

Use the HP Scan software to initiate scanning from software on your computer. You can save the scanned image as a file or send it to another software application.

1. Open the HP Printer Assistant.
   - **Windows 10**: From the **Start** menu, click **All Apps**, click **HP**, and then select the printer name.
   - **Windows 8.1**: Click the down arrow in lower left corner of the **Start** screen, and then select the printer name.
   - **Windows 8**: Right-click an empty area on the **Start** screen, click **All Apps** on the app bar, and then select the printer name.
   - **Windows 7**: From the computer desktop, click **Start**, select **All Programs**, click **HP**, click the folder for the printer, and then select the printer name.
2. In the HP Printer Assistant, select **Scan**, and then select **Scan a Document or Photo**.
3. Adjust the settings if necessary.
4. Click **Scan**.

Scan by using HP Easy Scan Software (macOS)

Use the HP Easy Scan software to initiate scanning from software on your computer.

1. Load the document in the document feeder or on the scanner glass according to the indicators on the printer.
2. From the computer, open **HP Easy Scan**, which is located in the **Applications** folder.
3. Follow the on-screen instructions to scan the document.
4. When you have scanned all the pages, click **File** and then **Save** to save them to a file.

Set up Scan to Email

The Scan to Email feature allows you to scan a document and send it directly to one or more email addresses. The printer must be connected to a network, and the Scan to Email feature must be set up by a network administrator before it can be used.

Introduction

There are two methods for configuring Scan to Email, the Scan to Email Setup Wizard (Windows), which is installed in the HP program group for the printer as part of the full software installation, and the Scan to Email Setup through the HP Embedded Web Server (EWS).

Before you begin

To set up the Scan to Email feature, the network administrator needs access to the printer and to SMTP information, including the server, port, and other authentication requirements. The printer must have an active network connection to the same network as the computer that will run the setup process.

Administrators need the following information before beginning the configuration process.

- Administrative access to the printer
- SMTP server (e.g., smtp.mycompany.com)

NOTE: If you do not know the SMTP server name, SMTP port number, or authentication information, contact the email/Internet service provider or system administrator for the information. SMTP server names and port names are typically easy to find by doing an Internet search. For example, use terms like "gmail smtp server name" or "yahoo smtp server name" to search.

- SMTP port number
- SMTP server authentication requirements for outgoing email messages, including the user name and password used for authentication, if applicable.

NOTE: Consult your email service provider's documentation for information on digital sending limits for your email account. Some providers may temporarily lock your account if you exceed your sending limit.

Method one: Use the Scan to Email Wizard (Windows)

Use the Scan to Email Wizard, available from the HP Printer Assistant application (Windows), to set up the Scan to Email feature.

Some operating systems do not support the Scan to Email Wizard.

1. Open the HP Printer Assistant.
   - **Windows 10**: From the **Start** menu, click **All Apps**, click **HP**, and then select the printer name.
   - **Windows 8.1**: Click the down arrow in lower left corner of the **Start** screen, and then select the printer name.
   - **Windows 8**: Right-click an empty area on the **Start** screen, click **All Apps** on the app bar, and then select the printer name.
   - **Windows 7**: From the computer desktop, click **Start**, select **All Programs**, click **HP**, click the folder for the printer, and then select the printer name.
2. In the HP Printer Assistant, select **Scan**, and then select **Scan to E-mail Wizard**.

NOTE: If the **Scan to E-mail Wizard** option is not available, use Method two: Set up the Scan to Email feature via the HP Embedded Web Server on page 59.

3. In the **Outgoing Email Profiles** dialog, click the **New** button. The **Scan to Email Setup** dialog opens.
4. On the **1. Start** page, enter the sender's email address in the **Email Address** field.
5. In the **Display Name** field, enter the sender's name. This is the name that will display on the printer control panel.
6. To require a PIN to be entered on the printer control panel before the printer can send an email, enter a 4-digit PIN in the **Security PIN** field, and then re-enter the PIN in the **Confirm Security PIN** field, and then click **Next**.

   HP recommends creating a PIN to secure the email profile. When a PIN is created, it must be entered on the printer control panel each time the profile is used to send a scan to email.
7. On the **2. Authenticate** page, enter the **SMTP Server** name and **SMTP Port** number.

NOTE: In most cases, the default port number does not need to be changed.

NOTE: If you are using a hosted SMTP service such as Gmail, verify the SMTP address, port number, and SSL settings from the service provider's website or other sources. Typically, for Gmail, the SMTP address is smtp.gmail.com, port number 465, and the SSL should be enabled.

Please refer to online sources to confirm these server settings are current and valid at the time of configuration.

8. If you are using Google™ Gmail for email service, select the **Always use secure connection (SSL/TLS)** check box.
9. Select the **Maximum Size of Email** from the drop-down menu.

   HP recommends using the default file size of **Automatic** for the maximum size.
10. If the SMTP server requires authentication to send an email, select the **Email Log-in Authentication** check box, enter the **User ID** and **Password**, and then click **Next**.
11. On the **3. Configure** page, to automatically copy the sender on email messages sent from the profile, select **Include sender in all email messages sent out successfully from the printer**, and then click **Next**.

12. On the **4. Finish** page, review the information and verify all the settings are correct. If there is an error, click the **Back** button to correct the error. If the settings are correct, click the **Save and Test** button to test the configuration.

13. When the **Congratulations** message displays, click **Finish** to complete the configuration.

14. The **Outgoing Email Profiles** dialog now shows the newly added sender email profile. Click **Close** to exit the wizard.

Method two: Set up the Scan to Email feature via the HP Embedded Web Server

Use the HP Embedded Web Server (EWS) to set up the Scan to Email feature. This method is available for all supported operating systems.

Step one: Access the HP Embedded Web Server (EWS)

Locate the printer's IP address and then enter it into a Web browser to access the EWS.

Your printer must be connected to an IP-based network before you can access the EWS.

1. From the Home screen on the printer control panel, touch the Wireless icon or the Ethernet icon to view the printer's IP address or host name.

2. Open a web browser, and in the address line, type the IP address or host name exactly as it displays on the printer control panel. Press the Enter key on the computer keyboard. The EWS opens.

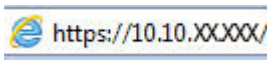

NOTE: If a message displays in the web browser indicating that the website might not be safe, select the option to continue to the website. Accessing this website will not harm the computer.

Step two: Configure the Scan to Email feature

Use the Embedded Web Server (EWS) to set up the Scan to Email feature. Define the email settings and the default scan and file options, and add contacts to the Address Book.

1. On the **Home** tab in the EWS, click **Scan to Email**.

2. On the **Outgoing Email Settings** page that appears, do the following:

   - If your organization uses one email server for all its emails: Set up your email addresses and the SMTP server information. Click **Apply**.

   - If your organization uses multiple email servers for its emails: Set up the email addresses, names, and security PINs for each email profile. Click **Apply**.

   After completing the email settings, the EWS displays the **Scan** tab.

3. On the **Scan** tab, click **Scan to Email**, and then click **Default Settings**. Select your default scan and file settings, and then click **Apply**.

4. Set up your contact list or lists. On the **Scan** tab, click **Address Book**.

   - A local address book can be set up on the device. Click **Contacts** to configure a local address book.

   - A Network Directory Server (LDAP) can be set up to search for users within a company. Click **Address Book Settings** to configure LDAP.

5. After setting up your contacts, click **Apply**.

Set up Scan to Network Folder

The Scan to Folder feature allows you to scan a document directly to network folder. The printer must be connected to a network, and the Scan to Folder feature must be set up by a network administrator before it can be used.

Introduction

There are two methods for configuring Scan to network folder, the Scan to Network Folder Wizard (Windows), which is installed in the HP program group for the printer as part of the full software installation, and the Network Folder Setup through the HP Embedded Web Server (EWS).

Before you begin

To set up the Scan to Folder feature, the network administrator needs access to the printer and information about the network path and destination folder. The printer must have an active network connection to the same network as the computer that will run the setup process.

Administrators need the following information before beginning the configuration process.

- Administrative access to the printer
- The network path of the destination folder (e.g., \\servername.us.companyname.net\scans)

NOTE: The network folder must be set up as a shared folder for the Scan to Network Folder feature to work.

Method one: Use the Scan to Network Folder Wizard (Windows)

Use the Scan to Network Folder Wizard, available from the HP Printer Assistant application (Windows), to set up the Scan to Network Folder feature.

Some operating systems do not support the Scan to Network Folder Wizard.

1. Open the HP Printer Assistant.
   - **Windows 10**: From the **Start** menu, click **All Apps**, click **HP**, and then select the printer name.
   - **Windows 8.1**: Click the down arrow in lower left corner of the **Start** screen, and then select the printer name.
   - **Windows 8**: Right-click an empty area on the **Start** screen, click **All Apps** on the app bar, and then select the printer name.
   - **Windows 7**: From the computer desktop, click **Start**, select **All Programs**, click **HP**, click the folder for the printer, and then select the printer name.
2. In the HP Printer Assistant, select **Scan**, and then select **Scan to Network Folder Wizard**.

   NOTE: If the **Scan to Network Folder Wizard** option is not available, use Method two: Set up the Scan to Network Folder feature via the HP Embedded Web Server on page 62.
3. In the **Network Folder Profiles** dialog, click the **New** button. The **Scan to Network Folder Setup** dialog opens.

4. On the **1. Start** page, enter the folder name in the **Display Name** field. This is the name that will display on the printer control panel.

5. Complete the **Destination Folder** field in one of the following ways:

   a. Enter the file path manually.

   b. Click the **Browse** button and navigate to the folder location.

   c. Complete the following task to create a shared folder:

      i. Click **Share Path**.

      ii. In the **Manage Network Shares** dialog, click **New**.

      iii. In the **Share Name** field, enter the name to display for the shared folder.

      iv. To complete the Folder Path field, click the **Browse** button, and then select one of the following options. Click **OK** when done.

         - Navigate to an existing folder on the computer.
         - Click **Make New Folder** to create a new folder.

      v. If the shared path needs a description, enter a description in the **Description** field.

      vi. In the **Share Type** field, select one of the following options, and then click **Apply**.

         - **Public**
         - **Private**

      NOTE: For security considerations, HP recommends selecting **Private** as the share type.

      vii. When a **The share was successfully created** message displays, click **OK**.

      viii. Select the check box for the destination folder, and then click **OK**.

6. To create a shortcut to the network folder on the computer desktop, select the **Create a Desktop shortcut to the network folder** check box.

7. To require a PIN to be entered on the printer control panel before the printer can send a scanned document to a network folder, enter a 4-digit PIN in the **Security PIN** field, and then re-enter the PIN in the **Confirm Security PIN** field. Click **Next**.

   HP recommends creating a PIN to secure the destination folder. When a PIN is created, it must be entered on the printer control panel each time a scan is sent to the network folder.

8. On the **2. Authenticate** page, enter the Windows **User Name** and Windows **Password** used to log in to the computer, and then click **Next**.

9. On the **3. Configure** page, select the default scan settings by completing the following task, and then click **Next**.

   a. From the **Document Type** drop-down, select the default file format for scanned files.

   b. From the **Color Preference** drop-down, select Black & White or Color.

   c. From the **Paper Size** drop-down, select the default paper size for scanned files.

d. From the **Quality Settings** drop-down, select the default resolution for scanned files.

NOTE: Higher resolution images have more dots per inch (dpi), so they show more detail. Lower resolution images have fewer dots per inch and show less detail, but the file size is smaller.

e. In the **Filename Prefix** field, enter a file name prefix (e.g., MyScan).

10. On the **4. Finish** page, review the information and verify all the settings are correct. If there is an error, click the **Back** button to correct the error. If the settings are correct, click the **Save and Test** button to test the configuration.

11. When the **Congratulations** message displays, click **Finish** to complete the configuration.

12. The **Network Folder Profiles** dialog now shows the newly added sender email profile. Click **Close** to exit the wizard.

Method two: Set up the Scan to Network Folder feature via the HP Embedded Web Server

Use the HP Embedded Web Server (EWS) to set up the Scan to Network Folder feature. This method is available for all supported operating systems.

Step one: Access the HP Embedded Web Server (EWS)

Locate the printer's IP address and then enter it into a Web browser to access the EWS.

Your printer must be connected to an IP-based network before you can access the EWS.

1. From the Home screen on the printer control panel, touch the Wireless icon or the Ethernet icon to view the printer's IP address or host name.

2. Open a web browser, and in the address line, type the IP address or host name exactly as it displays on the printer control panel. Press the Enter key on the computer keyboard. The EWS opens.

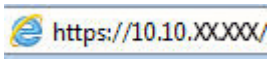

NOTE: If a message displays in the web browser indicating that the website might not be safe, select the option to continue to the website. Accessing this website will not harm the computer.

Step two: Configure the Scan to Network Folder feature

Use the Embedded Web Server (EWS) interface to set up the Scan to Folder feature.

1. On the **Settings** tab in the EWS, click **Control Panel Customization**, and then click **Quick Sets**.

2. Click + (Add), for **Type** select **Scan to Network Folder**, and follow the onscreen instructions for adding a Quick Set profile for a network folder. When finished, click **Next**.

3. In this page, follow the onscreen instructions for setting up the network folder, authentication requirements, and scan and file configurations. When finished, click **Apply**.

4. In the settings page, follow the onscreen instructions for configuring scan settings, such as paper size and scan resolution. When finished, click **Save**.

NOTE: You can change the default scan and file settings for future Scan to Network Folder Quick Sets. In the EWS, click the **Scan** tab, click **Scan to Network Folder**, and then click **Default Settings**.

Set up Scan to SharePoint

Learn how to set up the Scan to SharePoint feature in the Embedded Web Server (EWS) so you can scan and save files to a SharePoint site from the printer.

NOTE: Scan to SharePoint is not supported with SharePoint 365.

Step one: Access the HP Embedded Web Server (EWS)

Locate the printer's IP address and then enter it into a Web browser to access the EWS.

Your printer must be connected to an IP-based network before you can access the EWS.

1. From the Home screen on the printer control panel, touch the Wireless icon or the Ethernet icon to view the printer's IP address or host name.
2. Open a web browser, and in the address line, type the IP address or host name exactly as it displays on the printer control panel. Press the Enter key on the computer keyboard. The EWS opens.

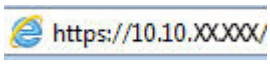

NOTE: If a message displays in the web browser indicating that the website might not be safe, select the option to continue to the website. Accessing this website will not harm the computer.

Step two: Set up Scan to SharePoint

Use the Embedded Web Server (EWS) interface to set up the Scan to SharePoint feature.

1. On the **Settings** tab, click **Control Panel Customization**, and then click **Quick Sets**.
2. Click + (Add), for **Type** select **Scan to SharePoint**, and follow the onscreen instructions for adding a Quick Set profile for the SharePoint destination. When finished, click **Next**.
3. In this page, follow the onscreen instructions for setting up the SharePoint destination, authentication requirements, and scan and file configurations. When finished, click **Apply**.

NOTE: You can change the default scan and file settings for future Scan to SharePoint Quick Sets. In the EWS, click the **Scan** tab, click **Scan to SharePoint**, and then click **Default Settings**.

Set up Scan to Computer (Windows)

Follow the procedure if this feature has been disabled, and you want to enable it.

This feature is available for Windows only.

IMPORTANT: For security purposes, scanning remotely is disabled by default. To enable this feature, in the Embedded Web Server, open the **Settings** tab, click **Security**, click **Administrator Settings**, select the **Enable** checkbox beside **Scan from a Computer or Mobile Device**, and then click **Apply**.

When this feature is enabled, anyone with access to the printer can scan whatever is on the scanner glass.

Enable scanning to a computer (Windows)

Use the HP Printer Assistant application to enable Scan to Computer if it has been disabled.

1. Open the HP Printer Assistant.
   - **Windows 10**: From the **Start** menu, click **All Apps**, click **HP**, and then select the printer name.
   - **Windows 8.1**: Click the down arrow in lower left corner of the **Start** screen, and then select the printer name.
   - **Windows 8**: Right-click an empty area on the **Start** screen, click **All Apps** on the app bar, and then select the printer name.
   - **Windows 7**: From the computer desktop, click **Start**, select **All Programs**, click **HP**, click the folder for the printer, and then select the printer name.
2. Go to the **Scan** section.
3. Select **Manage Scan to Computer**.
4. Click **Enable**.

Scan to a USB flash drive

Use the printer control panel to scan a file directly to a USB flash drive.

1. Place the document on the scanner glass or into the document feeder according to the indicators on the printer.
2. Insert the USB flash drive into the USB port on the front of the printer.

   A **Reading...** message displays on the printer control panel.
3. On the Memory Device Options screen, touch Scan To.
4. Select a file type from the Save As list.
5. Touch <Filename> and then use the keypad to assign a name to the scanned file. Touch Save .
6. If you want to preview the scan or change the scan options, do the following:
   - To preview the scan, touch the Preview icon or Touch to Preview (the scan preview option varies depending on the printer model).
   - For additional scan options, touch the Settings icon .
7. Touch Save .

Scan to email

Use the printer control panel to scan a file directly to an email address or contact list. The scanned file is sent to the address as an email message attachment.

In order to use this feature, the printer must be connected to a network and the Scan to Email feature must be configured by using the Scan to Email Setup Wizard (Windows) or the HP Embedded Web Server.

1. Load the document on the scanner glass or into the document feeder according to the indicators on the printer.
2. From the Home screen on the printer control panel, touch the Scan icon, and then touch E-mail.
3. If prompted, enter your login information in the Sign In screen.

   This will set the From (or sender) address to the email address associated with your login.
4. Enter the email recipient or recipients:
   - Touch Enter email address to enter an email address using the keypad. Touch Done.
   - Touch the Address Book icon to select an individual or group contact in an address book.
     a. Select the Address Book you want to use from the list, and enter the password if required.
     b. Select the individual or group contacts you want to send to.
     c. Touch Continue.
5. Touch Subject to add a subject line.
6. If you want to preview the scan or change the scan options, do the following:
   - To preview the scan, touch the Preview icon or Touch to Preview (the scan preview option varies depending on the printer model).
   - For additional scan options, touch the Settings icon .
7. Touch Send or Start Scan .

Scan to a network folder

Use the printer control panel to scan a document and save it to a folder on the network.

In order to use this feature, the printer must be connected to a network and the Scan to Network Folder feature must be configured by using the Scan to Network Folder Setup Wizard (Windows) or the HP Embedded Web Server.

1. Load the document on the scanner glass or into the document feeder according to the indicators on the printer.
2. From the Home screen on the printer control panel, touch the Scan icon, and then touch the Network Folder icon.
3. In the list of network folders, select the folder to which you want to save the document.
4. If prompted, enter the PIN.

5. Select a file type from the Save As list.
6. Touch <Filename> and use the keypad to assign a name to the scanned file. Touch Done.
7. If you want to preview the scan or change the scan options, do the following:
   - To preview the scan, touch the Preview icon or Touch to Preview (the scan preview option varies depending on the printer model).
   - For additional scan options, touch the Settings icon .
8. Touch Send or Start Scan .

Scan to SharePoint

Use the printer control panel to scan a document directly to a SharePoint site.

NOTE: Scan to SharePoint is not supported with SharePoint 365.

1. Load the document on the scanner glass or into the document feeder according to the indicators on the printer.
2. Touch the Scan icon, the SharePoint icon, and then select the SharePoint folder.
3. If prompted, enter the PIN.
4. Select a file type from the Save As list.
5. Touch <Filename> and use the keypad to assign a name to the scanned file. Touch Done.
6. If you want to preview the scan or change the scan options, do the following:
   - To preview the scan, touch the Preview icon or Touch to Preview (the scan preview option varies depending on the printer model).
   - For additional scan options, touch the Settings icon .
7. Touch Send or Start Scan .

Scan to a computer (Windows)

Use this feature to scan directly to a computer from the printer control panel.

This feature is available for Windows only.

Before scanning to a computer, make sure you have already installed the HP recommended printer software. The printer and computer must be connected and turned on. The printer software must be running before you scan.

1. Load the document on the scanner glass or into the document feeder according to the indicators on the printer.
2. From the Home screen on the control panel, touch the Scan icon.
3. Swipe right and then touch the Computer icon.

4. Select the computer you want to scan to.
5. Verify the Scan Shortcut is the option you want to use, or touch Scan Shortcut to select a different scan option.
6. If you are using the automatic document feeder (ADF) and your original is single-sided, touch the left side of the Original 2-sided slider to move it to the off position.
7. To select any additional scan options, touch the Settings icon ⚙.
8. Touch Send or Start Scan ◇.

Additional scan tasks

Locate information on the Web for performing common scan tasks.

Go to www.hp.com/support/ljmfp4101-4104.

Instructions are available for scan tasks, such as the following:

- How to scan a general photo or document
- How to scan as editable text (OCR)
- How to scan multiple pages into a single file

7 Fax

Configure the fax features, and send and receive faxes using the printer.

For more information:

The following information is correct at the time of publication. For current information, see www.hp.com/support/ljmfp4101-4104.

HP's all-inclusive help for the printer includes the following information:

- Install and configure
- Learn and use
- Solve problems
- Download software and firmware updates
- Join support forums
- Find warranty and regulatory information

Connect and configure the printer for fax

Before using the printer to fax, connect the printer to a telephone line and configure the fax settings.

Connect the printer to a telephone line

This printer is an analog fax device. HP recommends using the printer on a dedicated analog telephone line.

- Connect the telephone cable to the fax port on the printer and to the telephone jack on the wall.

NOTE: On some printers, the fax port might be above the phone port. Refer to the icons on the printer.

NOTE: Some countries/regions might require an adapter for the telephone cable that came with the printer.

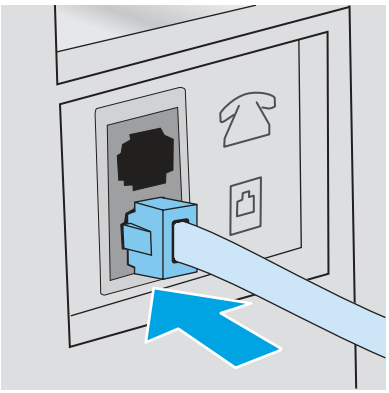

Configure the printer for fax

Use this information to configure the fax settings after the printer is connected to a phone line.

To begin, use one of the following methods:

- Configure the fax time, date and header using the HP Fax Setup Wizard on page 69 (recommended method)
- Configure the time, date, and header using the printer control panel on page 69
- Configure the time, date, and header using the HP Embedded Web Server and Printer Home Page (EWS) on page 70 (if the software is installed)

NOTE: In the United States and many other countries/regions, setting the time, date, and other fax header information is a legal requirement.

Configure the fax time, date and header using the HP Fax Setup Wizard

Configure the fax settings using the HP Fax Setup Wizard in Windows.

Access the Fax Setup Wizard after *initial* setup and software installation by following these steps.

NOTE: Some operating systems do not support the Fax Setup Wizard.

1. Open the HP Printer Assistant.
   - **Windows 10**: From the **Start** menu, click **All Apps**, click **HP**, and then select the printer name.
   - **Windows 8.1**: Click the down arrow in the lower left corner of the **Start** screen, and then select the printer name.
   - **Windows 8**: Right-click an empty area on the **Start** screen, click **All Apps** on the app bar, and then select the printer name.
   - **Windows 7**: From the computer desktop, click **Start**, select **All Programs**, click **HP**, click the folder for the printer, and then select the printer name.
2. In the HP Printer Assistant, select **Fax**, and then select **Fax Setup Wizard**.
3. Follow the on-screen instructions in the HP Fax Setup Wizard to configure the fax settings.

Configure the time, date, and header using the printer control panel

Change the fax settings using the printer control panel (after first-time setup using the Fax Setup Wizard).

1. From the Home screen on the printer control panel, swipe the tab at the top of the screen downward to open the Dashboard, and then touch the Setup icon ⚙.
2. Touch Preferences, and then touch Date and Time.
3. Touch Set the Date, swipe each column to set the month, day, and year, and then touch Done.
4. Touch Set the Time, swipe each column to set the hour, minute, and AM/PM setting, and then touch Done.
5. Touch the Back button ↩ to return to the Setup menu, and then scroll to and touch Fax Setup.

6. Touch Preferences, and then scroll to and touch Fax Header.

7. Enter your personal or company name using the touch keypad, and then touch Done.

NOTE: The maximum number of characters for the fax header is 25.

8. Enter your fax number using the touch keypad, and then touch Done.

NOTE: The maximum number of characters for the fax number is 20.

Configure the time, date, and header using the HP Embedded Web Server and Printer Home Page (EWS)

Configure the fax settings using the HP Embedded Web Server (EWS).

1. Access the EWS using one of the following methods:

   Access the EWS from the software:

   a. From the **Start** menu, select **HP**, and then select the printer name to open the HP Printer Assistant.

   b. In the HP Printer Assistant, select **Print**, and then select **Printer Home Page (EWS)**. The EWS opens.

   Access the EWS from a web browser:

   a. **Locate the printer's IP address**: From the Home screen on the printer control panel, touch the Wireless icon or the Ethernet icon to view the printer's IP address or host name.

   b. Open a web browser, and in the address line, type the IP address or host name exactly as it displays on the printer control panel. Press the Enter key on the computer keyboard. The EWS opens.

   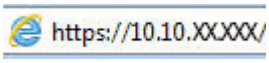

   NOTE: If a message displays in the web browser indicating that the website might not be safe, select the option to continue to the website. Accessing this website will not harm the computer.

2. On the EWS Home page, click the **Fax** tab.

3. Follow the on-screen instructions to configure the fax settings.

Configure for stand-alone fax

Configure the printer to use as a stand-alone fax machine without connecting it to a computer or a network.

1. From the Home screen on the printer control panel, swipe right and then touch the Fax icon.

2. Swipe right and touch the Setup icon, and then touch Setup Wizard.

3. Follow the on-screen instructions to configure the fax settings.

Configure for an answering machine

Follow these steps to set up the printer on a shared voice/fax line with an answering machine.

1. Disconnect any devices that are connected to the telephone jack.
2. Remove the plug from the telephone line out port on the rear of the printer.
3. Connect the telephone cable to the fax port on the printer and to the telephone jack on the wall.

NOTE: Some countries/regions might require an adapter for the telephone cable that came with the printer.

NOTE: On some printers, the fax port might be above the phone port. Refer to the icons on the printer.

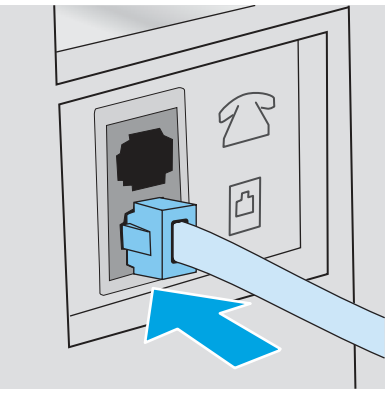

4. Connect the answering machine telephone cable to the telephone line out port on the rear of the printer.

NOTE: If you do not connect the answering machine directly to the printer, the answering machine might record fax tones from a sending fax machine and the printer might not receive faxes.

NOTE: If the answering machine does not have a built-in telephone, connect a telephone to the OUT port on the answering machine for convenience.

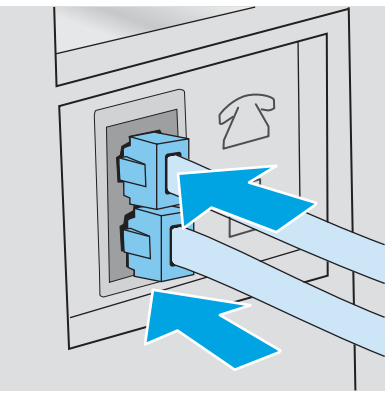

5. Configure the Rings to Answer setting on the printer:
   a. From the Home screen on the printer control panel, swipe the tab at the top of the screen downward to open the Dashboard, and then touch the Setup icon ⚙.

b. Scroll to and touch Fax Setup, and then touch Preferences.

c. Scroll to and touch Rings to Answer, select the number of rings, and then touch Done to return to the Preferences menu.

6. Configure the printer to answer fax calls automatically:

   - From the Preferences menu, touch Auto Answer to turn on the setting.

Install the HP Fax software in Windows (optional)

With the HP Fax software, you can fax electronic documents from a computer using the printer.

To use the HP Fax software, the following conditions are required:

- The printer is connected directly to the computer or to a network to which the computer is connected
- The printer software is installed on the computer
- The computer operating system is supported by the printer

NOTE: The HP Fax software that came with the printer is the only computer fax program that can be used with the printer. The printer is not compatible with fax software produced by other manufacturers.

Download from the Web: Go to www.hp.com/support, click **Software and Drivers**, and then follow the onscreen instructions to download the latest HP software.

When prompted by the software installer, make sure you select **HP Fax Software** as one of the software components to install.

Send a fax

Send a fax from the printer or a third-party software program. Learn how to use speed dials and group-dial entries.

Send a fax by dialing manually from the printer control panel

Send a fax manually using the printer control panel.

1. Load the document:

   - If you are loading an original on the scanner glass, place it face-down on the left rear corner of the glass.
   - If you are loading multiple pages in the document feeder, load the pages face-up and adjust the paper guides so they are snug against the paper.

   NOTE: If documents are in the document feeder and on the scanner glass at the same time, the printer processes the document in the document feeder and not the one on the scanner glass.

2. From the Home screen on the printer control panel, swipe right and then touch the Fax icon.
3. Touch Send Now.

4. Enter the fax number using the touch keypad.

NOTE: To use access codes, credit cards, or calling cards, you must dial the fax number manually to allow for pauses and dialing codes. To send a fax to an international destination, dial manually to allow for pauses and international dialing codes. You cannot use speed dials with access codes, credit cards, calling cards, or to dial international destinations.

5. Touch Send to send the fax.

NOTE: If you are faxing from the scanner glass and your document includes multiple pages, follow the control panel prompts to confirm and load additional pages.

Fax from the flatbed scanner

Fax a document using the scanner glass.

1. Place the document face-down on the scanner glass.

2. From the Home screen on the printer control panel, swipe right and then touch the Fax icon.
3. Touch Send Now.
4. Enter the fax number using the touch keypad, and then touch Send.

Fax from the document feeder

Fax a document using the document feeder.

1. Insert the originals into the document feeder face-up.

CAUTION: To prevent damage to the printer, do not use an original that contains correction tape, correction fluid, paper clips, or staples. Also, do not load photographs, small originals, or fragile originals into the document feeder.

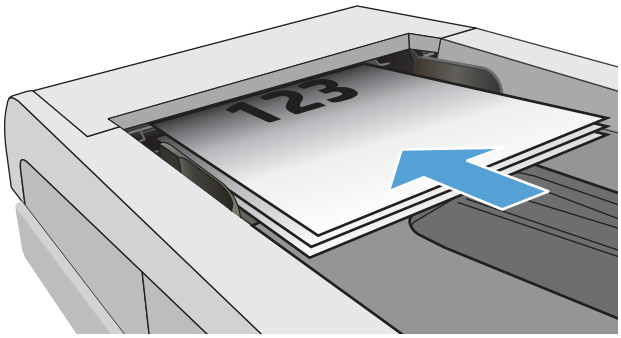

2. Adjust the paper guides until they are snug against the paper.

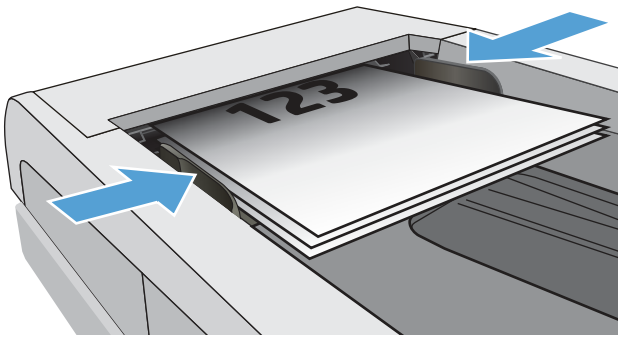

3. From the Home screen on the printer control panel, touch the Fax icon.
4. Touch Send Now.
5. Enter the fax number using the touch keypad, and then touch Send.

   The printer sends the fax.

Schedule a fax to be sent later

Use the printer control panel to schedule a fax to be automatically sent at a future time within the next 24 hours. When using this option, the printer scans the document into memory and then returns to a Ready state to fax the document at the specified time.

1. Load the document:
   - If you are loading an original on the scanner glass, place it face-down on the left rear corner of the glass.
   - If you are loading multiple pages in the document feeder, load the pages face-up and adjust the paper guides so they are snug against the paper.

   NOTE: If documents are in the document feeder and on the scanner glass at the same time, the printer processes the document in the document feeder and not the one on the scanner glass.

2. From the Home screen on the printer control panel, swipe right and then touch the Fax icon.
3. Touch Send Later.

4. Swipe the columns on the screen to set the hour and minute to the specific time you want to send the fax.

5. Enter the fax number using the touch keypad, and then touch Send.

   The printer will scan the document and save it in the printer's memory until the scheduled time, and then it will automatically send the fax at that time.

Use phone book entries

Send a fax to an individual or a group that has already been added to the phone book.

NOTE: Before you can send a fax using phone book entries, you must first add contacts to the phone book.

1. Load the document onto the scanner glass or into the document feeder.

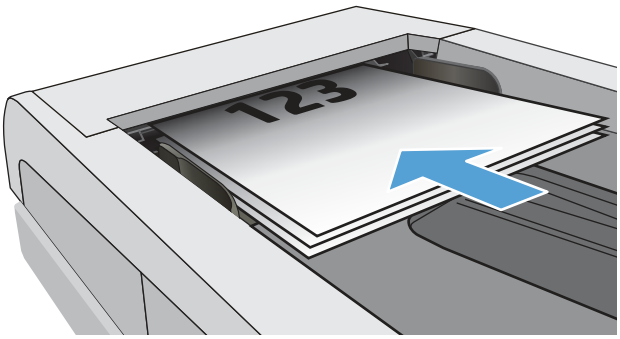

2. From the Home screen on the printer control panel, touch the Fax icon.

3. Touch Send Now.

4. Touch the Phone Book icon .

5. Touch the local phone book, touch the name of the individual or group entry that you want to use, and then touch Select.

6. Touch Send to send the fax.

Send a fax from the software (Windows)

Fax a document using the HP Fax software in Windows.

The procedure to send a fax varies according to your specifications. The most typical steps follow.

1. From the **Start** menu, select **HP**, and then select the printer name to open the HP Printer Assistant.

2. In the HP Printer Assistant, select **Fax**, and then select **Send Fax**.

   The fax software opens.

3. Enter the fax number of one or more recipients.

4. Place the document on the scanner glass or load it in the document feeder.

5. Click **Add Scan**.

6. Click **Send Now**.

Send a fax from a third-party software program, such as Microsoft Word

If you created a document using a third-party software program, such as Microsoft Word, you can fax the document directly from the software.

1. Open a document in a third-party program.
2. Click the **File** menu, and then click **Print**.
3. Select the fax print driver from the print driver drop-down list.

   The fax software opens.
4. Enter the fax number of one or more recipients.
5. Include any pages loaded at the printer. This step is optional.
6. Click **Send Now**.

Create, edit, and delete phone book entries

You can store frequently dialed fax numbers in the phone book as individual entries, or a group of entries.

Create and edit individual phone-book entries

Add new individual entries to the phone book, or edit existing entries.

1. From the Home screen on the printer control panel, swipe right and then touch the Fax icon.
2. Swipe right and then touch the Phone Book icon.
3. Touch Local Phone Book, and then proceed with one of the following options:
   - **Add a new contact**: Touch the Add Contact icon .
   - **Edit an existing contact**: Touch the name of the contact in the list.
4. Touch Name, enter (or edit) the name of the contact using the touch keypad, and then touch Done.
5. Touch Fax Number, enter (or edit) the fax number using the touch keypad, and then touch Done.
6. Touch Add to save a new contact, or touch Done to save the changes you made to an existing contact.

Create and edit group phone-book entries

Create or edit group entries in the address book.

1. From the Home screen on the printer control panel, swipe right and then touch the Fax icon.
2. Swipe right and then touch the Phone Book icon.
3. Touch Local Phone Book.

4. Touch the Phone Book icon , and then touch the Group icon .

NOTE: To edit an existing group, touch the name of the group and then make the changes in the Edit Group menu.

5. Touch Add New Group .

6. Touch Name, enter a name for the group using the touch keypad, and then touch Done.

7. Touch Number of Members, touch the names of the contacts that you want to add to the group, and then touch Select.

8. Touch Create to save the new group.

Delete phone book entries

Delete entries from the phone book.

1. From the Home screen on the printer control panel, swipe right and then touch the Fax icon.

2. Swipe right and then touch the Phone Book icon.

3. Touch Local Phone Book, and then scroll to and touch the name of the contact or group that you want to delete.

4. On the Edit Contact or Edit Group screen, touch Delete, and then touch Yes to confirm that you want to delete the contact.

Reprint a received fax from the printer memory

Received faxes that are not printed are stored in the printer's memory. Reprint a received fax that is stored in the memory.

NOTE: After the memory becomes full, the printer cannot receive a new fax until you print or delete the faxes from memory. You might also want to delete the faxes in memory for security or privacy purposes.

1. Make sure paper is loaded in the main paper tray.

2. From the Home screen on the printer control panel, swipe right and then touch the Fax icon.

3. Touch Reprint.

4. Scroll to and touch the name of the received fax that you want to print, and then touch Print.

Additional fax tasks

Locate information on the Web for performing common fax tasks.

Go to www.hp.com/support/ljmfp4101-4104.

Instructions are available for fax tasks, such as the following:

- Create and manage fax speed dial lists

- Configure fax billing codes
- Use a fax printing schedule
- Block incoming faxes
- Fax archiving and forwarding

8 Manage the printer

Utilize management tools, security and energy-conservation settings, and firmware updates for the printer.

For more information:

The following information is correct at the time of publication. For current information, see www.hp.com/support/ljmfp4101-4104.

HP's all-inclusive help for the printer includes the following information:

- Install and configure
- Learn and use
- Solve problems
- Download software and firmware updates
- Join support forums
- Find warranty and regulatory information

Use HP Web Services applications

With Web Services, you can add print apps to your printer using HP Connected. Print apps is a content-on-demand delivery platform that allows you to browse and view popular web destinations and print in an easy-to-read format.

1. From the Home screen on the printer control panel, swipe right and then touch Apps.
2. Touch the print app that you want to use.

   For more information about individual print apps and to create an account, visit HP Connected. With an HP Connected account, you can add, configure, or remove print apps, and set the order in which the apps appear on your printer control panel.

NOTE: The HP Connected website might not be available in all countries/regions.

NOTE: You can also turn off print apps using the EWS. To do so, open the EWS (see Open the Embedded Web Server), click the **Settings** tab, click **Security** and then click **Administrator Settings**. Disable the **Only Print Apps** option.

Change the printer connection type (Windows)

If you are already using the printer and you wish to change the way it is connected, use **Device Setup & Software** to change the connection. For example, connect the new printer to the computer using a USB or network connection, or change the connection from a USB to a wireless connection.

To open **Device Setup & Software**, complete the following procedure:

1. From the **Start** menu, select **HP**, and then select the printer name to open the HP Printer Assistant.
2. In the HP Printer Assistant, select **Tools** from the navigation bar, and then select **Device Setup & Software**.

Advanced configuration with HP Embedded Web Server and Printer Home Page (EWS)

Use the HP Embedded Web Server to manage printing functions from your computer instead of the printer control panel.

- View printer status information
- Determine the remaining life for all supplies and order new ones
- View and change tray configurations (paper types and sizes)
- View and print internal pages
- View and change network configuration

The HP Embedded Web Server works when the printer is connected to an IP-based network. The HP Embedded Web Server does not support IPX-based printer connections. You do not have to have Internet access to open and use the HP Embedded Web Server.

When the printer is connected to the network, the HP Embedded Web Server is automatically available.

NOTE: Printer Home Page (EWS) is software used to connect to the HP Embedded Web Server when the printer is connected to a computer via USB. It is available only if a full installation was performed when the printer was installed on a computer. Depending on how the printer is connected, some features might not be available.

NOTE: The HP Embedded Web Server is not accessible beyond the network firewall.

Method one: Open the HP Embedded Web Server (EWS) from the software

Use this method to open the EWS from the HP Printer Assistant software.

1. From the **Start** menu, select **HP**, and then select the printer name to open the HP Printer Assistant.
2. In the HP Printer Assistant, select **Print**, and then select **Printer Home Page (EWS)**.

Method two: Open the HP Embedded Web Server (EWS) from a web browser

Use the EWS to manage your printer from a computer instead of the printer control panel.

Your printer must be connected to an IP-based network before you can access the EWS.

1. From the Home screen on the printer control panel, touch the Wireless icon or the Ethernet icon to view the printer's IP address or host name.
2. Open a web browser, and in the address line, type the IP address or host name exactly as it displays on the printer control panel. Press the Enter key on the computer keyboard. The EWS opens.

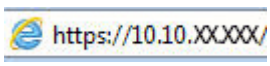

NOTE: If a message displays in the web browser indicating that the website might not be safe, select the option to continue to the website. Accessing this website will not harm the computer.

Table 8-1 HP Embedded Web Server tabs

Tab or section	Description
Home tab Provides printer, status, and configuration information.	• **Scan to Email**: Scan documents and send them as email attachments. • **HP Digital Fax**: Configure the printer to save faxes to a network folder or to forward faxes to an email address. • **Sleep Mode**: Configure the Sleep Mode settings. • **Web Services**: Set up and manage Web Services such as HP ePrint and Print Apps. • **Printer Update**: Check for new printer updates. • **Estimated Cartridge Levels**: View the status of the cartridges and the estimated cartridge levels. • **Network Summary**: View a summary of the printer's network settings. • **Print Quality Toolbox**: Use maintenance tools to improve the print quality of your printouts. • **Personalize** button: Add or remove features that display on the Home tab.
Scan tab (MFP models only)	• **Scan to Computer** • **Scan to Email** • **Scan to Network Folder** • **Scan to Sharepoint** • **Scan to USB** • **Address Book**
Copy/Print tab Provides the ability to change default copy and print settings from your computer.	• **Copy** • **Print**
Fax tab (Fax models only)	• **Settings** • **Information** • **HP Digital Fax**
Web Services tab	• **Web Services Settings**

Table 8-1 HP Embedded Web Server tabs (continued)

Tab or section	Description
Network tab (Network-connected printers only) Provides the ability to change network settings from your computer.	• **General** • **Wired (802.3)** • **Wireless (802.11)** (wireless models only) • **Wi-Fi Direct** (wireless models only) • **Bluetooth Low Energy** (wireless models only) • **AirPrint** • **Google Cloud Print** • **Internet Printing Protocol** • **Security** • **Advanced Settings**
Tools tab	• **Product Information** • **Reports** • **Utilities** • **Backup and Restore** • **Printer Restart** • **Printer Updates**
Settings tab	• **Power Management** • **Preferences** • **Supplies** • **Control Panel Customization** • **Security** • **Email Alerts** • **Restore Defaults** • **Firewall**

Configure IP network settings

Review the following information about configuring IP network settings.

Introduction

Use the information in the following sections to configure the printer network settings.

Printer sharing disclaimer

HP does not support peer-to-peer networking, as the feature is a function of Microsoft operating systems and not of the HP printer drivers.

Go to Microsoft at www.microsoft.com.

View or change network settings

Use the HP Embedded Web Server to view or change IP configuration settings.

1. Open the HP Embedded Web Server (EWS):

   a. From the Home screen on the printer control panel, touch the Wireless icon or the Ethernet icon to view the printer's IP address or host name.

   b. Open a web browser, and in the address line, type the IP address or host name exactly as it displays on the printer control panel. Press the Enter key on the computer keyboard. The EWS opens.

   https://10.10.XXXXX/

   NOTE: If a message displays in the web browser indicating that the website might not be safe, select the option to continue to the website. Accessing this website will not harm the computer.

2. On the EWS Home page, click the **Network** tab to view network information. Change settings as needed.

Rename the printer on a network

Use the HP Embedded Web Server (EWS) to rename the printer on a network so it can be uniquely identified.

1. Open the HP Embedded Web Server (EWS):

   a. From the Home screen on the printer control panel, touch the Wireless icon or the Ethernet icon to view the printer's IP address or host name.

   b. Open a web browser, and in the address line, type the IP address or host name exactly as it displays on the printer control panel. Press the Enter key on the computer keyboard. The EWS opens.

   https://10.10.XXXXX/

   NOTE: If a message displays in the web browser indicating that the website might not be safe, select the option to continue to the website. Accessing this website will not harm the computer.

2. On the EWS Home page, click the **Network** tab.

3. In the left navigation pane, click **General** to expand the options, and then click **Network Identification**.

4. In the **Host Name** text field, enter a name to uniquely identify this printer, and then click **Apply** to save the changes.

Manually configure IPv4 TCP/IP parameters from the control panel

Use the control-panel menus to manually set the IPv4 address, subnet mask, and default gateway.

1. From the Home screen on the printer control panel, swipe the tab at the top of the screen downward to open the Dashboard, and then touch the Setup icon ⚙.
2. Touch Network Setup, and then scroll to and touch one of the following menus:
   - Ethernet Settings (for a wired network)
   - Wireless Settings (for a wireless network)
3. Touch IP Settings.
4. Touch Manual, and then touch IP Address.
5. Touch each of the following menu items and then use the touch keypad to enter the information:
   - IP Address
   - Subnet Mask
   - Default Gateway
6. Touch Apply to save the settings.

Link speed and duplex settings

The link speed and communication mode of the print server must match the network hub. For most situations, leave the printer in automatic mode. Incorrect changes to the link speed and duplex settings might prevent the printer from communicating with other network devices. If you need to make changes, use the printer control panel.

NOTE: This information applies only to Ethernet (wired) networks. It does not apply to wireless networks.

NOTE: The printer setting must match the setting for the network device (a network hub, switch, gateway, router, or computer).

NOTE: Making changes to these settings causes the printer to turn off and then on. Make changes only when the printer is idle.

1. From the Home screen on the printer control panel, swipe the tab at the top of the screen downward to open the Dashboard, and then touch the Setup icon Setup icon ⚙.
2. Touch Network Setup.
3. Touch Ethernet Settings, and then touch Link Speed.
4. Select one of the following options:

Setting	Description
Automatic	The print server automatically configures itself for the highest link speed and communication mode allowed on the network.
10T Full	10 Mbps, full-duplex operation
10T Half	10 Mbps, half-duplex operation
100TX Full	100 Mbps, full-duplex operation
100TX Half	100 Mbps, half-duplex operation

Setting	Description
1000T Full	1000 Mbps, full-duplex operation

After making a change to the setting, the printer turns off and then on.

Printer security features

Review the following information about the printer security features.

Introduction

The printer includes several security features to restrict who has access to configuration settings, to secure data, and to prevent access to valuable hardware components.

Assign or change the system password using the Embedded Web Server

Assign an administrator password for access to the printer and the HP Embedded Web Server so that unauthorized users cannot change the printer settings.

1. Open the HP Embedded Web Server (EWS):

   a. From the Home screen on the printer control panel, touch the Wireless icon or the Ethernet icon to view the printer's IP address or host name.

   b. Open a web browser, and in the address line, type the IP address or host name exactly as it displays on the printer control panel. Press the Enter key on the computer keyboard. The EWS opens.

   https://10.10.XXXXX/

   NOTE: If a message displays in the web browser indicating that the website might not be safe, select the option to continue to the website. Accessing this website will not harm the computer.

2. On the EWS Home page, click the **Settings** tab.
3. In the left navigation pane, click **Security** to expand the options, and then click **Password Settings**.
4. Enter a password.
5. Re-enter the password in the **Confirm Password** field, and then click **Apply**.

NOTE: Make note of the password and store it in a safe place.

Energy-conservation settings

Learn about the energy-conservation settings that are available on your printer.

Introduction

The printer includes several economy features to conserve energy and supplies.

Print with EconoMode

This printer has an EconoMode option for printing drafts of documents. Using EconoMode can use less toner. However, using EconoMode can also reduce print quality.

HP does not recommend the full-time use of EconoMode. If EconoMode is used full-time, the toner supply might outlast the mechanical parts in the toner cartridge. If print quality begins to degrade and is no longer acceptable, consider replacing the toner cartridge.

NOTE: If this option is not available in your print driver, you can set it using the HP Embedded Web Server.

1. From the software program, select the **Print** option.
2. Select the printer, and then click the **Properties** or **Preferences** button.
3. Click the **Paper/Quality** tab.
4. Click the drop-down menu in the **Print Quality** section, and then select **EconoMode**.
5. Click **OK** to save the change.

Set the Sleep Mode setting

Use the control panel menus to specify the amount of time the printer must be inactive before it goes into sleep mode.

1. From the Home screen on the printer control panel, swipe the tab at the top of the screen downward to open the Dashboard, and then touch the Setup icon ⚙.
2. Scroll to and open the following menus:
   a. Power Management
   b. Sleep Mode
3. Touch an option to specify the amount of time the printer must be inactive before it goes into sleep mode.

Set the Shutdown Mode setting

Use the control panel menus to specify the amount of time the printer must be inactive before it shuts down.

NOTE: After the printer shuts down, the power consumption is 1 watt or less.

1. From the Home screen on the printer control panel, swipe the tab at the top of the screen downward to open the Dashboard, and then touch the Setup icon ⚙.
2. Scroll to and open the following menus:
   a. Power Management
   b. Shutdown Mode
3. Touch an option to specify the amount of time the printer must be inactive before it shuts down.

Set the Disable Shutdown setting

Use the control panel menus to disable the printer from shutting down after a period of inactivity.

1. From the Home screen on the printer control panel, swipe the tab at the top of the screen downward to open the Dashboard, and then touch the Setup icon ⚙.
2. Scroll to and open the following menus:
   a. Power Management
   b. Disable Shutdown
3. Touch one of the following options:
   - When ports are active: The printer will not shut down unless all ports are inactive. An active network link or fax connection will prevent the printer from shutting down.
   - Do not disable: The printer will shut down after a period of inactivity as determined by the Shutdown Mode setting.

NOTE: The default setting is When ports are active.

HP Web Jetadmin

HP Web Jetadmin is an award-winning, industry-leading tool for efficiently managing a wide variety of networked HP products, including printers, multifunction printers, and digital senders. This single solution allows you to remotely install, monitor, maintain, troubleshoot, and secure your printing and imaging environment – ultimately increasing business productivity by helping you save time, control costs, and protect your investment.

HP Web Jetadmin upgrades are periodically made available to provide support for specific product features. Go to www.hp.com/go/webjetadmin for more information.

Dynamic Security Enabled Printers

This printer is intended to work only with cartridges that have a new or reused HP chip. A reused HP chip enables the use of reused, remanufactured, and refilled cartridges.

The printer uses dynamic security measures to block cartridges using a non-HP chip. Periodic firmware updates delivered over the internet will maintain the effectiveness of the dynamic security measures and block cartridges that previously worked.

Updates can improve, enhance, or extend the printer's functionality and features, protect against security threats, and serve other purposes, but these updates can also block cartridges using a non-HP chip from working in the printer, including cartridges that work today. Unless you are enrolled in certain HP programs such as Instant Ink or use other services that require automatic online firmware updates, most HP printers can be configured to receive updates either automatically or with a notification that allows you to choose whether to update or not. For more information on dynamic security and how to configure online firmware updates, please go to www.hp.com/learn/ds.

Update the firmware

HP offers periodic printer updates, new Web Services apps, and new features to existing Web Services apps. Follow these steps to update the printer firmware for a single printer. When you update the firmware, Web Service apps will update automatically.

There are two supported methods to perform a firmware update on this printer. Use only one of the following methods to update the printer firmware.

Method one: Update the firmware using the control panel

Follow these steps to update the firmware using the printer control panel (for network-connected printers only), and/or set the printer to install future firmware updates automatically. For USB-connected printers, skip to Method two.

1. Make sure the printer is connected to a wired (Ethernet) or wireless network with an active Internet connection.

   NOTE: The printer must be connected to the internet to update the firmware via a network connection.

2. From the Home screen on the printer control panel, swipe the tab at the top of the screen downward to open the Dashboard, and then touch the Setup icon ⚙.

3. Scroll to and touch Printer Maintenance, and then touch Update the Printer.

   NOTE: If the Update the Printer option is not listed, use Method two.

4. Touch Check for Printer Updates Now to check for updates.

   NOTE: The printer automatically checks for an update, and if a newer version is detected, the update process starts automatically.

5. Set the printer to automatically update the firmware when updates become available:

   a. From the Home screen on the printer control panel, swipe the tab at the top of the screen downward to open the Dashboard, and then touch the Setup icon ⚙.

   b. Scroll to and touch Printer Maintenance, and then touch Update the Printer.

   c. Touch Manage Updates, touch Allow Updates, and then touch Yes.

   d. Touch the Back button ↩, touch Printer Update Options, and then touch Install Automatically (Recommended).

Method two: Update the firmware using the HP Printer Update utility

Follow these steps to manually download and install the HP Printer Update utility.

NOTE: This method is the only firmware update option available for printers connected to the computer via a USB cable. This method also works for printers that are connected to a network.

NOTE: You must have a print driver installed in order to use this method.

1. Go to support.hp.com, click **Software and Drivers**, and then click **Printer**.

2. In the text field, type the printer name, click **Submit**, and then click your printer model from the list of search results.
3. In the **Firmware** section, locate the **Firmware Update** file.
4. Click **Download**, and then click **Run**.
5. When the HP Printer Update utility launches, select the printer that you wish to update, and then click **Update**.
6. Follow the on-screen instructions to complete the installation, and then click the **OK** button to close the utility.

9 Solve problems

Troubleshoot problems with the printer. Locate additional resources for help and technical support.

The following information is correct at the time of publication. For current information, see www.hp.com/support/ljmfp4101-4104.

For more information:

HP's all-inclusive help for the printer includes the following information:

- Install and configure
- Learn and use
- Solve problems
- Download software and firmware updates
- Join support forums
- Find warranty and regulatory information

Customer support

Find support contact options for your HP printer.

Table 9-1 HP support options

Support option	Contact information
Get telephone support for your country/region Have the printer name, serial number, date of purchase, and problem description ready	Country/region phone numbers are on the flyer that was in the box with the printer or at support.hp.com.
Get 24-hour Internet support, and download software utilities and drivers	www.hp.com/support/ljmfp4101-4104
Order additional HP service or maintenance agreements	www.hp.com/go/carepack
Register the printer	www.register.hp.com

Control panel help system

The printer has a built-in Help system that explains how to use each screen.

To open the Help system, touch the Help icon ? in the lower-right corner of the screen.

Tips for using the online Help:

- For some screens, the Help opens to a global menu where you can search for specific topics. You can browse through the menu structure by touching the buttons in the menu.
- Some Help screens include animations that guide you through procedures, such as clearing jams.

- For screens that contain settings for individual jobs, the Help opens to a topic that explains the options for that screen.
- If the printer alerts you of an error or warning, touch the Help icon ? to open a message that describes the problem. The message also contains instructions to help solve the problem.

Restore the factory-set defaults

Restoring the factory-set defaults returns all of the printer and network settings to the factory defaults. It will not reset the page count, or tray size.

To restore the printer to the factory-default settings, follow these steps.

⚠ CAUTION: Restoring the factory-set defaults returns all of the settings to the factory defaults, and it also deletes any pages that are stored in the memory.

1. From the Home screen on the printer control panel, swipe the tab at the top of the screen downward to open the Dashboard, and then touch the Setup icon ⚙.
2. Scroll to and open the following menus:
   a. Printer Maintenance
   b. Restore
   c. Restore Factory Defaults

   The printer automatically restarts.

A “Cartridge is low” or “Cartridge is very low” message displays on the printer control panel

Understand the cartridge-related messages on the control panel and what actions to take.

Cartridge is low: The printer indicates when a toner cartridge level is low. Actual toner cartridge life remaining may vary. Consider having a replacement available to install when print quality is no longer acceptable. The toner cartridge does not need to be replaced now.

Continue printing with the current cartridge until redistributing the toner no longer yields acceptable print quality. To redistribute the toner, remove the toner cartridge from the printer and gently rock the cartridge back and forth end to end. Reinsert the toner cartridge into the printer and close the cover.

Cartridge is very low: The printer indicates when the toner cartridge level is very low. Actual toner cartridge life remaining may vary. To extend the life of the toner, gently rock the cartridges back and forth end to end. Consider having a replacement available to install when print quality is no longer acceptable. The toner cartridge does not need to be replaced now unless the print quality is no longer acceptable.

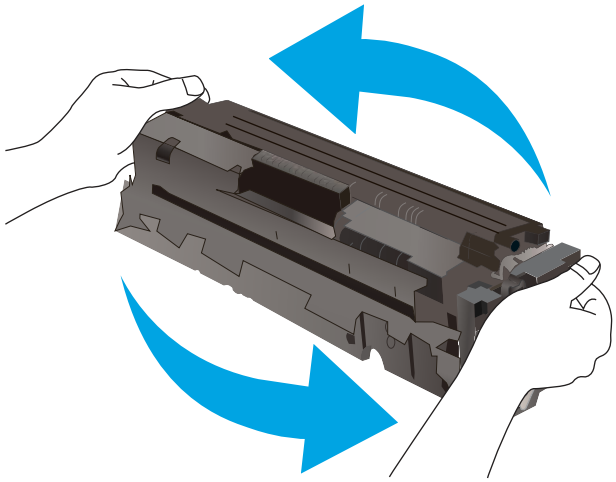

HP's Premium Protection Warranty expires when a message indicating that HP's Premium Protection Warranty on this supply has ended appears on the Supplies Status Page or the EWS.

Change the "Very Low" settings

You can change the way the printer reacts when supplies reach the Very Low state. You do not have to re-establish these settings when you install a new toner cartridge.

Change the "Very Low" settings from the control panel

Determine how the printer will notify you about very low cartridge levels.

1. From the Home screen on the printer control panel, swipe the tab at the top of the screen downward to open the Dashboard, and then touch the Setup icon ⚙.
2. Scroll to and open the following menus:
   - Supply Settings
   - Black Cartridge
   - Very Low Setting
3. Select one of the following options:
   - Select the Stop option to set the printer to stop printing until you replace the toner cartridge.
   - Select the Prompt option to set the printer to stop printing and prompt you to replace the toner cartridge. You can acknowledge the prompt and continue printing.
   - Select the Continue option to set the printer to alert you that the toner cartridge is very low, but to continue printing.

NOTE: The Low Threshold option allows you to define the level of ink that is considered very low.

For printers with fax capability

When the printer is set to the Stop or Prompt option, there is some risk that faxes will not print when the printer resumes printing. This can occur if the printer has received more faxes than the memory can hold while the printer is waiting.

The printer can print faxes without interruption when it passes the Very Low threshold if you select the Continue option for the toner cartridge, but print quality might degrade.

Order supplies

Order supplies and paper for your HP printer.

Table 9-2 **Options for ordering supplies**

Ordering options	Contact information
Order supplies and paper	www.hp.com/go/suresupply
Order through service or support providers	Contact an HP-authorized service or support provider.
Order using the HP Embedded Web Server (EWS)	To access, in a supported web browser on your computer, enter the printer IP address or host name in the address/URL field. The EWS contains a link to the HP SureSupply website, which provides options for purchasing Original HP supplies.

Printer does not pick up paper or misfeeds

Review the following information about the printer not picking up paper or misfeeding paper.

Introduction

The following solutions can help solve problems if the printer is not picking up paper from the tray or is picking up multiple sheets of paper at one time. Either of these situations can result in paper jams.

The printer picks up multiple sheets of paper

If the printer picks up multiple sheets of paper from the tray, try these solutions.

1. Remove the stack of paper from the tray and flex it, rotate it 180 degrees, and flip it over. *Do not fan the paper.* Return the stack of paper to the tray.

NOTE: Fanning the paper introduces static electricity. Instead of fanning the paper, flex the stack by holding it at each end and bringing the ends up to form a U shape. Then, rotate the ends down to reverse the U shape. Next, hold each side of the stack of paper, and repeat this process. This process releases individual sheets without introducing static electricity. Straighten the paper stack against a table before returning it to the tray.

Figure 9-1 Technique for flexing the paper stack

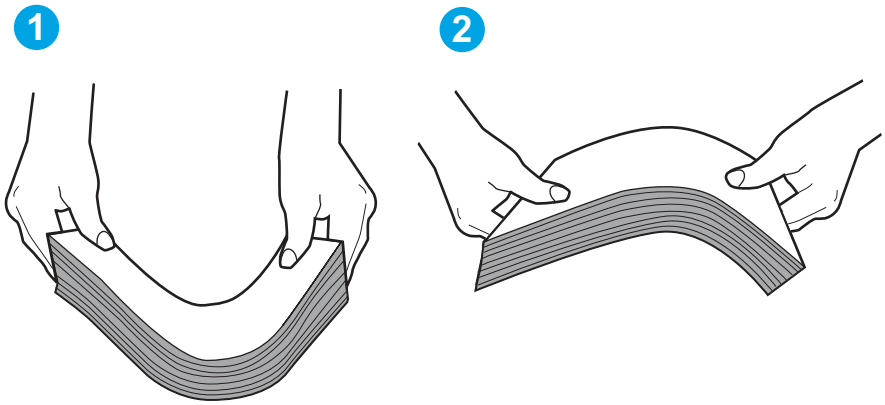

2. Use only paper that meets HP specifications for this printer.
3. Verify that the humidity in the room is within specifications for this printer, and that paper is being stored in unopened packages. Most reams of paper are sold in moisture-proof wrapping to keep paper dry.

   In high-humidity environments, paper at the top of the stack in the tray can absorb moisture, and it might have a wavy or uneven appearance. If this happens, remove the top 5 to 10 sheets of paper from the stack.

   In low-humidity environments, excess static electricity can cause sheets of paper to stick together. If this happens, remove the paper from the tray, and flex the stack as described above.
4. Use paper that is not wrinkled, folded, or damaged. If necessary, use paper from a different package.
5. Make sure the tray is not overfilled by checking the stack-height markings inside the tray. If it is overfilled, remove the entire stack of paper from the tray, straighten the stack, and then return some of the paper to the tray.

   The following images show examples of the stack-height markings in the trays for various printers. Most HP printers have markings similar to these. Also make sure that all sheets of paper are below the tabs near the stack-height marks. These tabs help hold the paper in the correct position as it enters the printer.

Figure 9-2 Stack height markings

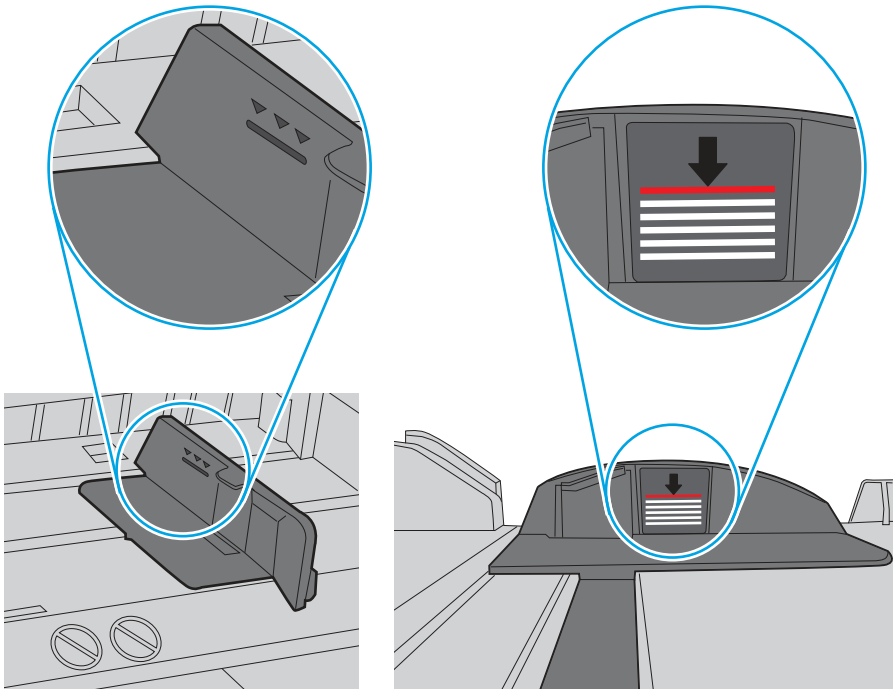

Figure 9-3 Tab for the paper stack

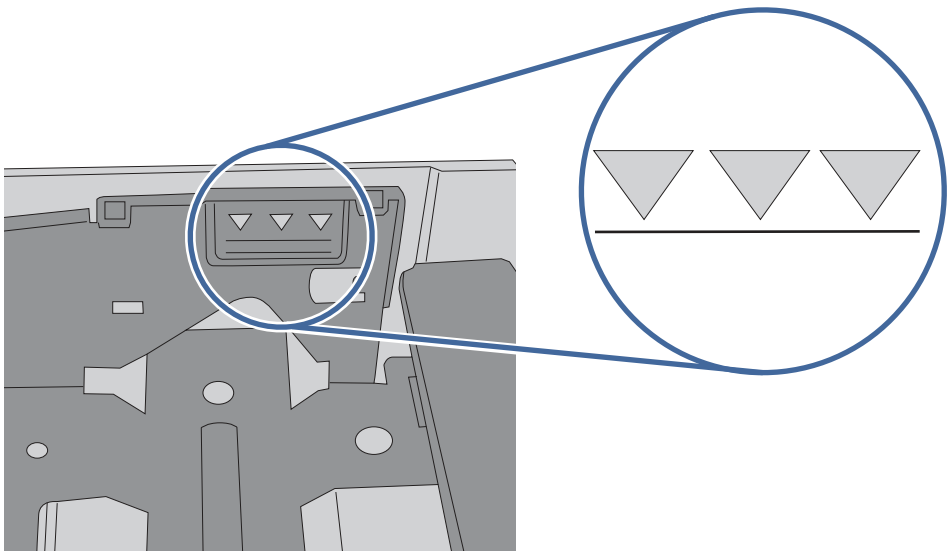

6. Make sure the paper guides in the tray are adjusted correctly for the size of paper. Adjust the guides to the appropriate indentation in the tray.

7. Make sure the printing environment is within recommended specifications.

The printer does not pick up paper

If the printer does not pick up paper from the tray, try these solutions.

1. Open the printer and remove any jammed sheets of paper. Verify that no torn remnants of paper remain inside of the printer.

2. Load the tray with the correct size of paper for the job.

3. Make sure the paper size and type are set correctly on the printer control panel.

4. Make sure the paper guides in the tray are adjusted correctly for the size of paper. Adjust the guides to the appropriate indentation in the tray. The arrow on the tray guide should line up exactly with the marking on the tray.

NOTE: Do not adjust the paper guides tightly against the paper stack. Adjust them to the indentations or markings in the tray.

The following image shows examples of the paper-size indentations in the trays. Most HP printers have markings similar to these.

Figure 9-4 Examples of size markings

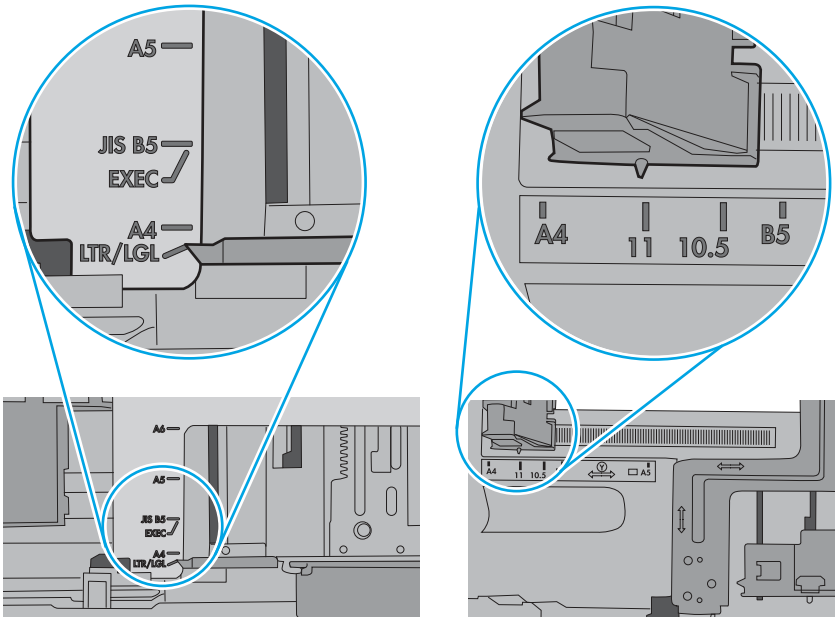

5. Verify that the humidity in the room is within specifications for this printer, and that paper is being stored in unopened packages. Most reams of paper are sold in moisture-proof wrapping to keep paper dry.

   In high-humidity environments, paper at the top of the stack in the tray can absorb moisture, and it might have a wavy or uneven appearance. If this happens, remove the top 5 to 10 sheets of paper from the stack.

   In low-humidity environments, excess static electricity can cause sheets of paper to stick together. If this happens, remove the paper from the tray, and flex the stack by holding it at each end and bringing the ends up to form a U shape. Then, rotate the ends down to reverse the U shape. Next, hold each side of the stack of paper, and repeat this process. This process releases individual sheets without introducing static electricity. Straighten the paper stack against a table before returning it to the tray.

Figure 9-5 Technique for flexing the paper stack

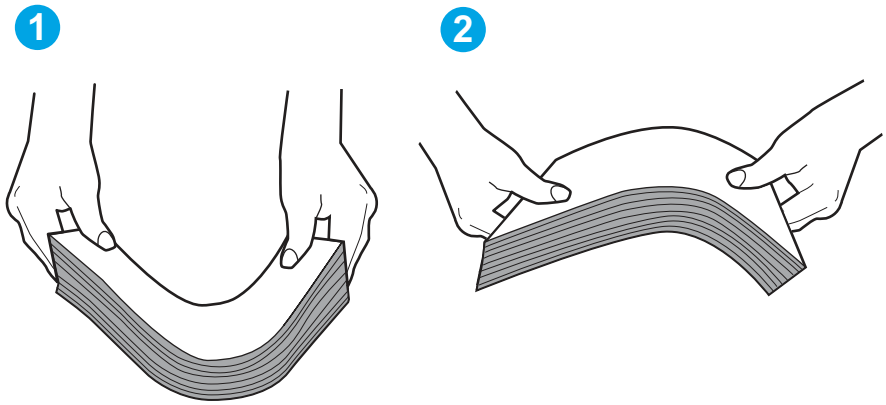

6. Check the printer control panel to see if it is displaying a prompt to feed the paper manually. Load paper, and continue.

7. The rollers above the tray might be contaminated. Clean the rollers with a lint-free cloth dampened with warm water. Use distilled water, if it is available.

CAUTION: Do not spray water directly on to the printer. Instead, spray water on the cloth or dab the cloth in water and wring it out before cleaning the rollers.

The following image shows examples of the roller location for various printers.

Figure 9-6 Roller locations for Tray 1 or the multipurpose tray

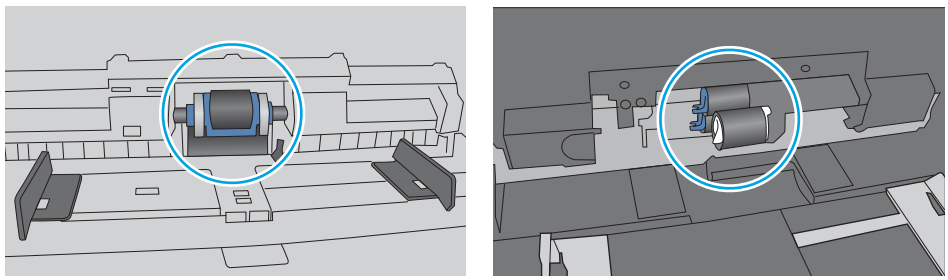

The document feeder jams, skews, or picks up multiple sheets of paper

Try the suggested fixes if the document feeder is jamming, skewing pages, or picking up multiple sheets of paper at a time.

NOTE: This information applies to MFP printers only.

- The original might have something on it, such as staples or self-adhesive notes, that must be removed.
- Check that all rollers are in place and that the roller-access cover inside the document feeder is closed.

- Make sure that the top document-feeder cover is closed.
- The pages might not be placed correctly. Straighten the pages and adjust the paper guides to center the stack.
- The paper guides must be touching the sides of the paper stack to work correctly. Make sure that the paper stack is straight and the guides are against the paper stack.
- The document feeder input tray or output bin might contain more than the maximum number of pages. Make sure the paper stack fits below the guides in the input tray, and remove pages from the output bin.
- Verify that there are no pieces of paper, staples, paper clips, or other debris in the paper path.
- Clean the document-feeder rollers and the separation pad. Use compressed air or a clean, lint-free cloth moistened with warm water. If misfeeds still occur, replace the rollers.

Clear paper jams

Use the procedures in this section to clear jammed paper from the printer paper path.

Experiencing frequent or recurring paper jams?

Follow the steps to solve problems with frequent paper jams. If the first step does not resolve the problem continue with the next step until you have resolved the problem.

1. If paper has jammed in the printer, clear the jam and then print a configuration page to test the printer.
2. Check that the tray is configured for the correct paper size and type on the printer control panel. Adjust paper settings if necessary.
   a. From the Home screen on the printer control panel, swipe the tab at the top of the screen downward to open the Dashboard, and then touch the Setup icon ⚙.
   b. Touch Paper setup.
   c. Select the tray from the list.
   d. Select Paper Type, and then select the type of paper that is in the tray.
   e. Select Paper Size, and then select the size of paper that is in the tray.
3. Turn the printer off, wait 30 seconds, and then turn it on again.
4. Print a cleaning page to remove excess toner from inside the printer:
   a. From the Home screen on the printer control panel, swipe the tab at the top of the screen downward to open the Dashboard, and then touch the Setup icon ⚙.
   b. Open the following menus:
      i. Printer Maintenance
      ii. Print Quality Tools
      iii. Cleaning Page
5. Print a configuration page to test the printer:

a. From the Home screen on the printer control panel, swipe the tab at the top of the screen downward to open the Dashboard, and then touch the Setup icon ⚙.

b. Open the following menus:

   i. Reports

   ii. Printer Configuration Report

If none of these steps resolves the problem, the printer might need service. Contact HP customer support.

Paper jam locations

Jams can occur in these locations.

Figure 9-7 **Paper jam locations**

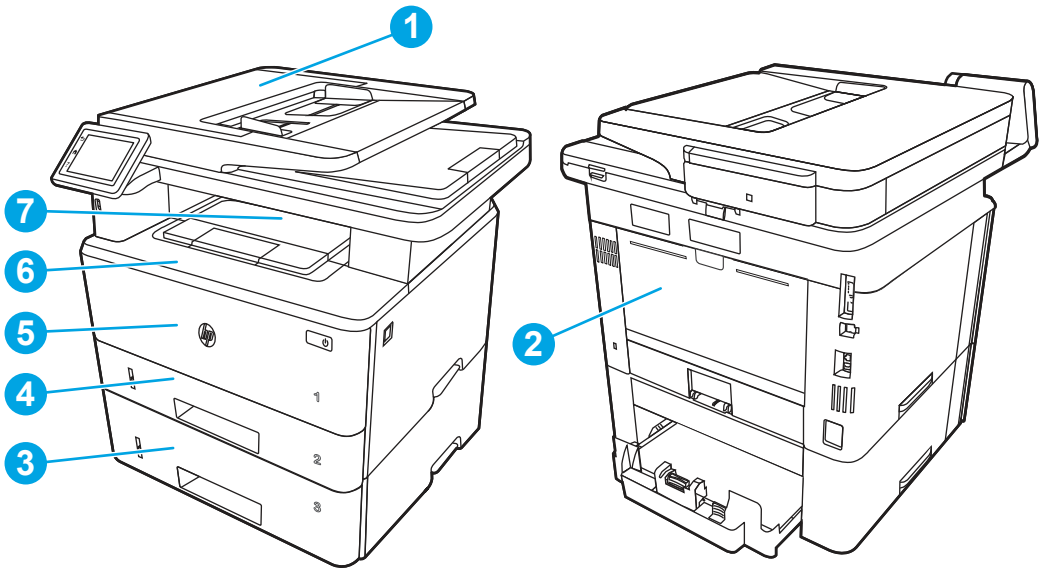

Number	Description
1	Document feeder
2	Fuser area
3	Tray 3 (optional)
4	Tray 2 Duplexing area (remove Tray 2 for access)
5	Tray 1
6	Toner cartridge area (open the front door for access)
7	Output bin

Loose toner might remain in the printer after a jam. This problem typically resolves itself after a few sheets have been printed.

31.13 jam error in the document feeder

Use the following procedure to check for paper in all possible jam locations related to the document feeder.

Recommended action for customers

When a jam occurs, the control panel displays an animation that assists in clearing the jam.

- **Document feeder job error, pick error.**

1. Open the document feeder cover.

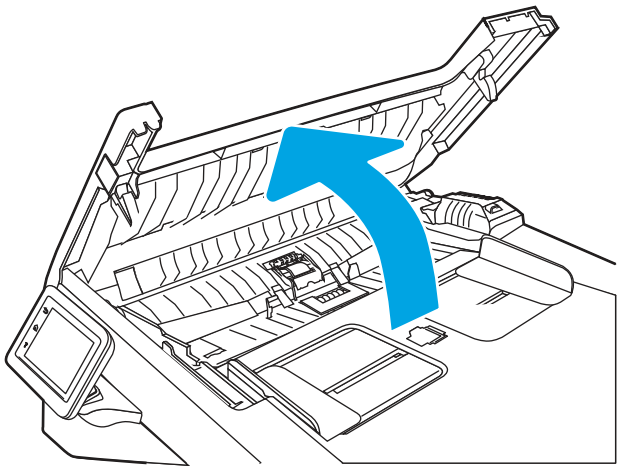

2. Gently pull the jammed paper out.

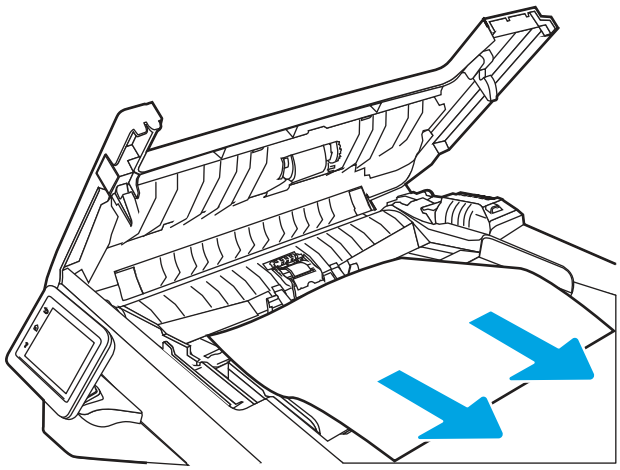

3. Close the document feeder cover. Make sure it is completely closed.

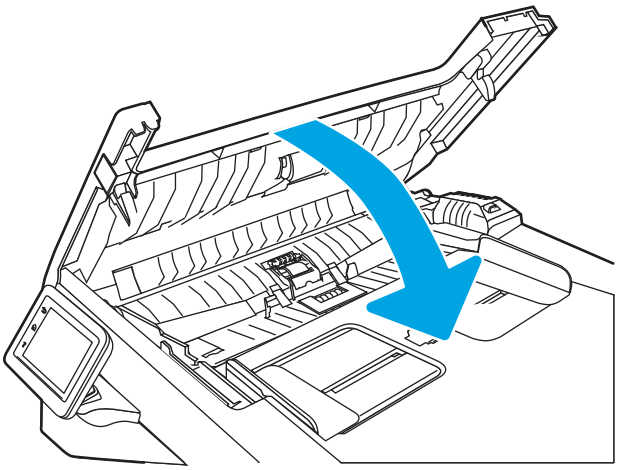

4. Open the document feeder tray cover.

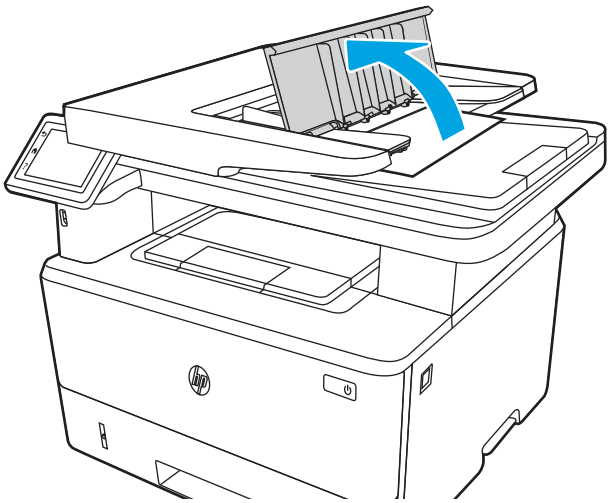

5. Gently pull the jammed paper out.

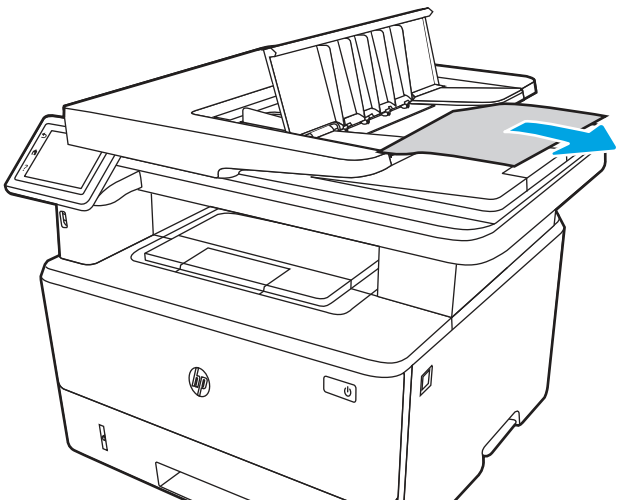

6. Close the document feeder tray cover.

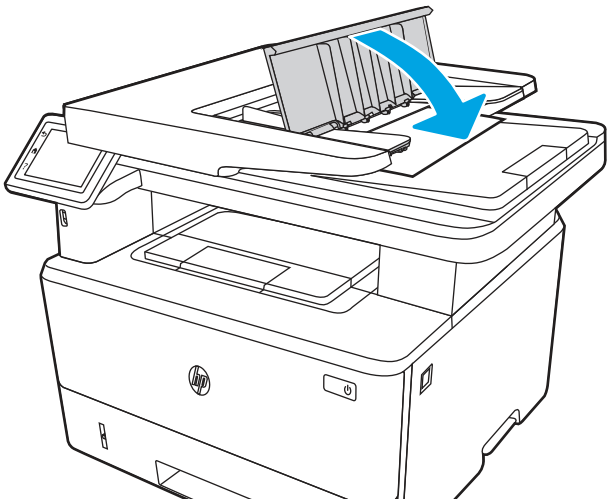

7. Open the scanner lid. If paper is jammed in the scanner lid, gently pull it out, and then close the scanner lid.

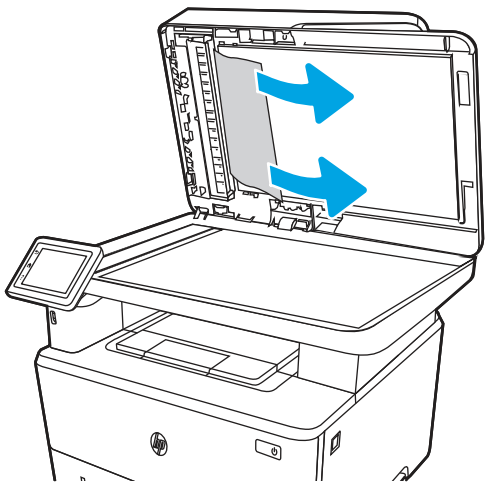

8. Ensure that the input tray is not overloaded and that the tray guides are set to the correct size. Make sure that the paper stack is correctly aligned at the center of the input tray when paper is loaded in the tray. The correct position of the loaded paper is parallel with the direction of travel into the document feeder paper path.

Figure 9-8 **Set the ADF guides**

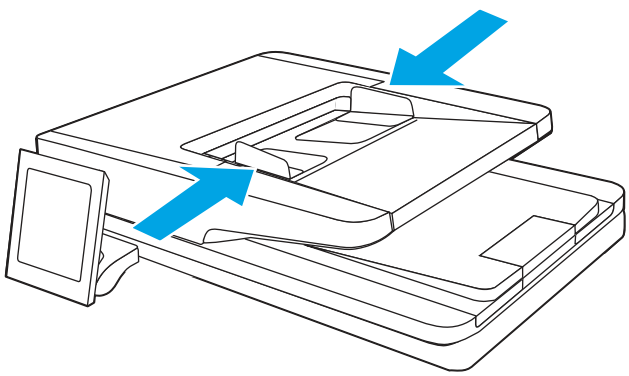

NOTE: To avoid jams, make sure the guides in the document feeder input tray are adjusted correctly. Remove all staples, paper clips, or tape from original documents.

NOTE: Original documents that are printed on heavy, glossy paper can jam more frequently than originals that are printed on plain paper.

9. Open the document feeder and check and clean the Document Feeder Kit rollers and separation pad by removing any visible lint or dust from each of the feed rollers and the separation pad using a clean lint-free cloth moistened with warm water. View the How to Clean the Pick Rollers in HP LaserJet and PageWide Printers for detailed instructions.

   Figure 9-9 **Clean the document feeder rollers**

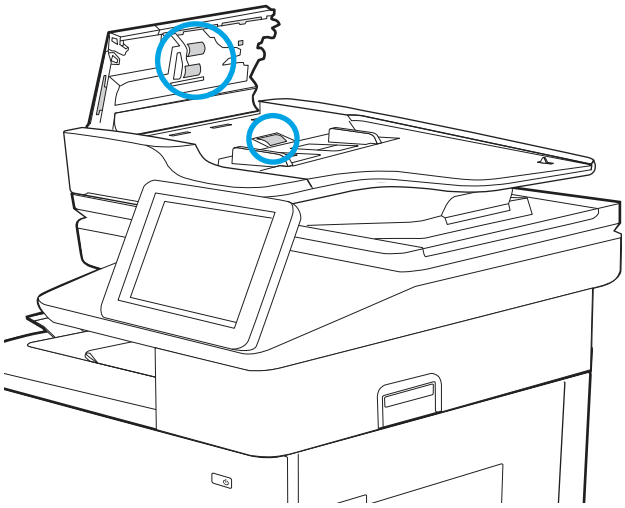

NOTE: Lift up the roller assembly to access and clean the second roller

10. If the error persists, contact your HP-authorized service or support provider, or contact customer support at www.hp.com/go/contactHP.

NOTE: To avoid jams, make sure the guides in the document feeder input tray are adjusted tightly against the document. Remove all staples and paper clips from original documents.

NOTE: Original documents that are printed on heavy, glossy paper can jam more frequently than originals that are printed on plain paper.

13.02 jam error tray 1

Use the following procedure to clear paper jams in Tray 1.

Recommended action for customers

- **13.02 jam error in tray 1**

1. Slowly pull the jammed paper out of the printer.

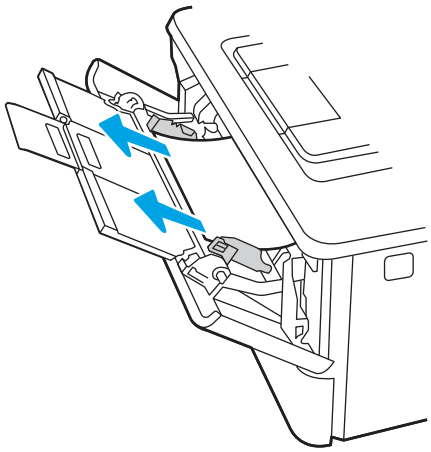

2. Adjust the paper guides to the correct paper size, then .reload paper into the tray.

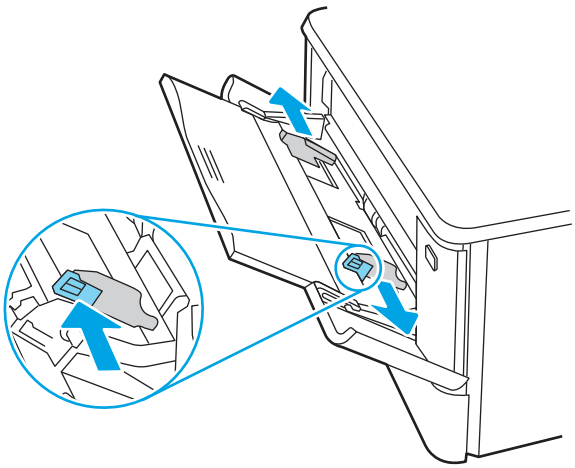

3. Ensure the tray is not overfilled. Paper should be below the 3 triangles in the following image.

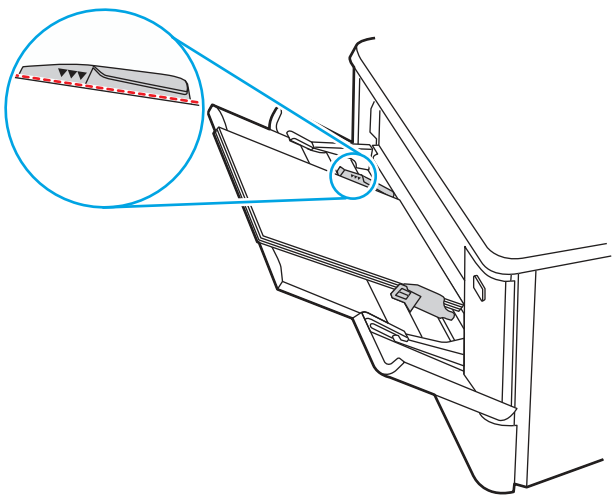

4. Ensure the type and quality of the paper being used meets the HP specifications for the printer.

5. If the error persists, clean the tray 1 pickup roller and separation pad.

   a. Press the door-release button, and then open the toner-cartridge door

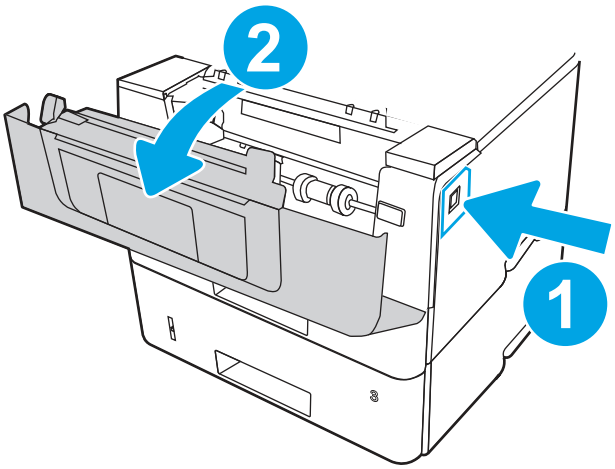

   b. To clean the roller thoroughly, release two tabs between the roller collar and roller, and then rotate the top of the roller out and away from the printer.

Figure 9-10 **Release the roller**

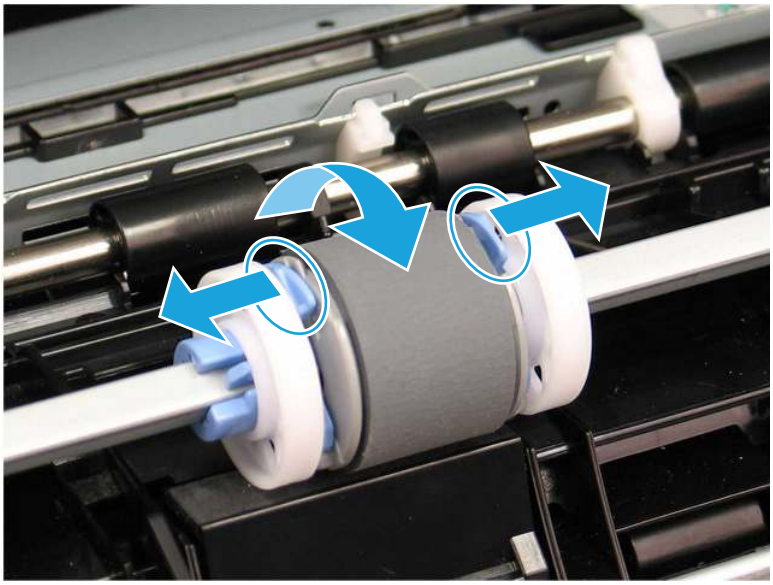

c. Remove the roller.

Figure 9-11 **Remove the roller**

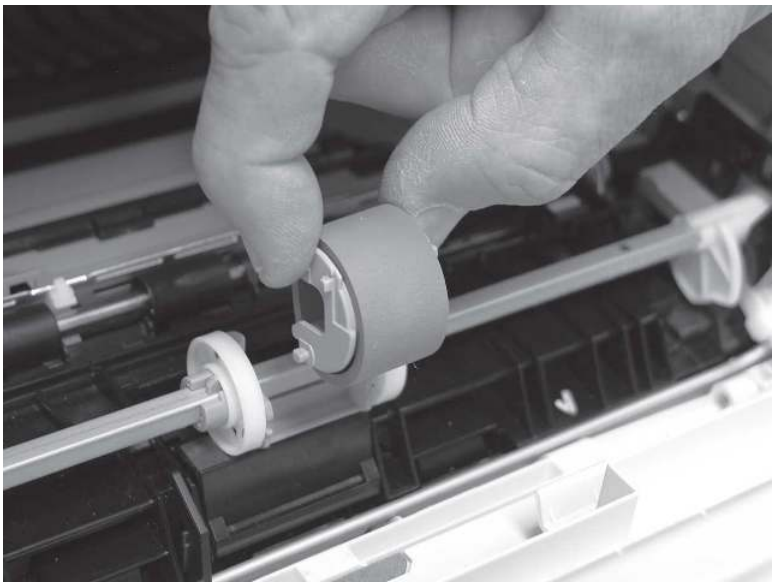

d. With the Tray 1 roller removed the separation pad is accessible in the printer (it does not need to be removed to be cleaned.

e. Use a damp, lint-free cloth to gently clean the rollers.

⚠ CAUTION: When handling the roller and pad, avoid touching the spongy surfaces. Skin oils and fingerprints on a roller surface can cause print-quality problems.

Figure 9-12 **Clean the roller and pad**

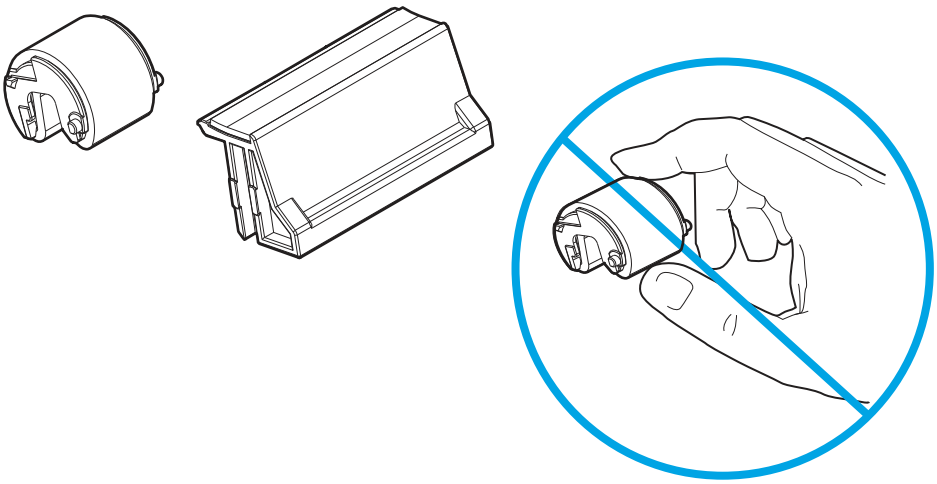

f. Position the pickup roller with the pins in the provided slots on the holder, and then rotate the top of the roller up and toward the printer.

Figure 9-13 Install the roller

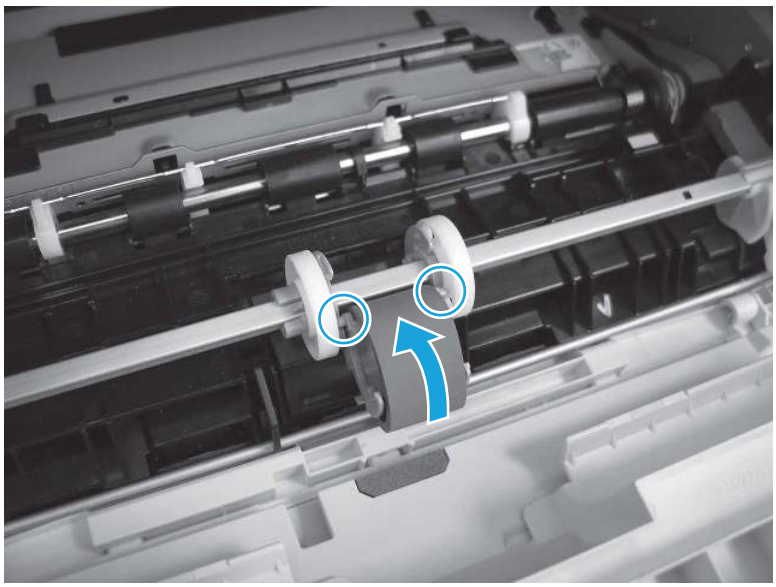

g. Continue to rotate the top of the roller toward the printer (callout 1), until two tabs (callout 2) snap into place.

Figure 9-14 Engage two tabs

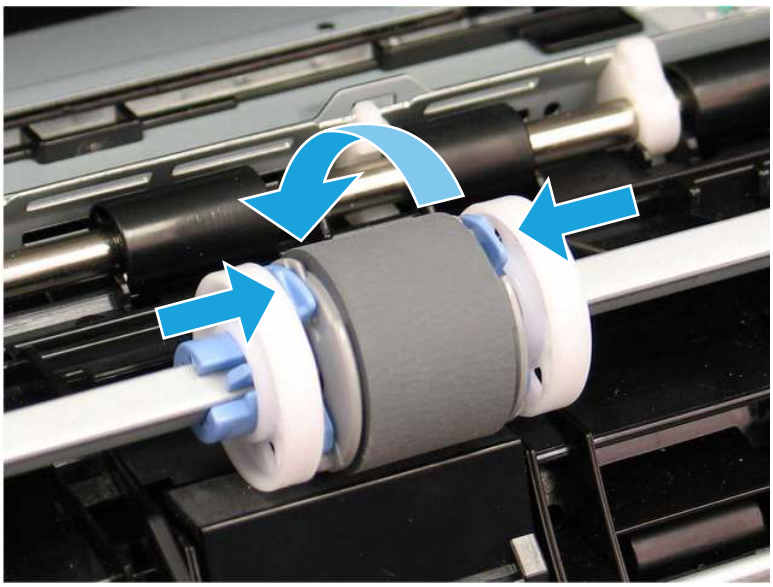

h. Close the toner-cartridge door.

6. Perform a test page from tray 1 to see if issue is resolved.

7. If the error persists, contact your HP-authorized service or support provider, or contact customer support at www.hp.com/go/contactHP.

13.03 jam error tray 2

Use the following procedure to check for paper in all possible jam locations related to Tray 2.

Recommended action for customers

- **13.03 jam error in tray 2**

When a jam occurs, the control panel displays an animation that assists in clearing the jam.

1. Remove the tray from the printer.

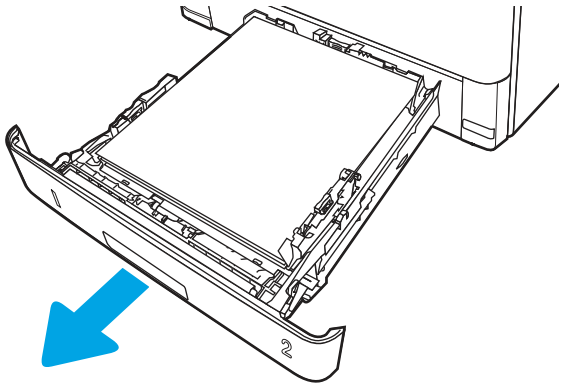

2. Remove the paper from the tray, and discard any damaged paper.

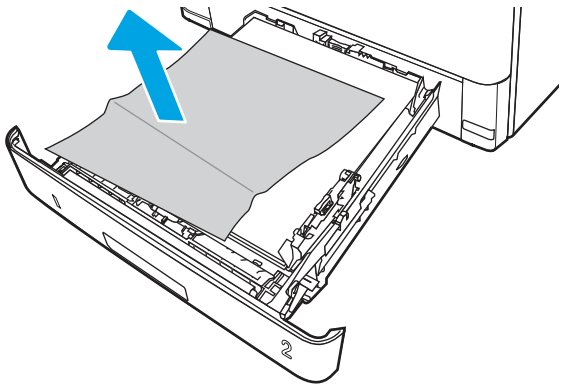

3. Verify that the rear paper guide is adjusted to the indentation for the correct paper size. If necessary, pinch the release and move the rear paper guide to the correct position. It should click into place.

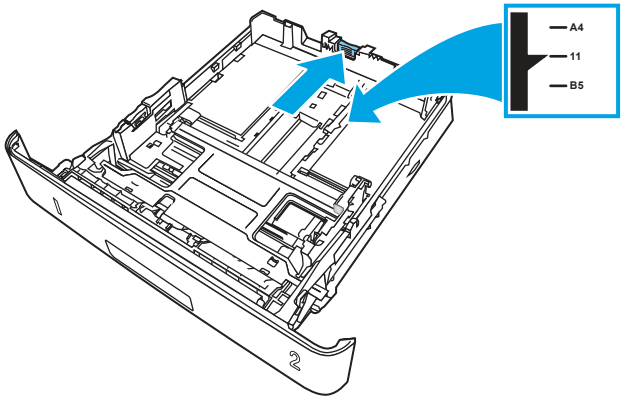

4. Load the paper into the tray. Make sure that the stack is flat at all four corners and that the top of the stack is below the maximum-height indicators.

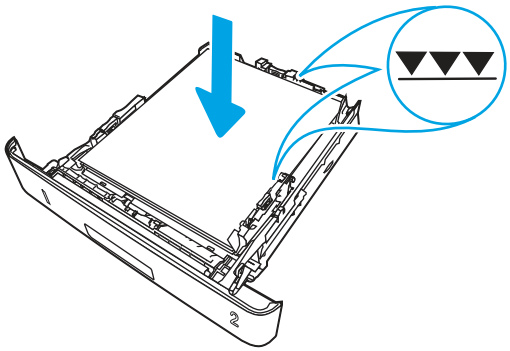

5. Reinsert and close the tray.

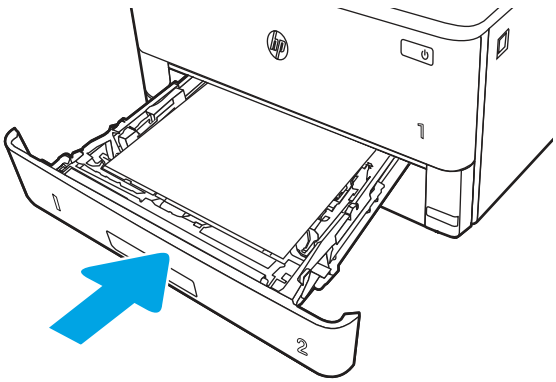

6. Press the front door release button.

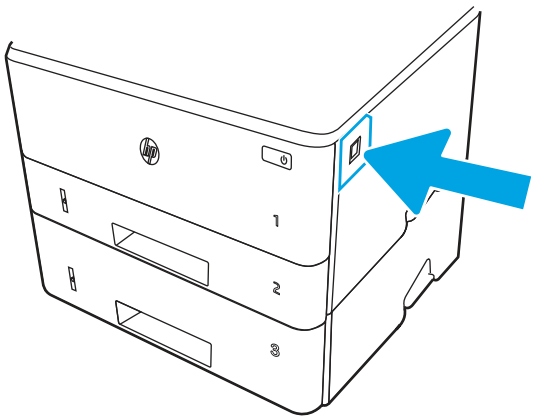

7. Open the front door.

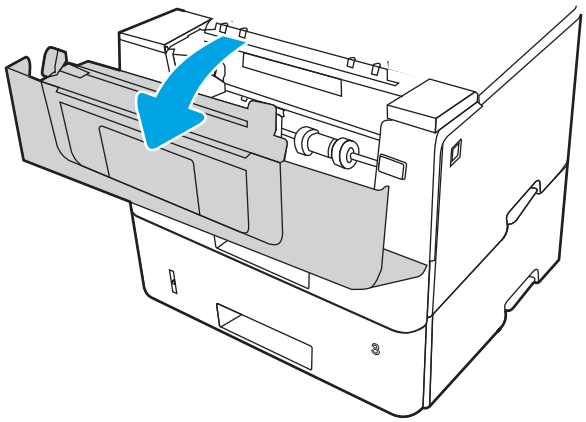

8. Remove the toner cartridge.

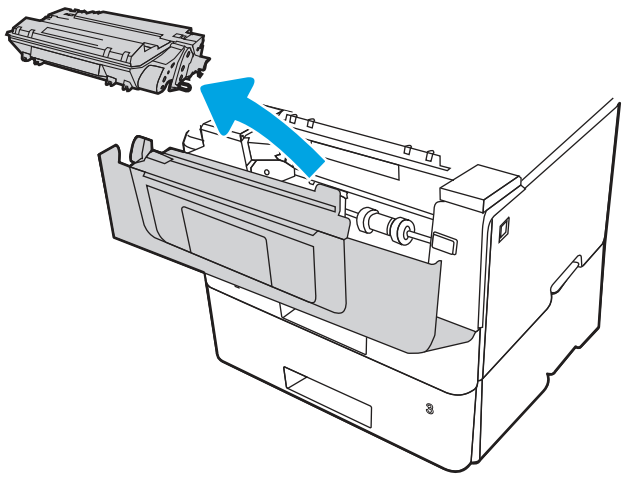

9. Lift the jam-access cover.

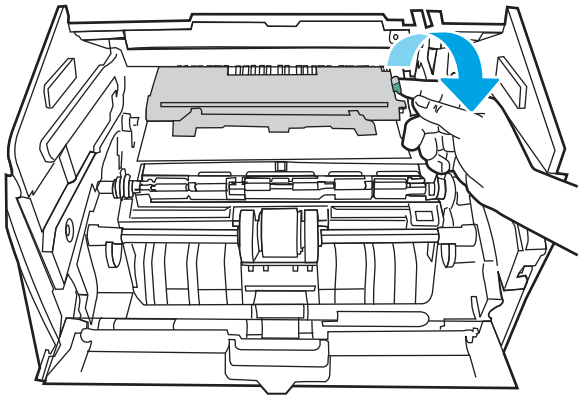

10. Remove any jammed paper.

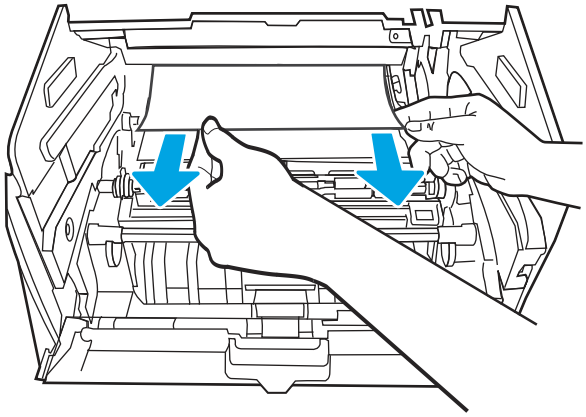

11. Install the toner cartridge.

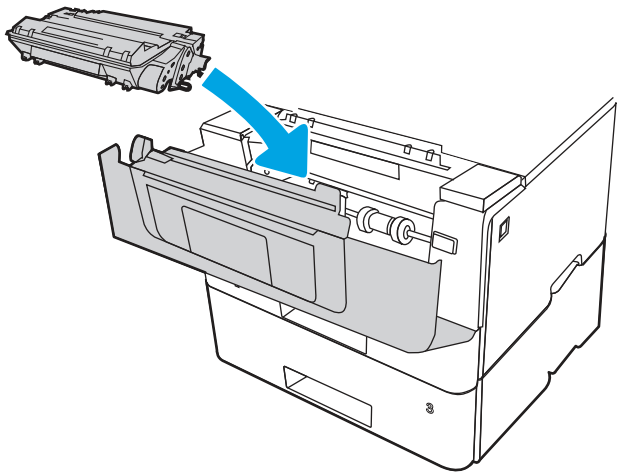

12. Close the front door.

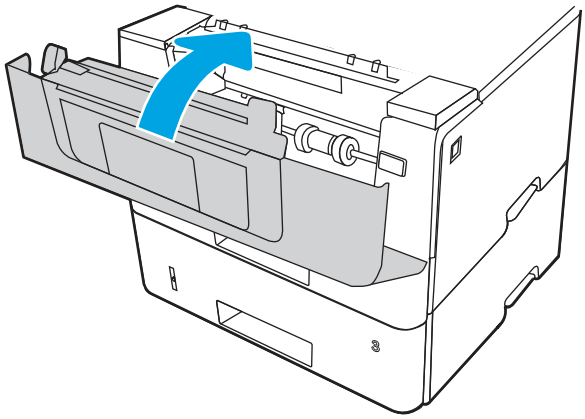

13. Ensure the type and quality of the paper being used meets the HP specifications for the printer.

14. If the error persists, clean the tray 2 pickup and feed rollers.

NOTE: A SFP printer is shown in this section. However, the procedure is correct for all printer models.

a. Remove tray 2 and locate the paper tray rollers.

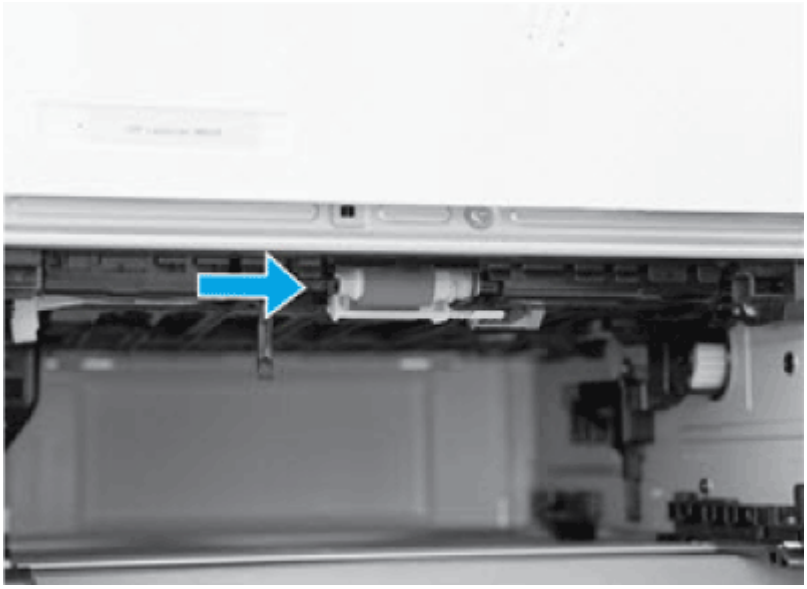

b. Clean the rollers by gently wiping them with a damp, lint-free cloth.

c. If needed for better access to the rollers, carefully rotate the printer backward.

CAUTION: To avoid damage to the rear cassette cover, keep it in the closed position

Figure 9-15 **Tilt the printer backward**

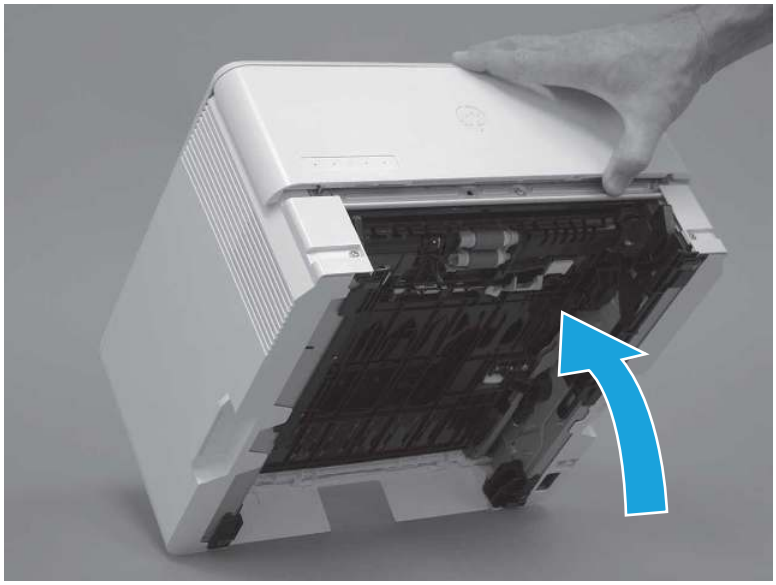

d. Continue rotate the printer backward until it rests on the rear cover, bottom-side face forward.

CAUTION: **MFP printers only**: The document feeder is not captive and can unexpectedly open when the printer is tilted backward.

Figure 9-16 **Place the printer bottom-side face forward**

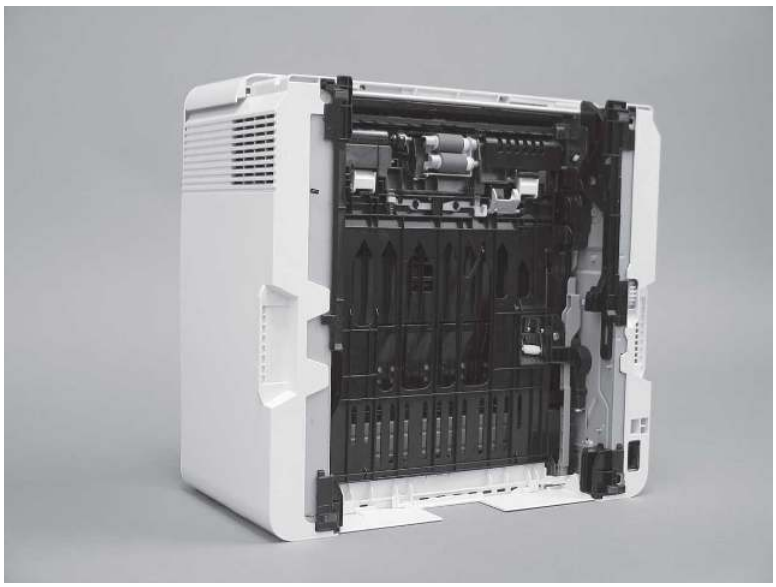

e. Use a damp, lint-free cloth to gently clean the rollers by wiping them with a back and forth motion.

NOTE: The roller in the tray (cassette) can be cleaned without removing it from the tray.

CAUTION: Do not touch the spongy portion of the roller. Skin oils on the roller can cause paper handling problems. HP recommends washing your hands before handling the assembly.

Figure 9-17 Clean the rollers

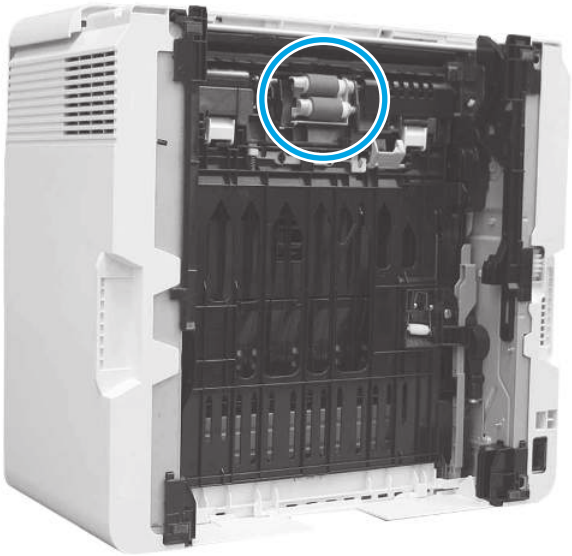

f. Carefully rotate the printer forward to position it back on its base. Reinstall the tray 2 paper tray.

15. Perform a test print from tray 2 to see if the issue is resolved.

16. If the error persists, contact your HP-authorized service or support provider, or contact customer support at www.hp.com/go/contactHP.

13.04 jam error tray 3

Use the following procedure to check for paper in all possible jam locations related to Tray 3.

Recommended action for customers

- **13.04 jam error in tray 3**

1. Remove the tray from the printer.

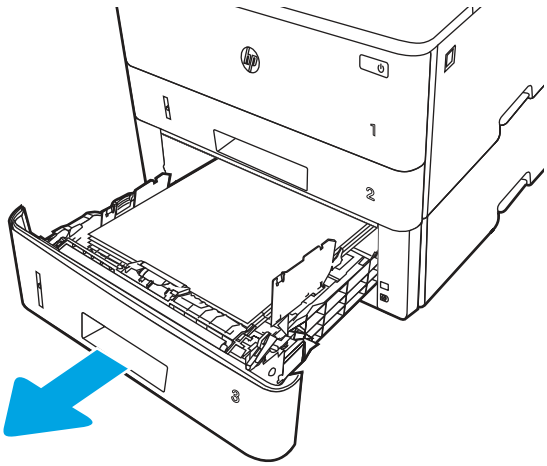

2. Remove the paper from the tray, and discard any damaged paper.

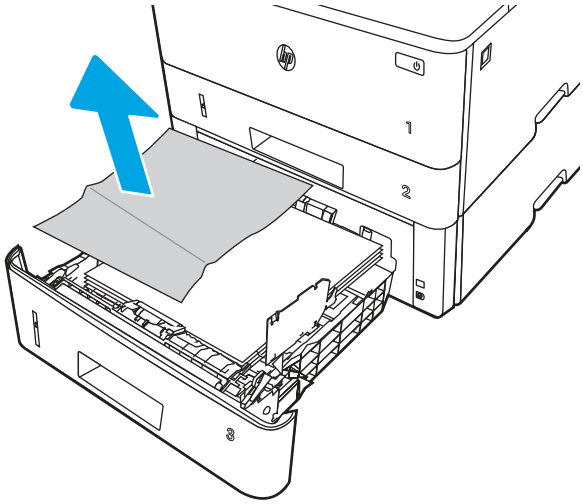

3. Verify that the rear paper guide is adjusted to the indentation for the correct paper size. If necessary, pinch the release and move the rear paper guide to the correct position. It should click into place.

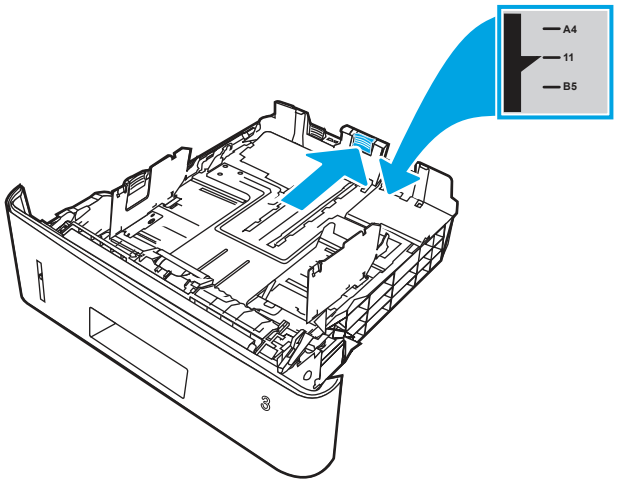

4. Load the paper into the tray. Make sure that the stack is flat at all four corners and that the top of the stack is below the maximum-height indicators.

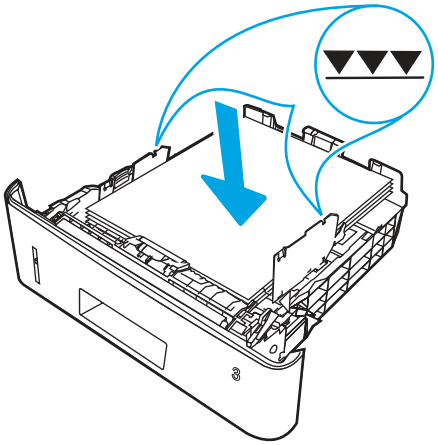

5. Reinsert and close the tray.

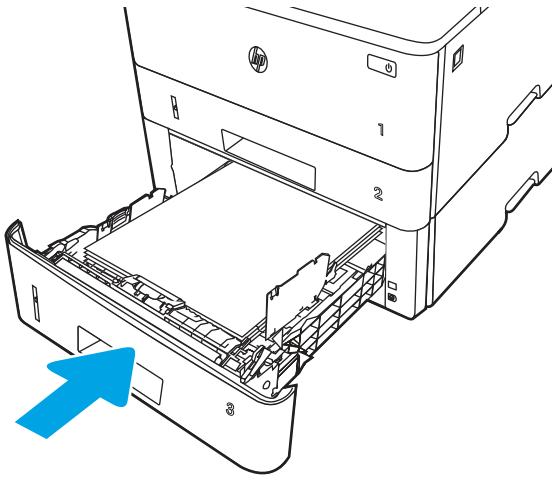

6. Press the front door release button.

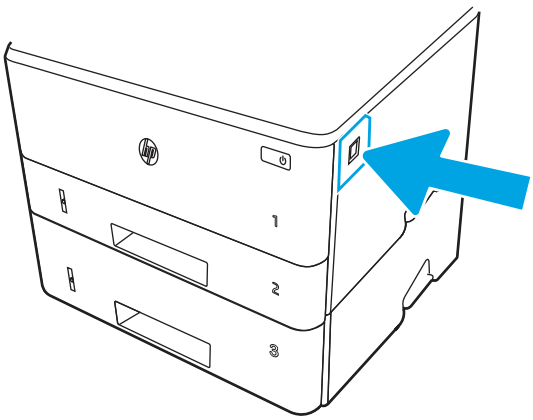

7. Open the front door.

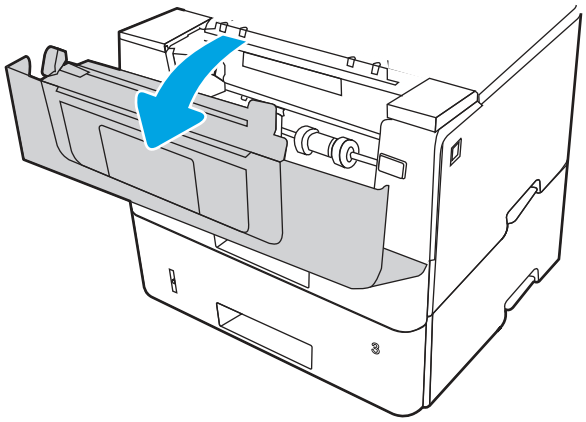

8. Remove the toner cartridge.

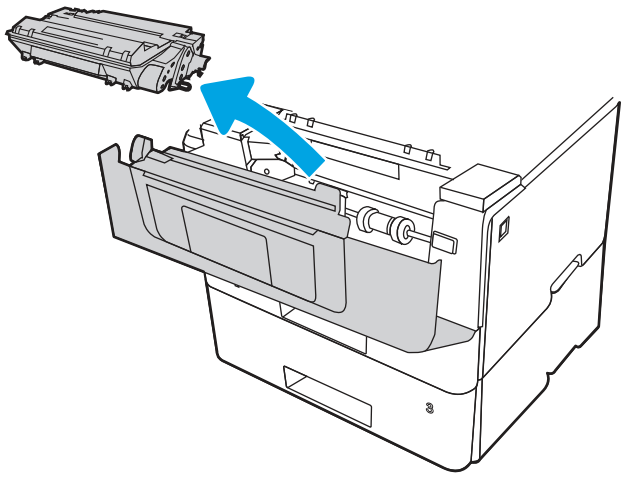

9. Lift the jam-access cover.

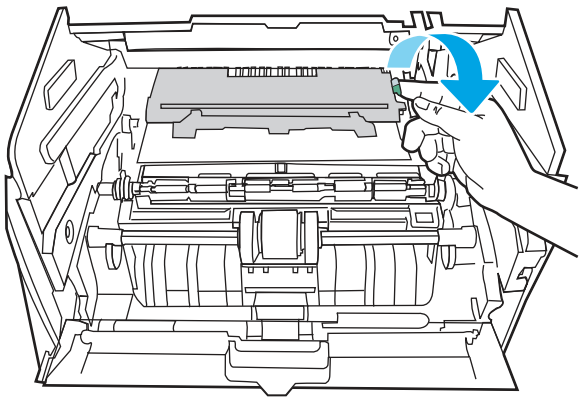

10. Remove any jammed paper.

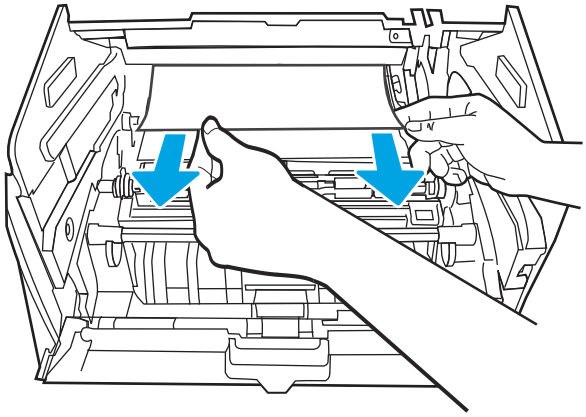

11. Install the toner cartridge.

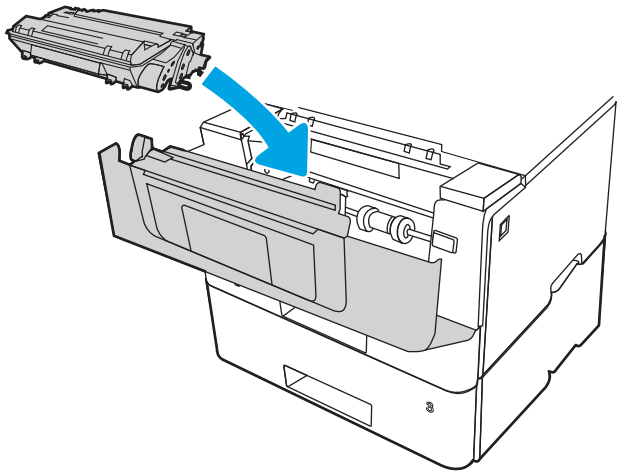

12. Close the front door.

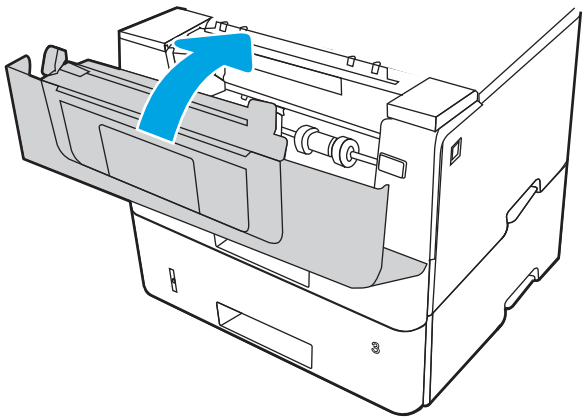

13. If the error persists, ensure the type and quality of the paper being used meets the HP specifications for the printer.

14. If the error persists, clean the tray 3 pickup and feed rollers.

a. Remove tray 3 and locate the paper tray rollers.

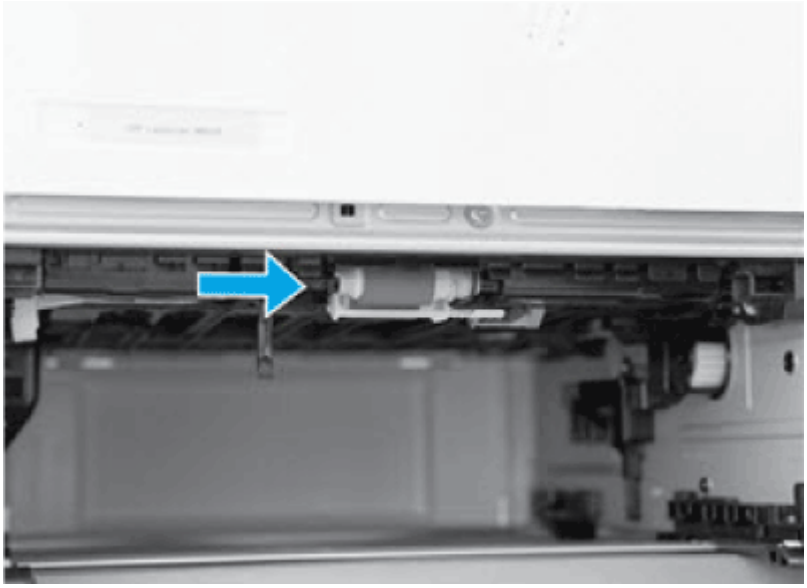

b. Clean the rollers by gently wiping them with a damp, lint-free cloth.

15. Perform a test print from tray 3 to see if the issue is resolved.

16. If the error persists, contact your HP-authorized service or support provider, or contact customer support at www.hp.com/go/contactHP.

13.08, 13.09 jam error in the toner cartridge or fuser area

Use the following procedure to check for paper in all possible jam locations in the toner cartridge or fuser area.

Recommended action for customers

- **13.08, 13.09 jam error in toner cartridge or fuser area**

1. Press the front door release button.

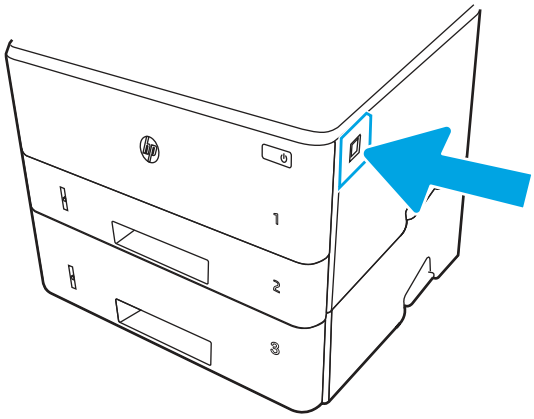

2. Open the front door.

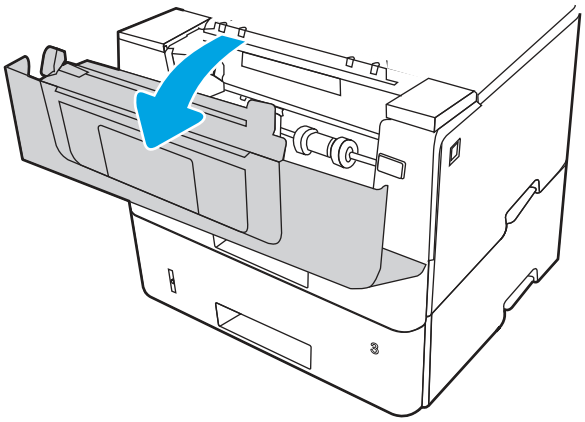

3. Remove the toner cartridge.

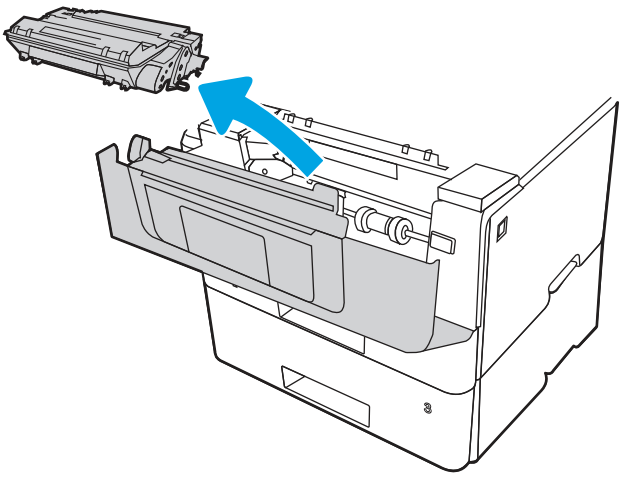

4. Lift the jam-access cover.

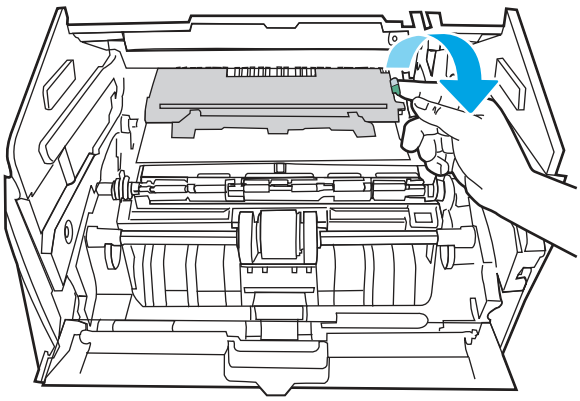

5. Remove any jammed paper.

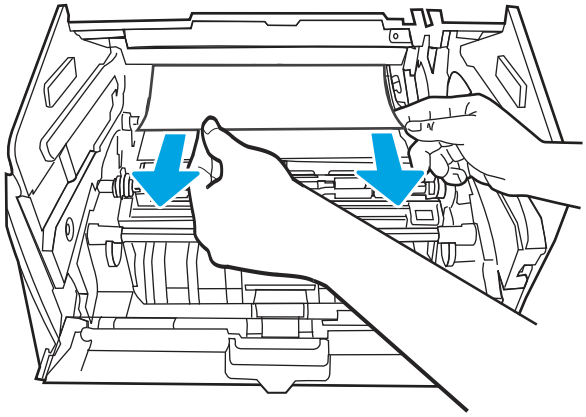

6. Install the toner cartridge.

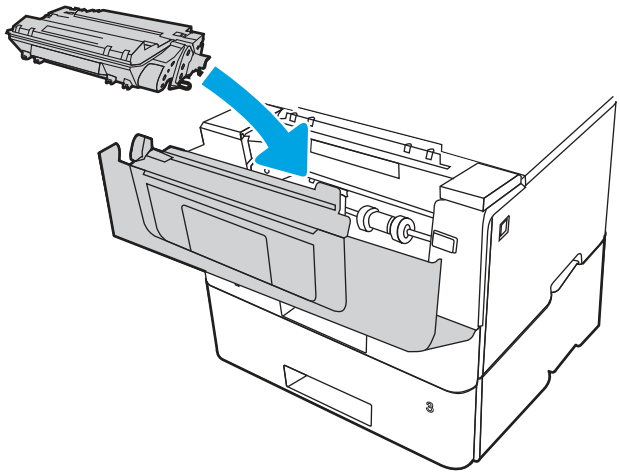

7. Open the front door and the rear door.

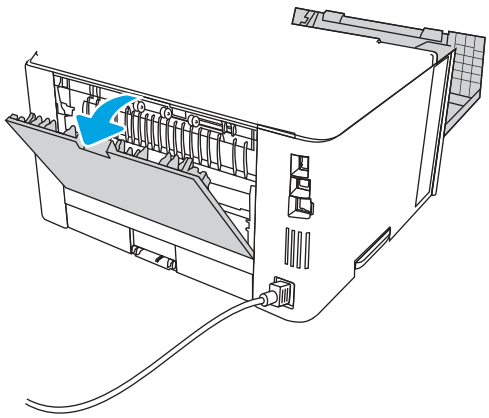

CAUTION: The fuser can be hot while the printer is in use. Wait for the fuser to cool before handling it.

8. If jammed paper is visible, remove any jammed paper from the rear door area.

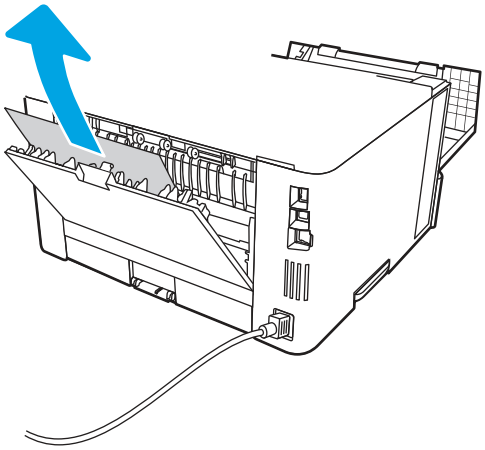

9. Close the rear door and the front door.

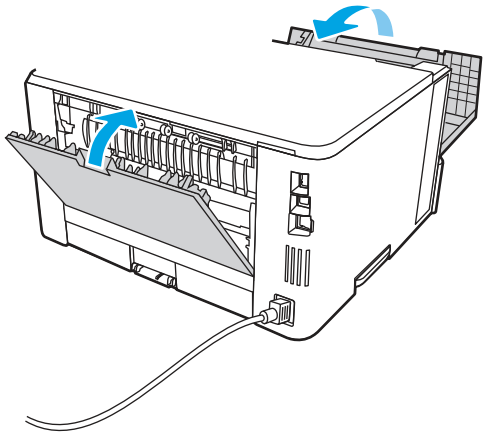

10. If the error persists, verify that the rear paper guide is adjusted to the indentation for the correct paper size. If necessary, pinch the release and move the rear paper guide to the correct position. It should click into place.

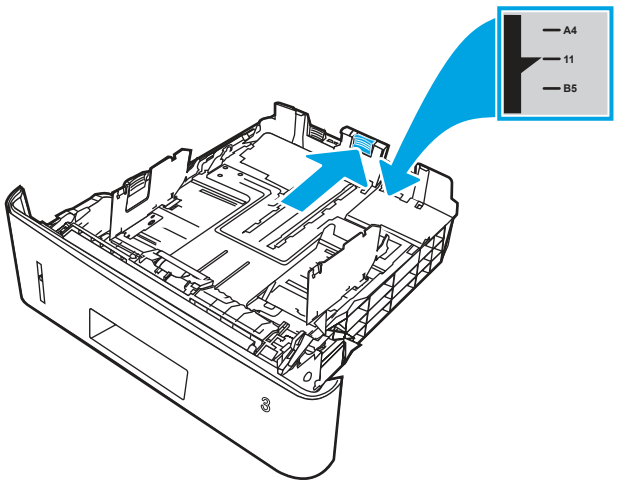

11. Load the paper into the tray. Make sure that the stack is flat at all four corners and that the top of the stack is below the maximum-height indicators.

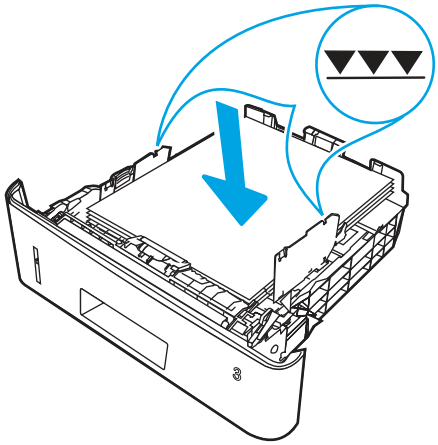

12. If the error persists, contact your HP-authorized service or support provider, or contact customer support at www.hp.com/go/contactHP.

13.10, 13.11, 13.13 jam error in the output bin

Use the following procedure to check for paper in all possible jam locations related to the output bin.

Recommended action for customers

When a jam occurs, the control panel displays an animation that assists in clearing the jam.

- **Paper is jammed in the output bin**

NOTE: Although the jam reports as an output bin jam the paper might be jammed in the rear door.

1. If paper is visible in the output bin, grasp the leading edge and remove it.

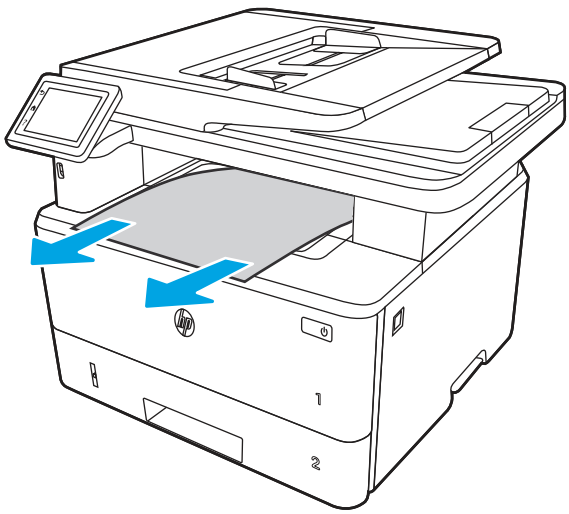

2. Press the front door release button.

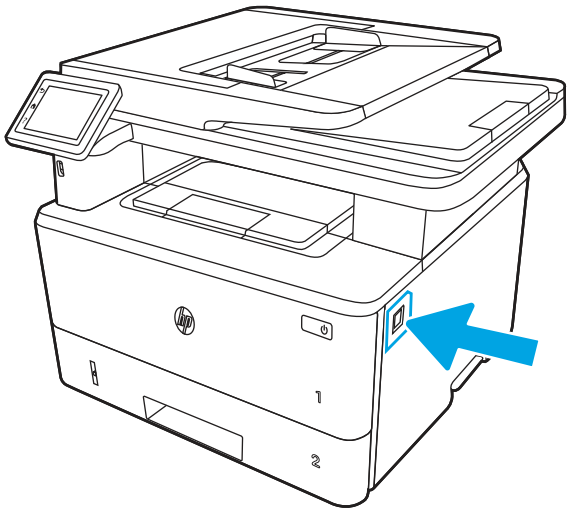

3. Open the front door.

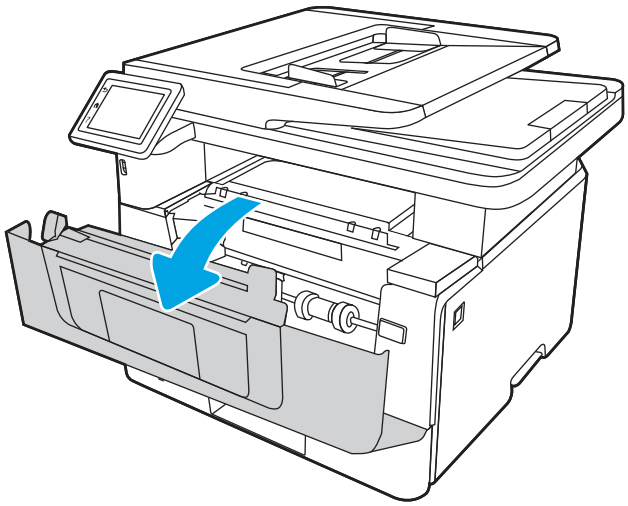

4. Lift the scanner assembly.

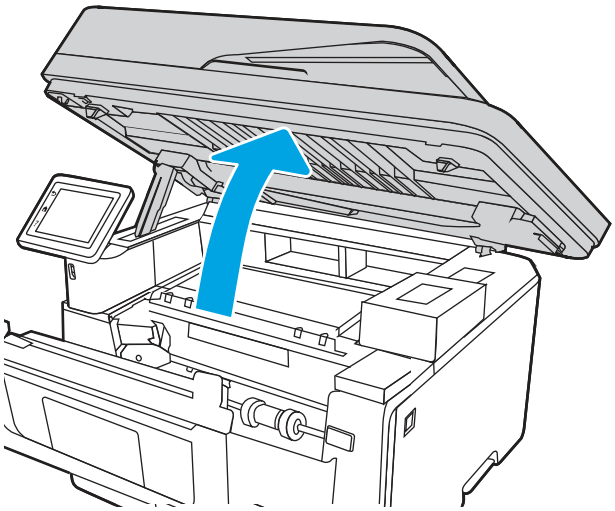

5. Remove any jammed paper.

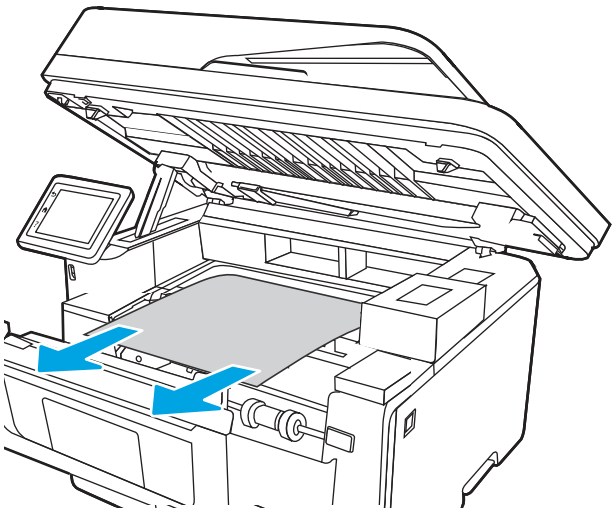

6. Close the scanner assembly.

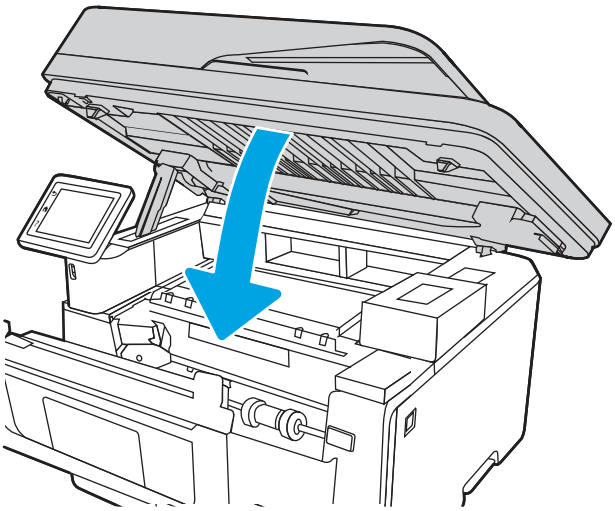

7. Open the rear door.

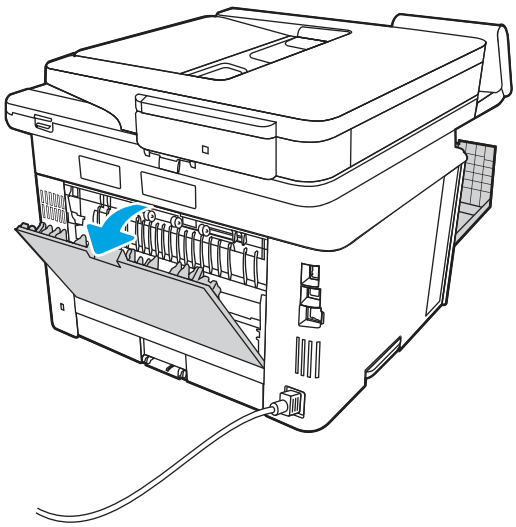

8. Remove any jammed paper from the rear door area.

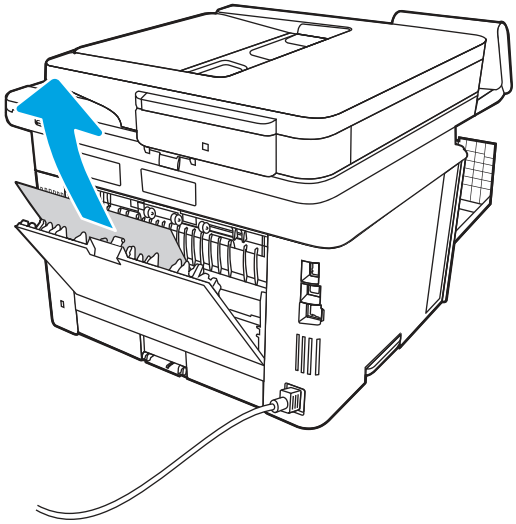

9. Close the rear door and the front door.

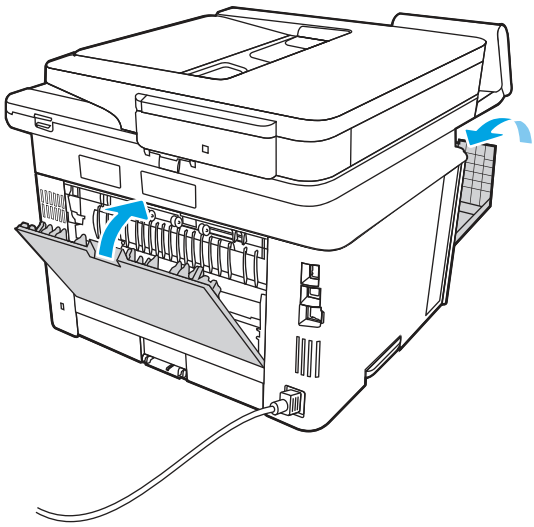

13.14, 13.15 jam error in the duplexer

Use the following procedure to check for paper in all possible jam locations in the automatic duplexer.

Recommended action for customers

When a jam occurs, the control panel displays an animation that assists in clearing the jam.

- **13.14, 13.15 jam error in the duplexer**

1. Completely remove Tray 2 from the printer.

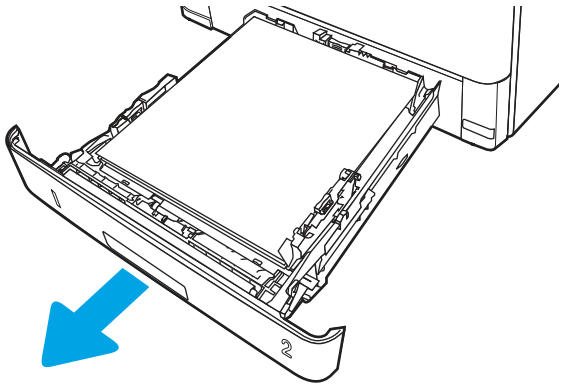

2. Push the green button to release the duplex pan.

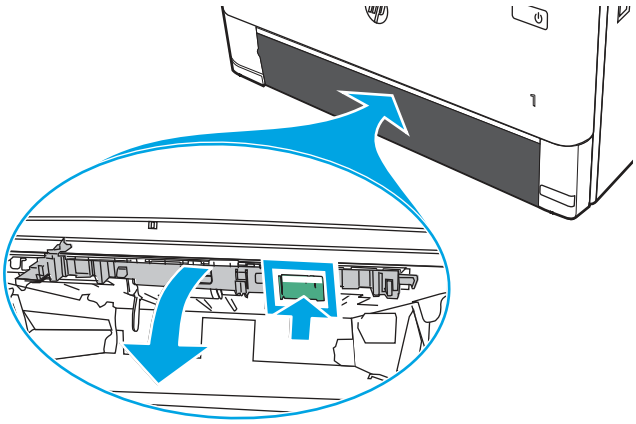

3. Remove any jammed paper.

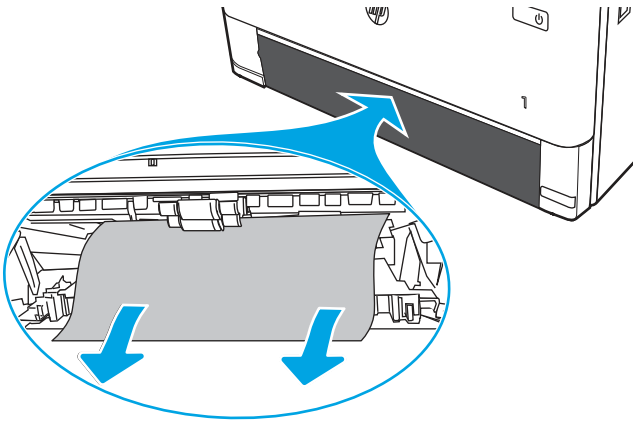

4. Close the duplex pan.

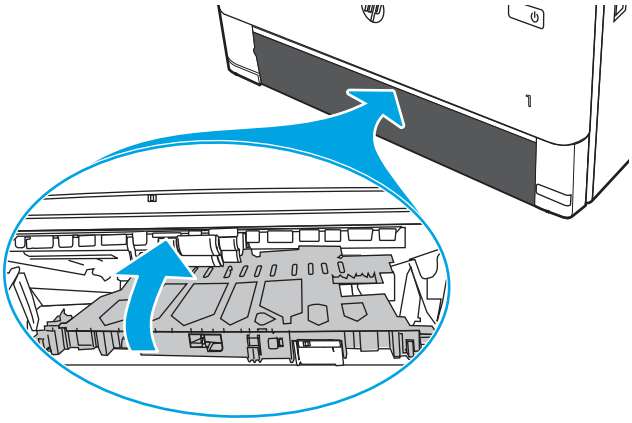

5. Reinsert Tray 2.

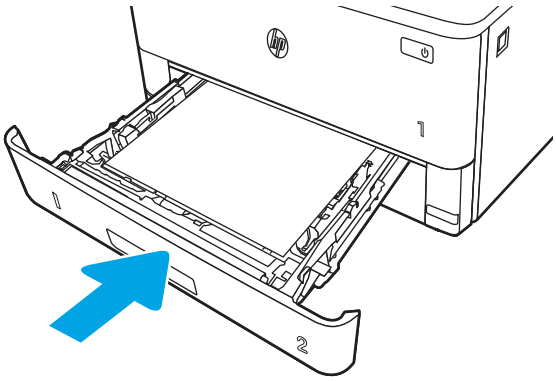

6. Press the front door release button.

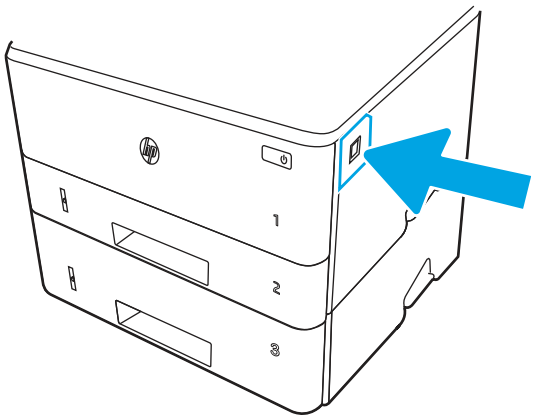

7. Open the front door.

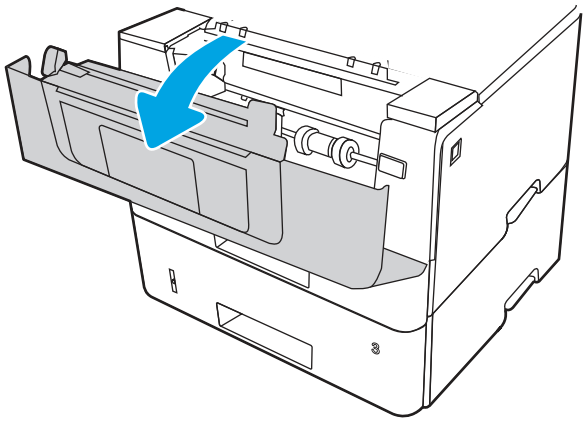

8. Close the front door.

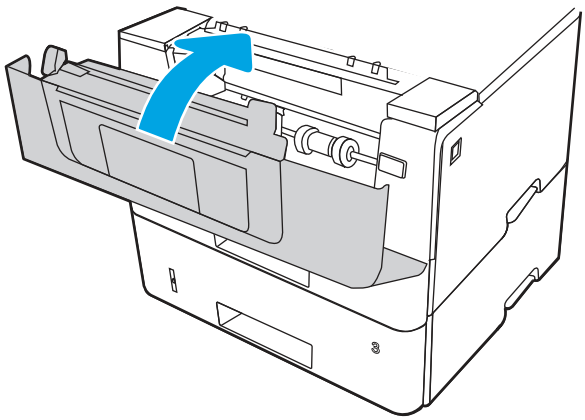

Resolving print quality problems

Review the following information about resolving print quality problems.

Introduction

Use the information below to troubleshoot print-quality problems, including issues with image quality.

The troubleshooting steps can help resolve the following defects:

- Blank pages
- Black pages
- Curled paper
- Dark or light bands
- Dark or light streaks
- Fuzzy print
- Gray background or dark print

- Light print
- Loose toner
- Missing toner
- Scattered dots of toner
- Skewed images
- Smears
- Streaks

Troubleshoot print quality

To resolve print-quality issues, try these steps in the order presented.

To troubleshoot specific image defects, see Troubleshoot Image Defects.

Update the printer firmware

Try upgrading the printer firmware.

See support.hp.com for more information.

Print from a different software program

Try printing from a different software program.

If the page prints correctly, the problem is with the software program from which you were printing.

Check the paper-type setting for the print job

Check the paper type setting when printing from a software program and the printed pages have smears, fuzzy or dark print, curled paper, scattered dots of toner, loose toner, or small areas of missing toner.

Check the paper type setting on the control panel

Check the paper type setting on the printer control panel, and change the setting as needed.

1. Open and close the paper tray.
2. Follow the control panel prompts to confirm or modify the paper type and size settings for the tray.
3. Make sure the paper loaded meets specifications.
4. Adjust the humidity and resistance setting on the control panel to match the environment.
   a. Open the following menus:
      i. Settings
      ii. Copy/Print
      iii. Print quality
      iv. Adjust paper type
   b. Select the paper type that matches the type loaded in the tray.

c. Use the arrows to increase or decrease the humidity and resistance setting.

5. Make sure the driver settings match the control panel settings.

NOTE: The print driver settings will override any control panel settings.

Check the paper type setting (Windows)

Check the paper type setting for Windows, and change the setting as needed.

NOTE: The print driver settings will override any control panel settings.

1. From the software program, select the **Print** option.
2. Select the printer, and then click the **Properties** or **Preferences** button.
3. Click the **Paper/Quality** tab.
4. From the **Paper Type** drop-down list, click the **More...** option.
5. Expand the list of **Type is:** options.
6. Expand the category of paper types that best describes your paper.
7. Select the option for the type of paper you are using, and click the **OK** button.
8. Click the **OK** button to close the **Document Properties** dialog box. In the **Print** dialog box, click the **OK** button to print the job.

Check the paper type setting (macOS)

Check the paper type setting for macOS, and change the setting as needed.

1. Click the **File** menu, and then click the **Print** option.
2. In the **Printer** menu, select the printer.
3. Click **Show Details** or **Copies & Pages**.
4. Open the menus drop-down list, and then click the **Paper/Quality** menu.
5. Select a type from the **Media Type** drop-down list.
6. Click the **Print** button.

Check toner-cartridge status

Follow these steps to check the estimated life remaining in the toner cartridges, and if applicable, the status of other replaceable maintenance parts.

Step one: Print a supplies status page

Use the control panel menus to print a supplies status page.

1. From the Home screen on the printer control panel, swipe the tab at the top of the screen downward to open the Dashboard, and then touch the Setup icon ⚙.
2. Scroll to and touch Reports.
3. Scroll to and touch Supplies Status Page to print the report.

Step two: Check supplies status

The Supplies Status Page contains information about the cartridges and other replaceable maintenance parts.

1. Look at the Supplies Status Page to check the percent of life remaining for the toner cartridges, and if applicable, the status of other replaceable maintenance parts.
   - Print quality problems can occur when using a toner cartridge that is at its estimated end of life. The Supplies Status Page indicates when a supply level is very low.
   - HP's Premium Protection Warranty expires when a message, indicating that HP's Premium Protection Warranty on this supply has ended, displays on the Supplies Status Page, or in the EWS.
   - The toner cartridge does not need to be replaced now unless the print quality is no longer acceptable. Consider having a replacement cartridge available to install when print quality is no longer acceptable.
   - If you determine that you need to replace a toner cartridge, or another replaceable maintenance part, the genuine HP part numbers are listed on the Supplies Status Page.
2. Check to see if you are using a genuine HP cartridge.

   A genuine HP toner cartridge has "HP" on it, or it has the HP logo. For more information on identifying HP cartridges, go to www.hp.com/go/learnaboutsupplies.

Print a cleaning page

During the printing process, paper, toner, and dust particles can accumulate inside the printer and can cause print-quality issues such as toner specks or spatter, smears, streaks, lines, or repeating marks.

Use the following procedure to print a cleaning page:

1. From the Home screen on the printer control panel, swipe the tab at the top of the screen downward to open the Dashboard, and then touch the Setup icon ⚙.
2. Scroll to and touch the following menus:
   a. Printer Maintenance
   b. Print Quality Tools
   c. Cleaning Page
3. When prompted, load plain Letter or A4 size paper, and then touch OK.

   A **Cleaning** message displays on the printer control panel. Wait until the process is complete. Discard the page that prints.

Visually inspect the toner cartridge or cartridges

Follow these steps to inspect each toner cartridge:

1. Remove the toner cartridge from the printer, and verify that the sealing tape has been removed.
2. Check the memory chip for damage.

3. Examine the surface of the green imaging drum.

> ⚠ CAUTION: Do not touch the imaging drum. Fingerprints on the imaging drum can cause print-quality problems.

4. If you see any scratches, fingerprints, or other damage on the imaging drum, replace the toner cartridge.

5. Reinstall the toner cartridge and print a few pages to see if the problem has resolved.

Check paper and the printing environment

Use the following information to check the paper selection and the printing environment.

Step one: Use paper that meets HP specifications

Some print-quality problems arise from using paper that does not meet HP specifications.

- Always use a paper type and weight that this printer supports.
- Use paper that is of good quality and free of cuts, nicks, tears, spots, loose particles, dust, wrinkles, voids, staples, and curled or bent edges.
- Use paper that has not been previously printed on.
- Use paper that does not contain metallic material, such as glitter.
- Use paper that is designed for use in laser printers. Do not use paper that is designed only for use in Inkjet printers.
- Use paper that is not too rough. Using smoother paper generally results in better print quality.

Step two: Check the environment

The environment can directly affect print quality and is a common cause of print-quality or paper-feeding issues. Try the following solutions:

- Move the printer away from drafty locations, such as open windows or doors, or air-conditioning vents.
- Make sure the printer is not exposed to temperatures or humidity outside of printer specifications.
- Do not place the printer in a confined space, such as a cabinet.
- Place the printer on a sturdy, level surface.
- Remove anything that is blocking the vents on the printer. The printer requires good air flow on all sides, including the top.
- Protect the printer from airborne debris, dust, steam, grease, or other elements that can leave residue inside the printer.

Step three: Set the individual tray alignment

Follow these steps when text or images are not centered or aligned correctly on the printed page when printing from specific trays.

1. From the Home screen on the printer control panel, swipe the tab at the top of the screen downward to open the Dashboard, and then touch the Setup icon ⚙.

2. Scroll to and open the following menus:
   a. Tray Management
   b. Image Adjust
3. Select the tray to adjust, and then touch Print Test Page to print the report.
4. Follow the instructions on the printed pages.
5. Touch Print Test Page again to verify the results, and then make further adjustments if necessary.

Try a different print driver

Try a different print driver when printing from a software program and the printed pages have unexpected lines in graphics, missing text, missing graphics, incorrect formatting, or substituted fonts.

Download any of the following drivers from the HP Web site: www.hp.com/support/ljmfp4101-4104.

Table 9-3 Print drivers

Driver	Description
HP PCL.6 driver	If available, this printer-specific print driver supports older operating systems like Windows XP and Windows Vista. For a list of supported operating systems, go to www.hp.com/go/support.
HP PCL 6 driver	This printer-specific print driver supports Windows 7 and newer operating systems that support version 3 drivers. For a list of supported operating systems, go to www.hp.com/go/support.
HP PCL-6 driver	This product-specific print driver supports Windows 8 and newer operating systems that support version 4 drivers. For a list of supported operating systems, go to www.hp.com/go/support.
HP UPD PS driver	• Recommended for printing with Adobe software programs or with other highly graphics-intensive software programs • Provides support for printing from Postscript emulation needs, or for Postscript flash font support
HP UPD PCL 6	• Recommended for printing in all Windows environments • Provides the overall best speed, print quality, and printer feature support for most users • Developed to align with Windows Graphic Device Interface (GDI) for best speed in Windows environments • Might not be fully compatible with third-party and custom software programs that are based on PCL 5

Check the EconoMode settings

HP does not recommend the full-time use of EconoMode. If EconoMode is used full-time, the toner supply might outlast the mechanical parts in the toner cartridge. If print quality begins to degrade and is no longer acceptable, consider replacing the toner cartridge.

NOTE: This feature is available with the PCL 6 print driver for Windows. If you are not using that driver, you can enable the feature by using the HP Embedded Web Server.

Follow these steps if the entire page is too dark or too light.

1. From the software program, select the **Print** option.
2. Select the printer, and then click the **Properties** or **Preferences** button.
3. Click the **Paper/Quality** tab, and locate the **Print Quality** area.
4. If the entire page is too dark, use these settings:
   - Select the **600 dpi** option, if available.
   - Select the **EconoMode** setting to enable it.

   If the entire page is too light, use these settings:
   - Select the **FastRes 1200** option, if available.
   - Make sure the **EconoMode** setting is not enabled.
5. Click the **OK** button to close the **Document Properties** dialog box. In the **Print** dialog, click the **OK** button to print the job.

Adjust print density

Adjust the print density when your printing results are too dense or too light in color.

Complete the following steps to adjust the print density:

1. Open the HP Embedded Web Server:
   a. From the Home screen on the printer control panel, touch the Wireless icon or the Ethernet icon to view the printer's IP address or host name.
   b. Open a web browser, and in the address line, type the IP address or host name exactly as it displays on the printer control panel. Press the Enter key on the computer keyboard. The EWS opens.

   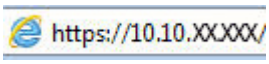

   NOTE: If a message displays in the web browser indicating that the website might not be safe, select the option to continue to the website. Accessing this website will not harm the computer.
2. On the EWS Home page, click the **Settings** tab.
3. In the left navigation pane, click **Preferences** to expand the options, and then click **General Printer Settings**.
4. Under **Print Density**, use the drop-down list to select the desired setting.
5. Click **Apply** to save the changes.

Troubleshoot image defects

Review examples of image defects and steps to resolve these defects.

Table 9-4 Image defects table quick reference

Sample	Description	Possible solutions
Table 9-11 Light print on page 142	Table 9-9 Gray background or dark print on page 141	Table 9-7 Blank page – No print on page 139 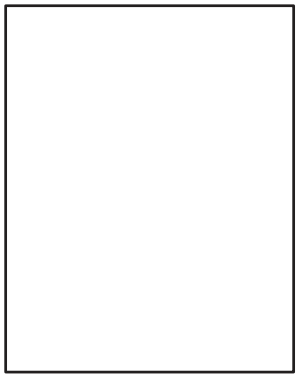
Table 9-6 Black page on page 139	Table 9-5 Banding defects on page 138 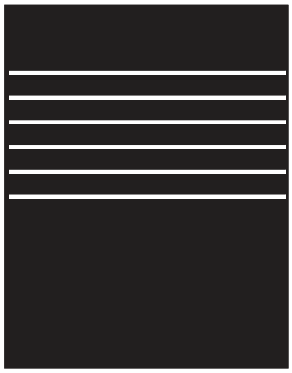	Table 9-13 Streak defects on page 143 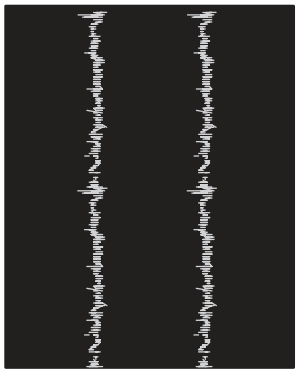
Table 9-8 Fixing/fuser defects on page 140 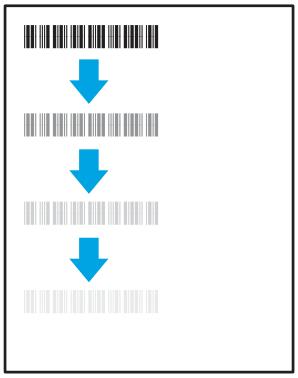	Table 9-10 Image placement defects on page 141	Table 9-12 Output defects on page 142 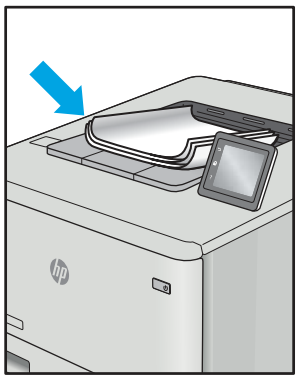

Image defects, no matter the cause, can often be resolved using the same steps. Use the following steps as a starting point for solving image defect issues.

1. Reprint the document. Print quality defects can be intermittent in nature or can go away completely with continued printing.
2. Check the condition of the cartridge or cartridges. If a cartridge is in a **Very Low** state (it has passed the rated life), replace the cartridge.
3. Make sure that the driver and tray print mode settings match the media that is loaded in the tray. Try using a different ream of media or a different tray. Try using a different print mode.
4. Make sure that the printer is within the supported operating temperature/humidity range.
5. Make sure that the paper type, size, and weight are supported by the printer. See support.hp.com for a list of the supported paper sizes and types for the printer.

NOTE: The term "fusing" refers to the part of the printing process where toner is affixed to paper.

The following examples depict letter-size paper that has passed through the printer short edge first.

Table 9-5 **Banding defects**

Sample	Description	Possible solutions
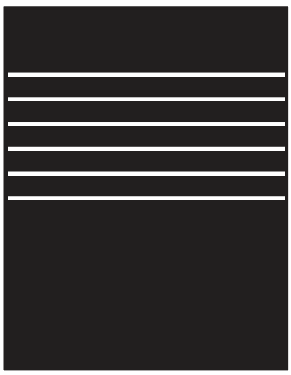	Dark or light lines which repeat down the length of the page, and are wide-pitch and/or impulse bands. They might be sharp or soft in nature. The defect displays only in areas of fill, not in text or sections with no printed content.	1. Reprint the document. 2. Try printing from another tray. 3. Replace the cartridge. 4. Use a different paper type. 5. **Enterprise models only:** From the Home screen on the printer control panel, go to the Adjust Paper Types menu, and then choose a print mode that is designed for a slightly heavier media than what you are using. This slows the print speed and might improve the print quality. 6. If the issue persists, go to support.hp.com.

Table 9-6 Black page

Sample	Description	Possible solutions
	The entire printed page is black.	1. Visually inspect the cartridge to check for damage. 2. Make sure that the cartridge is installed correctly. 3. Replace the cartridge. 4. If the issue persists, go to support.hp.com.

Table 9-7 Blank page – No print

Sample	Description	Possible solutions
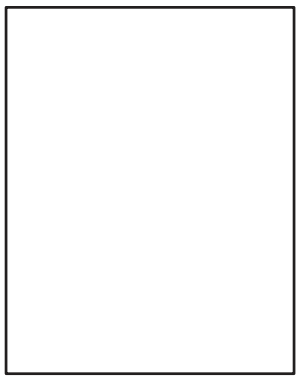	The page is completely blank and contains no printed content.	1. Make sure that the cartridges are genuine HP cartridges. 2. Make sure that the cartridge is installed correctly. 3. Print with a different cartridge. 4. Check the paper type in the paper tray and adjust the printer settings to match. If necessary, select a lighter paper type. 5. If the issue persists, go to support.hp.com.

Table 9-8 Fixing/fuser defects

Sample	Description	Possible solutions
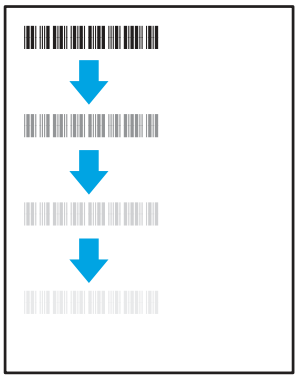	Slight shadows or offsets of the image are repeated down the page. The repeated image might fade with each recurrence.	1. Reprint the document. 2. Check the paper type in the paper tray and adjust the printer settings to match. If necessary, select a lighter weight paper type. 3. If the issue persists, go to support.hp.com.
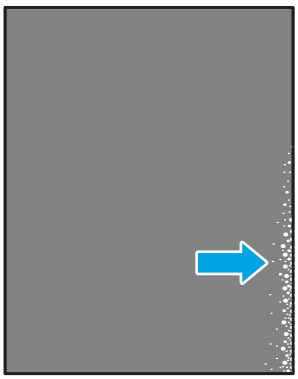	Toner rubs off along either edge of the page. This defect is more common at the edges of high-coverage jobs, and on light media types, but can occur anywhere on the page.	1. Reprint the document. 2. Check the paper type in the paper tray and adjust the printer settings to match. If necessary, select a heavier paper type. 3. **Enterprise models only:** From the printer control panel, go to the Edge-to-Edge menu and then select Normal. Reprint the document. 4. **Enterprise models only:** From the printer control panel, select Auto Include Margins and then reprint the document. 5. If the issue persists, go to support.hp.com.

Table 9-9 Gray background or dark print

Sample	Description	Possible solutions
	The image or text is darker than expected and/or the background is gray.	1. Make sure that the paper in the trays has not already been run through the printer. 2. Use a different paper type. 3. Reprint the document. 4. **Mono models only:** From the Home screen on the printer control panel, go to the Adjust Toner Density menu, and then adjust the toner density to a lower level. 5. Make sure that the printer is within the supported operating temperature and humidity range. 6. Replace the cartridge. 7. If the issue persists, go to support.hp.com.

Table 9-10 Image placement defects

Sample	Description	Possible solutions
	The image is not centered, or is skewed on the page. The defect occurs when the paper is not positioned properly as it is pulled from the tray and moves through the paper path.	1. Reprint the document. 2. Remove the paper and then reload the tray. Make sure that all the paper edges are even on all sides. 3. Make sure that the top of the paper stack is below the tray-full indicator. Do not overfill the tray. 4. Make sure that the paper guides are adjusted to the correct size for the paper. Do not adjust the paper guides tightly against the paper stack. Adjust them to the indentations or markings in the tray. 5. If the issue persists, go to support.hp.com.

Table 9-11 **Light print**

Sample	Description	Possible solutions
	The printed content is light or faded on the entire page.	1. Reprint the document. 2. Remove the cartridge, and then shake it to redistribute the toner. Reinsert the toner cartridges into the printer and close the cover. For a graphical representation of this procedure, see *Replace the toner cartridges*. 3. **Mono models only:** Make sure that the EconoMode setting is disabled, both at the printer control panel and in the print driver. 4. Make sure that the cartridge is installed correctly. 5. Print a Supplies Status Page and check the life and usage of the cartridge. 6. Replace the cartridge. 7. If the issue persists, go to support.hp.com.

Table 9-12 **Output defects**

Sample	Description	Possible solutions
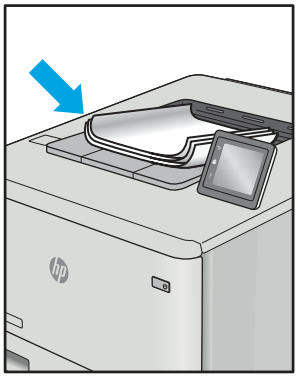	Printed pages have curled edges. The curled edge can be along the short or long side of the paper. Two types of curl are possible: • **Positive curl:** The paper curls toward the printed side. The defect occurs in dry environments or when printing high-coverage pages. • **Negative curl:** The paper curls away from the printed side. The defect occurs in high-humidity environments or when printing low-coverage pages.	1. Reprint the document. 2. **Positive curl:** From the printer control panel, select a heavier paper type. The heavier paper type creates a higher temperature for printing. **Negative curl:** From the printer control panel, select a lighter paper type. The lighter paper type creates a lower temperature for printing. Try storing the paper in a dry environment prior to use, or use freshly opened paper. 3. Print in duplex mode. 4. If the issue persists, go to support.hp.com.

Table 9-12 Output defects (continued)

Sample	Description	Possible solutions
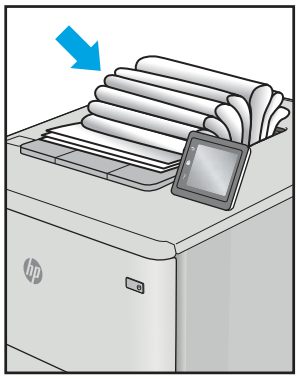	The paper does not stack well in the output tray. The stack might be uneven, skewed, or the pages might be pushed out of the tray and onto the floor. Any of the following conditions can cause this defect: • Extreme paper curl • The paper in the tray is wrinkled or deformed • The paper is a non-standard paper type, such as envelopes • The output tray is too full	1. Reprint the document. 2. Extend the output bin extension. 3. If the defect is caused by extreme paper curl, refer to the troubleshooting steps for "Output curl." 4. Use a different paper type. 5. Use freshly opened paper. 6. Remove the paper from the output tray before the tray gets too full. 7. If the issue persists, go to support.hp.com.

Table 9-13 Streak defects

Sample	Description	Possible solutions
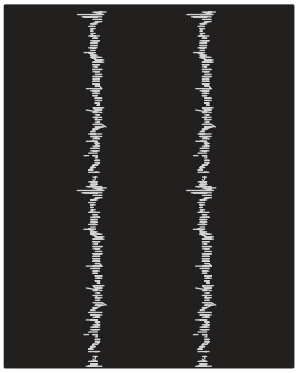	Light vertical streaks that usually span the length of the page. The defect displays only in areas of fill, not in text or sections with no printed content.	1. Reprint the document. 2. Remove the cartridge, and then shake it to redistribute the toner. Reinsert the toner cartridges into the printer and close the cover. For a graphical representation of this procedure, see *Replace the toner cartridges*. 3. If the issue persists, go to support.hp.com. NOTE: Both light and dark vertical streaks can occur when the printing environment is outside the specified range for temperature or humidity. Refer to your printer's environmental specifications for allowable temperature and humidity levels.

Table 9-13 Streak defects (continued)

Sample	Description	Possible solutions
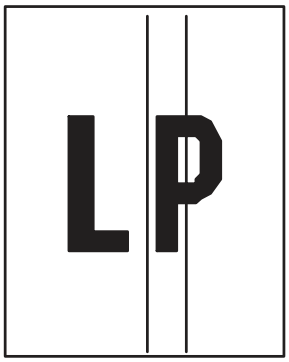	Dark vertical lines which occur down the length of the page. The defect might occur anywhere on the page, in areas of fill or in sections with no printed content.	1. Reprint the document. 2. Remove the cartridge, and then shake it to redistribute the toner. Reinsert the toner cartridges into the printer and close the cover. For a graphical representation of this procedure, see *Replace the toner cartridges*. 3. Print a cleaning page. 4. Check the toner level in the cartridge. 5. If the issue persists, go to support.hp.com.

Improve copy and scan image quality

Learn how to improve the quality of copies and scanned images, and how to properly clean the scanner glass.

Introduction

If the printer is having image quality problems, try the following solutions in the order presented to resolve the issue.

Try these few simple steps first:

- Use the flatbed scanner rather than the document feeder.
- Use high-quality originals.
- When using the document feeder, load the original document into the feeder correctly, using the paper guides, to avoid unclear or skewed images.

If the problem still exists, try these additional solutions. If they do not fix the problem, see "Improve print quality" for further solutions.

Check the scanner glass for dirt and smudges

Over time, specks of debris might collect on the scanner glass and white plastic backing, which can affect performance. Use the following procedure to clean the scanner.

1. Press the Power button to turn off the printer, and then disconnect the power cable from the electrical outlet.
2. Open the scanner lid.

3. Clean the scanner glass and the white plastic backing underneath the scanner lid with a soft cloth or sponge that has been moistened with nonabrasive glass cleaner.

⚠ CAUTION: Do not use abrasives, acetone, benzene, ammonia, ethyl alcohol, or carbon tetrachloride on any part of the printer; these can damage the printer. Do not place liquids directly on the glass or platen. They might seep and damage the printer.

4. Dry the glass and white plastic parts with a chamois or a cellulose sponge to prevent spotting.
5. Connect the power cable to an outlet, and then press the Power button to turn on the printer.

Check the paper settings

Follow these steps to check the paper settings on the printer control panel.

1. From the Home screen on the printer control panel, swipe the tab at the top of the screen downward to open the Dashboard, and then touch the Setup icon ⚙.
2. Scroll to and touch Paper Setup, and then touch the name of the tray you are printing from.
3. Touch Paper Size, and then touch the paper size option that matches the size of paper in the tray.
4. Touch Paper Type, and then touch the paper type option that matches the type of paper in the tray.

Check the image adjustment settings

To improve copy quality, adjust the image settings using the printer control panel.

1. From the Home screen on the printer control panel, touch the Copy icon.
2. Touch the Document or ID Card icon.
3. Touch the Settings icon ⚙, and then scroll to and touch the following menu items to adjust the settings:
   - Quality: Choose the output quality for the image.
   - Lighter/Darker: Adjust the lightness/darkness setting.
   - Enhancements: Choose an image enhancement option.
   - Binding Margin: Turn the binding margin setting on or off.
4. Touch the Back button ↩ to return to the main copy menu, and then touch Copy to begin copying.

Optimize for text or pictures

Follow these steps to optimize the scan or copy for text or pictures.

1. From the Home screen on the printer control panel, touch the Copy icon.
2. Touch the Document or ID Card icon.
3. Touch the Settings icon ⚙, and then scroll to and touch Enhancements.
4. Touch one of the following options depending on the type of document you are copying:
   - None: Use this setting when you are not concerned about the quality of the copy. This is the default setting.

- Text: Use this setting for documents that contain mostly text.
- Photo: Use this setting for photos or documents that contain mostly graphics.
- Mixed: Use this setting for documents that contain a mixture of text and graphics.

Check the scanner resolution and color settings on the computer

If you are printing a scanned image, and the quality is not what you expected, you might have selected a resolution or color setting in the scanner software that does not match your needs. Resolution and color affect the following features of scanned images:

- Image clarity
- Texture of gradations (smooth or rough)
- Scan time
- File size

Scanning resolution is measured in pixels per inch (ppi).

NOTE: Scanning ppi levels are not interchangeable with printing dpi (dots per inch) levels.

Color, grayscale, and black and white define the number of colors possible. You can adjust the scanner hardware resolution for up to 1200 ppi.

The resolution and color guidelines table lists simple tips that you can follow to meet your scanning needs.

NOTE: Setting the resolution and color to a high value can create large files that take up disk space and slow the scanning process. Before setting the resolution and color, determine how you are going to use the scanned image.

Resolution and color guidelines

The following table describes the recommended resolution and color settings for different types of scan jobs.

NOTE: The default resolution is 200 ppi.

Table 9-14 Resolution and color guidelines

Intended use	Recommended resolution	Recommended color settings
Fax	150 ppi	• Black and White
Email	150 ppi	• Black and White, if the image does not require smooth gradation • Grayscale, if the image requires smooth gradation • Color, if the image is in color
Edit text	300 ppi	• Black and White

Table 9-14 Resolution and color guidelines (continued)

Intended use	Recommended resolution	Recommended color settings
Print (graphics or text)	600 ppi for complex graphics, or if you want to significantly enlarge the document 300 ppi for normal graphics and text 150 ppi for photos	• Black and White for text and line art • Grayscale for shaded or colored graphics and photos • Color, if the image is in color
Display on screen	75 ppi	• Black and White for text • Grayscale for graphics and photos • Color, if the image is in color

Color

You can set the color values to the following settings when scanning.

Table 9-15 Color settings

Setting	Recommended use
Color	Use this setting for high-quality color photos or documents in which the color is important.
Black and White	Use this setting for text documents.
Grayscale	Use this setting when file size is an issue or when you want to scan a document or photograph quickly.

Edge-to-edge copying

The printer cannot print fully edge-to-edge. There is a 4 mm (1/6 inch) unprintable border around the page.

Considerations for printing or scanning documents with cropped edges:

- When the original is smaller than the output size, move the original 4 mm (1/6 inch) away from the corner indicated by the icon on the scanner. Recopy or scan in this position.
- When the original is the size of the printed output that you want, use the Reduce/Enlarge feature to reduce the image so the copy is not cropped.

Clean the pickup rollers and separation pad in the document feeder

If the document feeder experiences paper handling problems, such as jams or multiple-page feeds, clean the document feeder rollers and separation pad.

1. Open the document feeder cover.

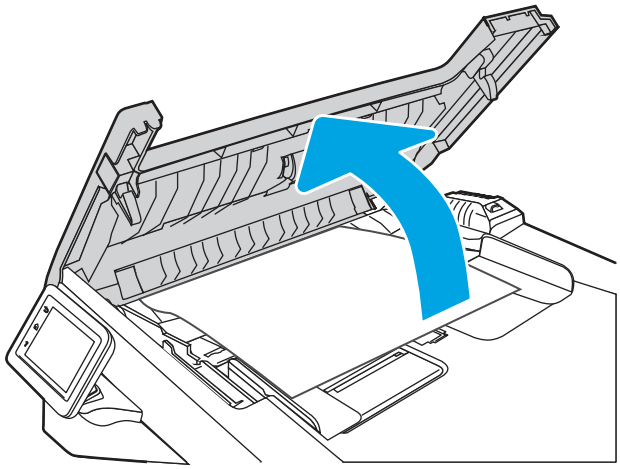

2. Use a moist, lint-free cloth to wipe both pickup rollers and the separation pad to remove dirt.

⚠ CAUTION: Do not use abrasives, acetone, benzene, ammonia, ethyl alcohol, or carbon tetrachloride on any part of the printer; these can damage the printer. Do not place liquids directly on the glass or platen. They might seep and damage the printer.

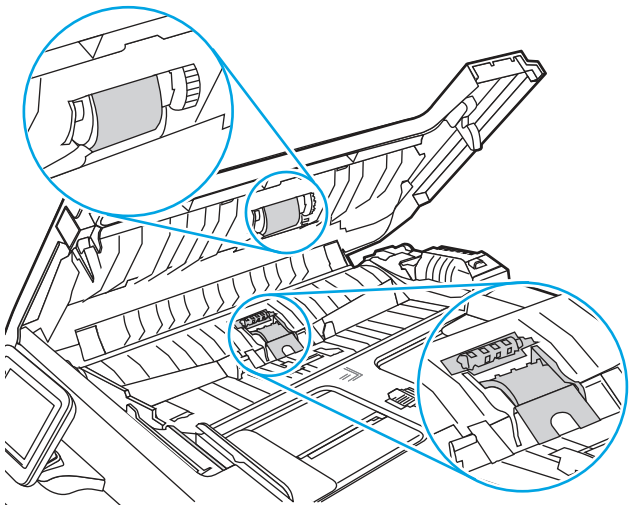

3. Close the document feeder cover.

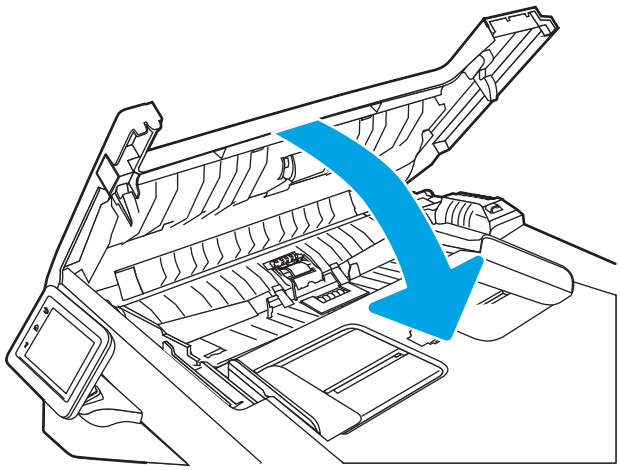

Improve fax image quality

Review the following information to improve fax image quality.

Introduction

If the printer is having image quality problems, try the following solutions in the order presented to resolve the issue.

Try these few simple steps first:

- Use the flatbed scanner rather than the document feeder.
- Use high-quality originals.
- When using the document feeder, load the original document into the feeder correctly, using the paper guides, to avoid unclear or skewed images.

If the problem still exists, try these additional solutions. If they do not fix the problem, see "Improve print quality" for further solutions.

Check the scanner glass for dirt and smudges

Over time, specks of debris might collect on the scanner glass and white plastic backing, which can affect performance. Use the following procedure to clean the scanner.

1. Press the Power button to turn off the printer, and then disconnect the power cable from the electrical outlet.
2. Open the scanner lid.
3. Clean the scanner glass and the white plastic backing underneath the scanner lid with a soft cloth or sponge that has been moistened with nonabrasive glass cleaner.

   ⚠ CAUTION: Do not use abrasives, acetone, benzene, ammonia, ethyl alcohol, or carbon tetrachloride on any part of the printer; these can damage the printer. Do not place liquids directly on the glass or platen. They might seep and damage the printer.

4. Dry the glass and white plastic parts with a chamois or a cellulose sponge to prevent spotting.
5. Connect the power cable to an outlet, and then press the Power button to turn on the printer.

Check the send-fax resolution settings

If the printer was unable to send a fax because the receiving fax machine did not answer or was busy, the printer attempts to redial based on the redial-on-busy, redial-on-no-answer, and redial-on-communication-error options.

1. From the Home screen on the printer control panel, swipe right and touch the Fax icon.
2. Touch Send Now, and then touch the Settings icon ⚙.
3. Touch Resolution, and then touch the desired setting.

   Try the **Standard** resolution setting if the fax will not send with a higher resolution.

Check the Error Correction Mode setting

Usually, the printer monitors the signals on the telephone line while it is sending or receiving a fax. If the printer detects an error during the transmission and the Error Correction Mode setting is On, the printer can request that the portion of the fax be resent. The factory-set default for error correction is On.

You should turn off error correction only if you are having trouble sending or receiving a fax, and you are willing to accept the errors in the transmission. Turning off the setting might be useful when you are trying to send a fax overseas or receive one from overseas, or if you are using a satellite telephone connection.

1. From the Home screen on the printer control panel, swipe right and then touch the Fax icon.
2. Swipe right and touch the Setup icon.
3. Touch Preferences.
4. Scroll to Error Correction Mode and then touch the button to turn the setting off or on.

Send to a different fax machine

Try sending the fax to a different fax machine. If the fax quality is better, the problem is related to the initial recipient's fax machine settings or supplies status.

Check the sender's fax machine

Ask the sender to try sending from a different fax machine. If the fax quality is better, the problem is with the sender's fax machine. If a different fax machine is unavailable, ask the sender to consider making the following changes:

- Make sure the original document is on white (not colored) paper.
- Increase the fax resolution, quality level, or contrast settings.
- If possible, send the fax from a computer software program.

Solve wired network problems

Check the following information to resolve wired network issues.

Introduction

Certain types of problems can indicate there is a network communication problem. These problems include the following issues:

Poor physical connection

Check the cable connections.

1. Verify that the printer is attached to the correct network port using a cable of the correct length.
2. Verify that cable connections are secure.
3. Look at the network port connection on the back of the printer, and verify that the amber activity light flashes indicating network traffic, and the green link-status light is continuously lit indicating a network link.

4. If the problem continues, try a different cable or port on the hub.

The computer is using the incorrect IP address for the printer

If the computer is using the incorrect IP address for the printer, try these solutions.

1. Open the printer properties and click the **Ports** tab. Verify that the current IP address for the printer is selected. The printer IP address is listed on the printer configuration page.
2. If you installed the printer using the HP standard TCP/IP port, select the check box next to **Always print to this printer, even if its IP address changes**.
3. If you installed the printer using a Microsoft standard TCP/IP port, use the hostname instead of the IP address.
4. If the IP address is correct, delete the printer and then add it again.

The computer is unable to communicate with the printer

Verify that the printer is communicating with the network and your computer.

1. Test network communication by pinging the network.
   a. Open a command-line prompt on your computer.
      - For Windows, click **Start**, click **Run**, type `cmd`, and then press Enter.
      - For macOS, go to **Applications**, then **Utilities**, and open **Terminal**.
   b. Type `ping` followed by the IP address for your printer.
   c. If the window displays round-trip times, the network is working.
2. If the ping command failed, verify that the network hubs are on, and then verify that the network settings, the printer, and the computer are all configured for the same network (also known as subnet).
3. If the network is working, make sure that the computer is using the correct IP address for the printer.
   a. Open the printer properties and click the **Ports** tab. Verify that the current IP address for the printer is selected. The printer IP address is listed on the printer configuration page.
   b. If you installed the printer using the HP standard TCP/IP port, select the box labeled **Always print to this printer, even if its IP address changes**.
   c. If you installed the printer using a Microsoft standard TCP/IP port, use the printer's hostname instead of the IP address.
   d. If the IP address is correct, delete the printer and then add it again.

The printer is using incorrect link and duplex settings for the network

HP recommends leaving these settings in automatic mode (the default setting). If you change these settings, you must also change them for your network.

New software programs might be causing compatibility problems

Verify that any new software programs are correctly installed and that they use the correct print driver.

The computer or workstation might be set up incorrectly

An incorrectly configured computer can cause issues with printing.

1. Check the network drivers, print drivers, and the network redirection settings.
2. Verify that the operating system is configured correctly.

The printer is disabled, or other network settings are incorrect

Check the network settings.

1. Review the printer's configuration/networking pages to check the status of the network settings and protocols.
2. Reconfigure the network settings if necessary.

Solve wireless network problems

To resolve network issues, try these steps in the order presented.

Introduction

Use the troubleshooting information to help resolve issues.

NOTE: To determine whether Wi-Fi Direct printing is enabled on your printer, print a configuration page from the printer control panel

Wireless connectivity checklist

Review the following information to check wireless connectivity.

- Verify that the network cable is not connected.
- Verify that the printer and the wireless router are turned on and have power. Also make sure that the wireless radio in the printer is turned on.
- Verify that the service set identifier (SSID) is correct. Print a configuration page to determine the SSID. If you are not sure the SSID is correct, run the wireless setup again.
- With secured networks, verify that the security information is correct. If the security information is incorrect, run the wireless setup again.
- If the wireless network is working correctly, try accessing other computers on the wireless network. If the network has Internet access, try connecting to the Internet over a wireless connection.
- Verify that the encryption method (AES or TKIP) is the same for the printer as it is for the wireless access point (on networks using WPA security).
- Verify that the printer is within the range of the wireless network. For most networks, the printer must be within 30 m (100 ft) of the wireless access point (wireless router).

- Verify that obstacles do not block the wireless signal. Remove any large metal objects between the access point and the printer. Make sure poles, walls, or support columns containing metal or concrete do not separate the printer and wireless access point.
- Verify that the printer is located away from electronic devices that might interfere with the wireless signal. Many devices can interfere with the wireless signal including motors, cordless phones, security system cameras, other wireless networks, and some Bluetooth devices.
- Verify that the print driver is installed on the computer.
- Verify that you have selected the correct printer port.
- Verify that the computer and printer connect to the same wireless network.
- For macOS, verify that the wireless router supports Bonjour.

The printer does not print after the wireless configuration completes

If the printer does not print after the wireless configuration completes, try these solutions.

1. Make sure that the printer is turned on and in the ready state.
2. Turn off any third-party firewalls on your computer.
3. Make sure that the wireless network is working correctly.
4. Make sure that your computer is working correctly. If necessary, restart the computer.
5. Verify that you can open the printer HP Embedded Web Server from a computer on the network.

The printer does not print, and the computer has a third-party firewall installed

If the printer does not print, and the computer has a third-party firewall installed, try these solutions.

1. Update the firewall with the most recent update available from the manufacturer.
2. If programs request firewall access when you install the printer or try to print, make sure you allow the programs to run.
3. Temporarily turn off the firewall, and then install the wireless printer on the computer. Enable the firewall when you have completed the wireless installation.

The wireless connection does not work after moving the wireless router or printer

If the wireless connection does not work after moving the wireless router or printer, try these solutions.

1. Make sure that the router or printer connects to the same network that your computer connects to.
2. Print a configuration page.
3. Compare the service set identifier (SSID) on the configuration page to the SSID in the printer configuration for the computer.
4. If the numbers are not the same, the devices are not connecting to the same network. Reconfigure the wireless setup for the printer.

Cannot connect more computers to the wireless printer

If additional computers cannot connect to the wireless printer, try these solutions.

1. Make sure that the other computers are within the wireless range and that no obstacles block the signal. For most networks, the wireless range is within 30 m (100 ft) of the wireless access point.
2. Make sure that the printer is turned on and in the ready state.
3. Make sure there are not more than 5 concurrent Wi-Fi Direct users.
4. Turn off any third-party firewalls on your computer.
5. Make sure that the wireless network is working correctly.
6. Make sure that your computer is working correctly. If necessary, restart the computer.

The wireless printer loses communication when connected to a VPN

Typically, you cannot connect to a VPN and other networks at the same time.

The network does not appear in the wireless networks list

If the network does not appear in the wireless networks list, try these solutions.

- Make sure the wireless router is turned on and has power.
- The network might be hidden. However, you can still connect to a hidden network.

The wireless network is not functioning

If the wireless network is not functioning, try these solutions.

1. Make sure that the network cable is not connected.
2. To verify if the network has lost communication, try connecting other devices to the network.
3. Test network communication by pinging the network.
   a. Open a command-line prompt on your computer.
      - For Windows, click **Start**, click **Run**, type `cmd`, and then press Enter.
      - For macOS, go to **Applications**, then **Utilities**, and open **Terminal**.
   b. Type `ping` followed by the router IP address.
   c. If the window displays round-trip times, the network is working.
4. Make sure that the router or printer connects to the same network that the computer connects to.
   a. Print a configuration page.
   b. Compare the service set identifier (SSID) on the configuration report to the SSID in the printer configuration for the computer.
   c. If the numbers are not the same, the devices are not connecting to the same network. Reconfigure the wireless setup for the printer.

Perform a wireless network diagnostic test

From the printer control panel, you can run a diagnostic test that provides information about the wireless network settings.

1. From the Home screen on the printer control panel, swipe the tab at the top of the screen downward to open the Dashboard, and then touch the Setup icon ⚙.
2. Scroll to and touch Reports.
3. Scroll to and touch Wireless Test Report.

   The printer prints a test page that shows test results.

Reduce interference on a wireless network

The following tips can reduce interference in a wireless network:

- Keep the wireless devices away from large metal objects, such as filing cabinets, and other electromagnetic devices, such as microwaves and cordless telephones. These objects can disrupt radio signals.
- Keep the wireless devices away from large masonry structures and other building structures. These objects can absorb radio waves and lower signal strength.
- Position the wireless router in a central location in line of sight with the wireless printers on the network.

Solve fax problems

Use the following information to solve fax problems.

Introduction

Use the fax troubleshooting information to help resolve issues.

Fax troubleshooting checklist

After each recommended action, retry faxing to see if the problem is resolved.

For best results during fax problem solving, make sure the line from the printer is connected directly to the wall phone port. Disconnect all other devices that are connected to the printer.

1. Verify that the telephone cord is connected to the correct port on the back of the printer.
2. Check the phone line by using the fax test:
   a. From the Home screen on the printer control panel, swipe the tab at the top of the screen downward to open the Dashboard, and then touch the Setup icon ⚙.
   b. Scroll to and open the following menus:
      i. Fax Setup
      ii. Tools
      iii. Run Fax Test

      The printer prints a fax test report.

      The report contains the following possible results:

      - **Pass**: The report contains all of the current fax settings for review.

- **Fail**: The report indicates the nature of the error and contains suggestions for how to resolve the issue.

3. Verify that the printer firmware is current:

NOTE: To determine the current firmware version on your printer, print a Printer Status Report from the printer control panel, and then look on the report to find the firmware date code. Then visit the HP product support page (using the steps below) and compare the firmware date code to the latest firmware version that is available from HP. If there is a newer version available, follow the steps below to update the firmware on your printer.

   a. Go to www.hp.com/go/support, click the **Drivers & Software** link, type the printer name in the search field, press the ENTER button, and then select the printer from the list of search results.

   b. Select the operating system.

   c. Under the **Firmware** section, locate the **Firmware Update Utility**.

   NOTE: Make sure to use the firmware update utility that is specific to the printer model.

   d. Click **Download**, click **Run**, and then click **Run** again.

   e. When the utility launches, select the printer from the drop-down list, and then click **Send Firmware**.

   f. Follow the on-screen instructions to complete the installation, and then click the **Exit** button to close the utility.

4. Verify that the fax was set up when the printer software was installed.

   From the computer, in the HP program folder, run the Fax Setup Utility.

5. Verify that the telephone service supports analog fax.

   - If using ISDN or digital PBX, contact your service provider for information about configuring to an analog fax line.
   - If using a VoIP service, change the Fax Speed setting to Speed-Slow (9600 bps). From the control panel Home Screen, select Fax, select Setup, and then select Preferences.
   - Ask if your service provider supports fax, and what the recommended fax modem speed is. Some companies might require an adapter.
   - If you are using a DSL service, make sure that a filter is included on the phone-line connection to the printer. Contact the DSL service provider, or purchase a DSL filter if you do not have one. If a DSL filter is installed, try another filter because filters can be defective.

Solve general fax problems

Review suggestions and tips for resolving various fax-related issues.

Faxes are sending slowly

The printer is experiencing poor phone line quality.

Try the following suggestions to resolve the issue:

- Try resending the fax when the line conditions have improved.

- Check with the phone service provider to verify that the line supports fax.
- Turn off the Error Correction Mode setting:
  1. From the Home screen on the printer control panel, swipe right and then touch the Fax icon.
  2. Swipe right and touch the Setup icon.
  3. Touch Preferences.
  4. Scroll to Error Correction Mode and then touch the button to turn off the setting.

NOTE: This can reduce image quality.

- Use white paper for the original. Do not use colors such as gray, yellow, or pink.
- Increase the Fax Speed setting:
  1. From the Home screen on the printer control panel, swipe right and then touch the Fax icon.
  2. Swipe right and touch the Setup icon.
  3. Touch Preferences, and then scroll to and touch Speed.
  4. Touch the desired speed setting.
- Divide large fax jobs into smaller sections, and then fax them individually.

Fax quality is poor

Faxes are blurry or too light.

Try the following suggestions to resolve the issue:

- Increase fax resolution when sending faxes:

NOTE: Resolution does not affect received faxes.

  1. From the Home screen on the printer control panel, swipe right and then touch the Fax icon.
  2. Touch the Send Now icon.
  3. Touch the Settings icon , and then touch Resolution.
  4. Touch the desired resolution setting.

NOTE: Increasing resolution slows transmission speed.

- Turn on the Error Correction Mode setting:
  1. From the Home screen on the printer control panel, swipe right and then touch the Fax icon.
  2. Swipe right and touch the Setup icon.
  3. Touch Preferences.
  4. Scroll to Error Correction Mode and then touch the button to turn on the setting.
- Check the toner cartridges and replace if necessary.

- Ask the sender to darken the contrast setting on the sending fax machine, and then resend the fax.

Fax cuts off or prints on two pages

If the paper size settings on the printer do not match the paper size of the document being faxed, the received fax might be missing content, or it could print on two pages.

Try the following suggestions to resolve the issue:

- Set the Default Paper Size setting:

NOTE: Faxes print on a single size of paper based on the Default Paper Size settings.

1. From the Home screen on the printer control panel, swipe the tab at the top of the screen downward to open the Dashboard, and then touch the Setup icon .
2. Scroll to and open the following menus:
   a. Tray Management
   b. Tray Assignment
   c. Default Paper Size
3. Touch the desired paper size from the list of options.

- Set the paper type and size for the tray that is used for faxes.

A Service and support

HP limited warranty statement

HP PRODUCT	DURATION OF LIMITED WARRANTY*
HP LaserJet Pro MFP 4101, 4102	One-year return to bench

NOTE: *Warranty and support options vary by product, country, and local legal requirements. Go to support.hp.com to learn about HP award-winning service and support options in your region.

HP warrants to you, the end-user customer, this HP Limited Warranty applies only to HP branded products sold or leased a) from HP Inc., its subsidiaries, affiliates, authorized resellers, authorized distributors, or country distributors; and, b) with this HP Limited Warranty, that HP hardware and accessories will be free from defects in materials and workmanship after the date of purchase, for the period specified above. If HP receives notice of such defects during the warranty period, HP will, at its option, either repair or replace products which prove to be defective. Replacement products may be either new or equivalent in performance to new.

HP warrants to you that HP software will not fail to execute its programming instructions after the date of purchase, for the period specified above, due to defects in material and workmanship when properly installed and used. If HP receives notice of such defects during the warranty period, HP will replace software which does not execute its programming instructions due to such defects.

HP does not warrant that the operation of HP products will be uninterrupted or error free. If HP is unable, within a reasonable time, to repair or replace any product to a condition as warranted, you will be entitled to a refund of the purchase price upon prompt return of the product.

HP products may contain remanufactured parts equivalent to new in performance or may have been subject to incidental use.

Warranty does not apply to defects resulting from (a) improper or inadequate maintenance or calibration, (b) software, interfacing, parts or supplies not supplied by HP, (c) unauthorized modification or misuse, (d) operation outside of the published environmental specifications for the product, or (e) improper site preparation or maintenance.

TO THE EXTENT ALLOWED BY LOCAL LAW, THE ABOVE WARRANTIES ARE EXCLUSIVE AND NO OTHER WARRANTY OR CONDITION, WHETHER WRITTEN OR ORAL, IS EXPRESSED OR IMPLIED AND HP SPECIFICALLY DISCLAIMS ANY IMPLIED WARRANTIES OR CONDITIONS OF MERCHANTABILITY, SATISFACTORY QUALITY, AND FITNESS FOR A PARTICULAR PURPOSE. Some countries/regions, states or provinces do not allow limitations on the duration of an implied warranty, so the above limitation or exclusion might not apply to you. This warranty gives you specific legal rights and you might also have other rights that vary from country/region to country/region, state to state, or province to province.

HP's limited warranty is valid in any country/region or locality where HP has a support presence for this product and where HP has marketed this product. The level of warranty service you receive may vary according to local standards. HP will not alter form, fit or function of the product to make it operate in a country/region for which it was never intended to function for legal or regulatory reasons.

TO THE EXTENT ALLOWED BY LOCAL LAW, THE REMEDIES IN THIS WARRANTY STATEMENT ARE YOUR SOLE AND EXCLUSIVE REMEDIES. EXCEPT AS INDICATED ABOVE, IN NO EVENT WILL HP OR ITS SUPPLIERS BE LIABLE FOR LOSS OF DATA OR FOR DIRECT, SPECIAL, INCIDENTAL, CONSEQUENTIAL (INCLUDING LOST PROFIT OR DATA), OR OTHER DAMAGE, WHETHER BASED IN CONTRACT, TORT, OR OTHERWISE. Some countries/regions, states or provinces do not allow the exclusion or limitation of incidental or consequential damages, so the above limitation or exclusion may not apply to you.

THE WARRANTY TERMS CONTAINED IN THIS STATEMENT, EXCEPT TO THE EXTENT LAWFULLY PERMITTED, DO NOT EXCLUDE, RESTRICT OR MODIFY AND ARE IN ADDITION TO THE MANDATORY STATUTORY RIGHTS APPLICABLE TO THE SALE OF THIS PRODUCT TO YOU.

UK, Ireland, and Malta

The HP Limited Warranty is a commercial guarantee voluntarily provided by HP. The name and address of the HP entity responsible for the performance of the HP Limited Warranty in your country/region is as follows:

UK: HP Inc UK Limited, Cain Road, Amen Corner, Bracknell, Berkshire, RG12 1HN

Ireland: Hewlett-Packard Ireland Limited, Liffey Park Technology Campus, Barnhall Road, Leixlip, Co.Kildare

Malta: Hewlett-Packard Europe B.V., Amsterdam, Meyrin Branch, Route du Nant-d'Avril 150, 1217 Meyrin, Switzerland

United Kingdom: The HP Limited Warranty benefits apply in addition to any legal rights to a guarantee from seller of nonconformity of goods with the contract of sale. These rights expire six years from delivery of goods for products purchased in England or Wales and five years from delivery of goods for products purchased in Scotland. However various factors may impact your eligibility to receive these rights. For further information, please consult the following link: Consumer Legal Guarantee (www.hp.com/go/eu-legal) or you may visit the European Consumer Centers website (http://ec.europa.eu/consumers/solving_consumer_disputes/non-judicial_redress/ecc-net/index_en.htm). Consumers have the right to choose whether to claim service under the HP Limited Warranty or against the seller under the legal guarantee.

Ireland: The HP Limited Warranty benefits apply in addition to any statutory rights from seller in relation to nonconformity of goods with the contract of sale. However various factors may impact your eligibility to receive these rights. Consumer statutory rights are not limited or affected in any manner by HP Care Pack. For further information, please consult the following link: Consumer Legal Guarantee (www.hp.com/go/eu-legal) or you may visit the European Consumer Centers website (http://ec.europa.eu/consumers/solving_consumer_disputes/non-judicial_redress/ecc-net/index_en.htm). Consumers have the right to choose whether to claim service under the HP Limited Warranty or against the seller under the legal guarantee.

Malta: The HP Limited Warranty benefits apply in addition to any legal rights to a two-year guarantee from seller of nonconformity of goods with the contract of sale; however various factors may impact your eligibility to receive these rights. Consumer statutory rights are not limited or affected in any manner by the HP Limited Warranty. For further information, please consult the following link: Consumer Legal Guarantee (www.hp.com/go/eu-legal) or you may visit the European Consumer Centers website (http://ec.europa.eu/consumers/solving_consumer_disputes/non-judicial_redress/ecc-net/index_en.htm). Consumers have the right to choose whether to claim service under the HP Limited Warranty or against the seller under two-year legal guarantee.

Austria, Belgium, Germany, and Luxemburg

Die beschränkte HP Herstellergarantie ist eine von HP auf freiwilliger Basis angebotene kommerzielle Garantie. Der Name und die Adresse der HP Gesellschaft, die in Ihrem Land für die Gewährung der beschränkten HP Herstellergarantie verantwortlich ist, sind wie folgt:

Deutschland: HP Deutschland GmbH, Schickardstr. 32, D-71034 Böblingen

Österreich: HP Austria GmbH., Technologiestrasse 5, A-1120 Wien

Luxemburg: Hewlett-Packard Luxembourg S.C.A., 75, Parc d'Activités Capellen, Rue Pafebruc, L-8308 Capellen

Belgien: HP Belgium BVBA, Hermeslaan 1A, B-1831 Diegem

Die Rechte aus der beschränkten HP Herstellergarantie gelten zusätzlich zu den gesetzlichen Ansprüchen wegen Sachmängeln auf eine zweijährige Gewährleistung ab dem Lieferdatum. Ob Sie Anspruch auf diese Rechte haben, hängt von zahlreichen Faktoren ab. Die Rechte des Kunden sind in keiner Weise durch die beschränkte HP Herstellergarantie eingeschränkt bzw. betroffen. Weitere Hinweise finden Sie auf der folgenden Website: Gewährleistungsansprüche für Verbraucher (www.hp.com/go/eu-legal) oder Sie können die Website des Europäischen Verbraucherzentrums (http://ec.europa.eu/consumers/solving_consumer_disputes/non-judicial_redress/ecc-net/index_en.htm) besuchen. Verbraucher haben das Recht zu wählen, ob sie eine Leistung von HP gemäß der beschränkten HP Herstellergarantie in Anspruch nehmen oder ob sie sich gemäß der gesetzlichen zweijährigen Haftung für Sachmängel (Gewährleistung) sich an den jeweiligen Verkäufer wenden.

Belgium, France, and Luxemburg

La garantie limitée HP est une garantie commerciale fournie volontairement par HP. Voici les coordonnées de l'entité HP responsable de l'exécution de la garantie limitée HP dans votre pays:

France: HP France SAS, société par actions simplifiée identifiée sous le numéro 448 694 133 RCS Evry, 1 Avenue du Canada, 91947, Les Ulis

G.D. Luxembourg: Hewlett-Packard Luxembourg S.C.A., 75, Parc d'Activités Capellen, Rue Pafebruc, L-8308 Capellen

Belgique: HP Belgium BVBA, Hermeslaan 1A, B-1831 Diegem

France: Les avantages de la garantie limitée HP s'appliquent en complément des droits dont vous disposez au titre des garanties légales applicables dont le bénéfice est soumis à des conditions spécifiques. Vos droits en tant que consommateur au titre de la garantie légale de conformité mentionnée aux articles L. 211-4 à L. 211-13 du Code de la Consommation et de celle relatives aux défauts de la chose vendue, dans les conditions prévues aux articles 1641 à 1648 et 2232 du Code de Commerce ne sont en aucune façon limités ou affectés par la garantie limitée HP. Pour de plus amples informations, veuillez consulter le lien suivant : Garanties légales accordées au consommateur (www.hp.com/go/eu-legal). Vous pouvez également consulter le site Web des Centres européens des consommateurs (http://ec.europa.eu/consumers/solving_consumer_disputes/non-judicial_redress/ecc-net/index_en.htm). Les consommateurs ont le droit de choisir d'exercer leurs droits au titre de la garantie limitée HP, ou auprès du vendeur au titre des garanties légales applicables mentionnées ci-dessus.

POUR RAPPEL:

Garantie Légale de Conformité:

« Le vendeur est tenu de livrer un bien conforme au contrat et répond des défauts de conformité existant lors de la délivrance.

Il répond également des défauts de conformité résultant de l'emballage, des instructions de montage ou de l'installation lorsque celle-ci a été mise à sa charge par le contrat ou a été réalisée sous sa responsabilité ».

Article L211-5 du Code de la Consommation:

« Pour être conforme au contrat, le bien doit:

1° Etre propre à l'usage habituellement attendu d'un bien semblable et, le cas échéant:

- correspondre à la description donnée par le vendeur et posséder les qualités que celui-ci a présentées à l'acheteur sous forme d'échantillon ou de modèle;

- présenter les qualités qu'un acheteur peut légitimement attendre eu égard aux déclarations publiques faites par le vendeur, par le producteur ou par son représentant, notamment dans la publicité ou l'étiquetage;

2° Ou présenter les caractéristiques définies d'un commun accord par les parties ou être propre à tout usage spécial recherché par l'acheteur, porté à la connaissance du vendeur et que ce dernier a accepté ».

Article L211-12 du Code de la Consommation:

« L'action résultant du défaut de conformité se prescrit par deux ans à compter de la délivrance du bien ».

Garantie des vices cachés

Article 1641 du Code Civil : *« Le vendeur est tenu de la garantie à raison des défauts cachés de la chose vendue qui la rendent impropre à l'usage auquel on la destine, ou qui diminuent tellement cet usage que l'acheteur ne l'aurait pas acquise, ou n'en aurait donné qu'un moindre prix, s'il les avait connus. »*

Article 1648 alinéa 1 du Code Civil:

« L'action résultant des vices rédhibitoires doit être intentée par l'acquéreur dans un délai de deux ans à compter de la découverte du vice. »

G.D. Luxembourg et Belgique: Les avantages de la garantie limitée HP s'appliquent en complément des droits dont vous disposez au titre de la garantie de non-conformité des biens avec le contrat de vente. Cependant, de nombreux facteurs peuvent avoir un impact sur le bénéfice de ces droits. Vos droits en tant que consommateur au titre de ces garanties ne sont en aucune façon limités ou affectés par la garantie limitée HP. Pour de plus amples informations, veuillez consulter le lien suivant: Garanties légales accordées au consommateur (www.hp.com/go/eu-legal) ou vous pouvez également consulter le site Web des Centres européens des consommateurs (http://ec.europa.eu/consumers/solving_consumer_disputes/non-judicial_redress/ecc-net/index_en.htm). Les consommateurs ont le droit de choisir de réclamer un service sous la garantie limitée HP ou auprès du vendeur au cours d'une garantie légale de deux ans.

Italy

La Garanzia limitata HP è una garanzia commerciale fornita volontariamente da HP. Di seguito sono indicati nome e indirizzo della società HP responsabile della fornitura dei servizi coperti dalla Garanzia limitata HP nel vostro Paese:

Italia: HP Italy S.r.l., Via Carlo Donat Cattin,5 20063 Cernusco S/Naviglio

I vantaggi della Garanzia limitata HP vengono concessi ai consumatori in aggiunta ai diritti derivanti dalla garanzia di due anni fornita dal venditore in caso di non conformità dei beni rispetto al

contratto di vendita. Tuttavia, diversi fattori possono avere un impatto sulla possibilita' di beneficiare di tali diritti. I diritti spettanti ai consumatori in forza della garanzia legale non sono in alcun modo limitati, né modificati dalla Garanzia limitata HP. Per ulteriori informazioni, si prega di consultare il seguente link: Garanzia legale per i clienti (www.hp.com/go/eu-legal), oppure visitare il sito Web dei Centri europei per i consumatori (http://ec.europa.eu/consumers/solving_consumer_disputes/non-judicial_redress/ecc-net/index_en.htm). I consumatori hanno il diritto di scegliere se richiedere un servizio usufruendo della Garanzia limitata HP oppure rivolgendosi al venditore per far valere la garanzia legale di due anni.

Spain

Su Garantía limitada de HP es una garantía comercial voluntariamente proporcionada por HP. El nombre y dirección de las entidades HP que proporcionan la Garantía limitada de HP (garantía comercial adicional del fabricante) en su país es:

España: Hewlett-Packard Española S.L. Calle Vicente Aleixandre, 1 Parque Empresarial Madrid - Las Rozas, E-28232 Madrid

Los beneficios de la Garantía limitada de HP son adicionales a la garantía legal de 2 años a la que los consumidores tienen derecho a recibir del vendedor en virtud del contrato de compraventa; sin embargo, varios factores pueden afectar su derecho a recibir los beneficios bajo dicha garantía legal. A este respecto, la Garantía limitada de HP no limita o afecta en modo alguno los derechos legales del consumidor (www.hp.com/go/eu-legal). Para más información, consulte el siguiente enlace: Garantía legal del consumidor o puede visitar el sitio web de los Centros europeos de los consumidores (http://ec.europa.eu/consumers/solving_consumer_disputes/non-judicial_redress/ecc-net/index_en.htm). Los clientes tienen derecho a elegir si reclaman un servicio acogiéndose a la Garantía limitada de HP o al vendedor de conformidad con la garantía legal de dos años.

Denmark

Den begrænsede HP-garanti er en garanti, der ydes frivilligt af HP. Navn og adresse på det HP-selskab, der er ansvarligt for HP's begrænsede garanti i dit land, er som følger:

Danmark: HP Inc Danmark ApS, Engholm Parkvej 8, 3450, Allerød

Den begrænsede HP-garanti gælder i tillæg til eventuelle juridiske rettigheder, for en toårig garanti fra sælgeren af varer, der ikke er i overensstemmelse med salgsaftalen, men forskellige faktorer kan dog påvirke din ret til at opnå disse rettigheder. Forbrugerens lovbestemte rettigheder begrænses eller påvirkes ikke på nogen måde af den begrænsede HP-garanti. Se nedenstående link for at få yderligere oplysninger: Forbrugerens juridiske garanti (www.hp.com/go/eu-legal) eller du kan besøge De Europæiske Forbrugercentres websted (http://ec.europa.eu/consumers/solving_consumer_disputes/non-judicial_redress/ecc-net/index_en.htm). Forbrugere har ret til at vælge, om de vil gøre krav på service i henhold til HP's begrænsede garanti eller hos sælger i henhold til en toårig juridisk garanti.

Norway

HPs garanti er en begrenset og kommersiell garanti som HP selv har valgt å tilby. Følgende lokale selskap innestår for garantien:

Norge: HP Norge AS, Rolfbuktveien 4b, 1364 Fornebu

HPs garanti kommer i tillegg til det mangelsansvar HP har i henhold til norsk forbrukerkjøpslovgivning, hvor reklamasjonsperioden kan være to eller fem år, avhengig av hvor lenge salgsgjenstanden var ment å vare. Ulike faktorer kan imidlertid ha betydning for om du kvalifiserer til å kreve avhjelp iht slikt mangelsansvar. Forbrukerens lovmessige rettigheter begrenses ikke av HPs garanti. Hvis du vil ha mer informasjon, kan du klikke på følgende kobling: Juridisk garanti for forbruker (www.hp.com/go/eu-legal) eller du kan besøke nettstedet til de europeiske forbrukersentrene (http://ec.europa.eu/consumers/

solving_consumer_disputes/non-judicial_redress/ecc-net/index_en.htm). Forbrukere har retten til å velge å kreve service under HPs garanti eller iht selgerens lovpålagte mangelsansvar.

Sweden

HP:s begränsade garanti är en kommersiell garanti som tillhandahålls frivilligt av HP. Namn och adress till det HP-företag som ansvarar för HP:s begränsade garanti i ditt land är som följer:

Sverige: HP PPS Sverige AB, SE-169 73 Stockholm

Fördelarna som ingår i HP:s begränsade garanti gäller utöver de lagstadgade rättigheterna till tre års garanti från säljaren angående varans bristande överensstämmelse gentemot köpeavtalet, men olika faktorer kan påverka din rätt att utnyttja dessa rättigheter. Konsumentens lagstadgade rättigheter varken begränsas eller påverkas på något sätt av HP:s begränsade garanti. Mer information får du om du följer denna länk: Lagstadgad garanti för konsumenter (www.hp.com/go/eu-legal) eller så kan du gå till European Consumer Centers webbplats (http://ec.europa.eu/consumers/solving_consumer_disputes/non-judicial_redress/ecc-net/index_en.htm). Konsumenter har rätt att välja om de vill ställa krav enligt HP:s begränsade garanti eller på säljaren enligt den lagstadgade treåriga garantin.

Portugal

A Garantia Limitada HP é uma garantia comercial fornecida voluntariamente pela HP. O nome e a morada da entidade HP responsável pela prestação da Garantia Limitada HP no seu país são os seguintes:

Portugal: HPCP – Computing and Printing Portugal, Unipessoal, Lda., Edificio D. Sancho I, Quinta da Fonte, Porto Salvo, Lisboa, Oeiras, 2740 244

As vantagens da Garantia Limitada HP aplicam-se cumulativamente com quaisquer direitos decorrentes da legislação aplicável à garantia de dois anos do vendedor, relativa a defeitos do produto e constante do contrato de venda. Existem, contudo, vários fatores que poderão afetar a sua elegibilidade para beneficiar de tais direitos. Os direitos legalmente atribuídos aos consumidores não são limitados ou afetados de forma alguma pela Garantia Limitada HP. Para mais informações, consulte a ligação seguinte: Garantia legal do consumidor (www.hp.com/go/eu-legal) ou visite o Web site da Rede dos Centros Europeus do Consumidor (http://ec.europa.eu/consumers/solving_consumer_disputes/non-judicial_redress/ecc-net/index_en.htm). Os consumidores têm o direito de escolher se pretendem reclamar assistência ao abrigo da Garantia Limitada HP ou contra o vendedor ao abrigo de uma garantia jurídica de dois anos.

Greece and Cyprus

Η Περιορισμένη εγγύηση HP είναι μια εμπορική εγγύηση η οποία παρέχεται εθελοντικά από την HP. Η επωνυμία και η διεύθυνση του νομικού προσώπου HP που παρέχει την Περιορισμένη εγγύηση HP στη χώρα σας είναι η εξής:

Ελλάδα /Κύπρος: HP Printing and Personal Systems Hellas EPE, Tzavella 1-3, 15232 Chalandri, Attiki

Ελλάδα /Κύπρος: HP Συστήματα Εκτύπωσης και Προσωπικών Υπολογιστών Ελλάς Εταιρεία Περιορισμένης Ευθύνης, Tzavella 1-3, 15232 Chalandri, Attiki

Τα προνόμια της Περιορισμένης εγγύησης HP ισχύουν επιπλέον των νόμιμων δικαιωμάτων για διετή εγγύηση έναντι του Πωλητή για τη μη συμμόρφωση των προϊόντων με τις συνομολογημένες συμβατικά ιδιότητες, ωστόσο η άσκηση των δικαιωμάτων σας αυτών μπορεί να εξαρτάται από διάφορους παράγοντες. Τα νόμιμα δικαιώματα των καταναλωτών δεν περιορίζονται ούτε επηρεάζονται καθ' οιονδήποτε τρόπο από την Περιορισμένη εγγύηση HP. Για περισσότερες πληροφορίες, συμβουλευτείτε την ακόλουθη τοποθεσία web: Νόμιμη εγγύηση καταναλωτή (www.hp.com/go/eu-legal) ή μπορείτε να επισκεφτείτε την τοποθεσία web των Ευρωπαϊκών Κέντρων Καταναλωτή (http://ec.europa.eu/consumers/solving_consumer_disputes/non-judicial_redress/

ecc-net/index_en.htm). Οι καταναλωτές έχουν το δικαίωμα να επιλέξουν αν θα αξιώσουν την υπηρεσία στα πλαίσια της Περιορισμένης εγγύησης HP ή από τον πωλητή στα πλαίσια της νόμιμης εγγύησης δύο ετών.

Hungary

A HP korlátozott jótállás egy olyan kereskedelmi jótállás, amelyet a HP a saját elhatározásából biztosít. Az egyes országokban a HP mint gyártó által vállalt korlátozott jótállást biztosító HP vállalatok neve és címe:

Magyarország: HP Inc Magyarország Kft., H-1117 Budapest, Alíz utca 1.

A HP korlátozott jótállásban biztosított jogok azokon a jogokon felül illetik meg Önt, amelyek a termékeknek az adásvételi szerződés szerinti minőségére vonatkozó kétéves, jogszabályban foglalt eladói szavatosságból, továbbá ha az Ön által vásárolt termékre alkalmazandó, a jogszabályban foglalt kötelező eladói jótállásból erednek, azonban számos körülmény hatással lehet arra, hogy ezek a jogok Önt megilletik-e. További információért kérjük, keresse fel a következő webhelyet: Jogi Tájékoztató Fogyasztóknak (www.hp.com/go/eu-legal) vagy látogassa meg az Európai Fogyasztói Központok webhelyét (http://ec.europa.eu/consumers/solving_consumer_disputes/non-judicial_redress/ecc-net/index_en.htm). A fogyasztóknak jogában áll, hogy megválasszák, hogy a jótállással kapcsolatos igényüket a HP korlátozott jótállás alapján vagy a kétéves, jogszabályban foglalt eladói szavatosság, illetve, ha alkalmazandó, a jogszabályban foglalt kötelező eladói jótállás alapján érvényesítik.

Czech Republic

Omezená záruka HP je obchodní zárukou dobrovolně poskytovanou společností HP. Názvy a adresy společností skupiny HP, které odpovídají za plnění omezené záruky HP ve vaší zemi, jsou následující:

Česká republika: HP Inc Czech Republic s. r. o., Za Brumlovkou 5/1559, 140 00 Praha 4

Výhody, poskytované omezenou zárukou HP, se uplatňují jako doplňek k jakýmkoli právním nárokům na dvouletou záruku poskytnutou prodejcem v případě nesouladu zboží s kupní smlouvou. Váš nárok na uznání těchto práv však může záviset na mnohých faktorech. Omezená záruka HP žádným způsobem neomezuje ani neovlivňuje zákonná práva zákazníka. Další informace získáte kliknutím na následující odkaz: Zákonná záruka spotřebitele (www.hp.com/go/eu-legal) případně můžete navštívit webové stránky Evropského spotřebitelského centra (http://ec.europa.eu/consumers/solving_consumer_disputes/non-judicial_redress/ecc-net/index_en.htm). Spotřebitelé mají právo se rozhodnout, zda chtějí službu reklamovat v rámci omezené záruky HP nebo v rámci zákonem stanovené dvouleté záruky u prodejce.

Slovakia

Obmedzená záruka HP je obchodná záruka, ktorú spoločnosť HP poskytuje dobrovoľne. Meno a adresa subjektu HP, ktorý zabezpečuje plnenie vyplývajúce z Obmedzenej záruky HP vo vašej krajine:

Slovenská republika: HP Inc Slovakia, s.r.o., Galvaniho 7, 821 04 Bratislava

Výhody Obmedzenej záruky HP sa uplatnia vedľa prípadných zákazníkových zákonných nárokov voči predávajúcemu z vád, ktoré spočívajú v nesúlade vlastností tovaru s jeho popisom podľa predmetnej zmluvy. Možnosť uplatnenia takých prípadných nárokov však môže závisieť od rôznych faktorov. Služby Obmedzenej záruky HP žiadnym spôsobom neobmedzujú ani neovplyvňujú zákonné práva zákazníka, ktorý je spotrebiteľom. Ďalšie informácie nájdete na nasledujúcom prepojení: Zákonná záruka spotrebiteľa (www.hp.com/go/eu-legal), prípadne môžete navštíviť webovú lokalitu európskych zákazníckych stredísk (http://ec.europa.eu/consumers/solving_consumer_disputes/non-judicial_redress/ecc-net/index_en.htm). Spotrebitelia majú právo zvoliť si, či chcú uplatniť servis v rámci Obmedzenej záruky HP alebo počas zákonnej dvojročnej záručnej lehoty u predajcu.

Poland

Ograniczona gwarancja HP to komercyjna gwarancja udzielona dobrowolnie przez HP. Nazwa i adres podmiotu HP odpowiedzialnego za realizację Ograniczonej gwarancji HP w Polsce:

Polska: HP Inc Polska sp. z o.o., Szturmowa 2a, 02-678 Warszawa, wpisana do rejestru przedsiębiorców prowadzonego przez Sąd Rejonowy dla m.st. Warszawy w Warszawie, XIII Wydział Gospodarczy Krajowego Rejestru Sądowego, pod numerem KRS 0000546115, NIP 5213690563, REGON 360916326, GIOŚ E0020757WZBW, kapitał zakładowy 480.000 PLN.

Świadczenia wynikające z Ograniczonej gwarancji HP stanowią dodatek do praw przysługujących nabywcy w związku z dwuletnią odpowiedzialnością sprzedawcy z tytułu niezgodności towaru z umową (rękojmia). Niemniej, na możliwość korzystania z tych praw mają wpływ różne czynniki. Ograniczona gwarancja HP w żaden sposób nie ogranicza praw konsumenta ani na nie nie wpływa. Więcej informacji można znaleźć pod następującym łączem: Gwarancja prawna konsumenta (www.hp.com/go/eu-legal), można także odwiedzić stronę internetową Europejskiego Centrum Konsumenckiego (http://ec.europa.eu/consumers/solving_consumer_disputes/non-judicial_redress/ecc-net/index_en.htm). Konsumenci mają prawo wyboru co do możliwosci skorzystania albo z usług gwarancyjnych przysługujących w ramach Ograniczonej gwarancji HP albo z uprawnień wynikających z dwuletniej rękojmi w stosunku do sprzedawcy.

Bulgaria

Ограничената гаранция на HP представлява търговска гаранция, доброволно предоставяна от HP. Името и адресът на дружеството на HP за вашата страна, отговорно за предоставянето на гаранционната поддръжка в рамките на Ограничената гаранция на HP, са както следва:

HP Inc Bulgaria EOOD (Ейч Пи Инк България ЕООД), гр. София 1766, район р-н Младост, бул. Околовръстен Път No 258, Бизнес Център Камбаните

Предимствата на Ограничената гаранция на HP се прилагат в допълнение към всички законови права за двугодишна гаранция от продавача при несъответствие на стоката с договора за продажба. Въпреки това, различни фактори могат да окажат влияние върху условията за получаване на тези права. Законовите права на потребителите не са ограничени или засегнати по никакъв начин от Ограничената гаранция на HP. За допълнителна информация, моля вижте Правната гаранция на потребителя (www.hp.com/go/eu-legal) или посетете уебсайта на Европейския потребителски център (http://ec.europa.eu/consumers/solving_consumer_disputes/non-judicial_redress/ecc-net/index_en.htm). Потребителите имат правото да избират дали да претендират за извършване на услуга в рамките на Ограничената гаранция на HP или да потърсят такава от търговеца в рамките на двугодишната правна гаранция.

Romania

Garanția limitată HP este o garanție comercială furnizată în mod voluntar de către HP. Numele și adresa entității HP răspunzătoare de punerea în aplicare a Garanției limitate HP în țara dumneavoastră sunt următoarele:

România: HP Inc Romania SRL, 5 Fabrica de Glucoza Str., Building F, Ground Floor and Floor 8, 2nd District, București

Beneficiile Garanției limitate HP se aplică suplimentar față de orice drepturi privind garanția de doi ani oferită de vânzător pentru neconformitatea bunurilor cu contractul de vânzare; cu toate acestea, diverși factori pot avea impact asupra eligibilității dvs. de a beneficia de aceste drepturi. Drepturile legale ale consumatorului nu sunt limitate sau afectate în vreun fel de Garanția limitată HP. Pentru informații suplimentare consultați următorul link: garanția acordată consumatorului prin lege (www.hp.com/go/eu-legal) sau puteți accesa site-ul Centrul European al Consumatorilor (http://ec.europa.eu/consumers/solving_consumer_disputes/non-judicial_redress/ecc-net/index_en.htm). Consumatorii au dreptul să

aleagă dacă să pretindă despăgubiri în cadrul Garanței limitate HP sau de la vânzător, în cadrul garanției legale de doi ani.

Belgium and the Netherlands

De Beperkte Garantie van HP is een commerciële garantie vrijwillig verstrekt door HP. De naam en het adres van de HP-entiteit die verantwoordelijk is voor het uitvoeren van de Beperkte Garantie van HP in uw land is als volgt:

Nederland: HP Nederland B.V., Startbaan 16, 1187 XR Amstelveen

België: HP Belgium BVBA, Hermeslaan 1A, B-1831 Diegem

De voordelen van de Beperkte Garantie van HP vormen een aanvulling op de wettelijke garantie voor consumenten gedurende twee jaren na de levering te verlenen door de verkoper bij een gebrek aan conformiteit van de goederen met de relevante verkoopsovereenkomst. Niettemin kunnen diverse factoren een impact hebben op uw eventuele aanspraak op deze wettelijke rechten. De wettelijke rechten van de consument worden op geen enkele wijze beperkt of beïnvloed door de Beperkte Garantie van HP. Raadpleeg voor meer informatie de volgende webpagina: Wettelijke garantie van de consument (www.hp.com/go/eu-legal) of u kan de website van het Europees Consumenten Centrum bezoeken (http://ec.europa.eu/consumers/solving_consumer_disputes/non-judicial_redress/ecc-net/index_en.htm). Consumenten hebben het recht om te kiezen tussen enerzijds de Beperkte Garantie van HP of anderzijds het aanspreken van de verkoper in toepassing van de wettelijke garantie.

Finland

HP:n rajoitettu takuu on HP:n vapaaehtoisesti antama kaupallinen takuu. HP:n myöntämästä takuusta maassanne vastaavan HP:n edustajan yhteystiedot ovat:

Suomi: HP Finland Oy, Piispankalliontie, FIN - 02200 Espoo

HP:n takuun edut ovat voimassa mahdollisten kuluttajansuojalakiin perustuvien oikeuksien lisäksi sen varalta, että tuote ei vastaa myyntisopimusta. Saat lisätietoja seuraavasta linkistä: Kuluttajansuoja (www.hp.com/go/eu-legal) tai voit käydä Euroopan kuluttajakeskuksen sivustolla (http://ec.europa.eu/consumers/solving_consumer_disputes/non-judicial_redress/ecc-net/index_en.htm). Kuluttajilla on oikeus vaatia virheen korjausta HP:n takuun ja kuluttajansuojan perusteella HP:lta tai myyjältä.

Slovenia

Omejena garancija HP je prostovoljna trgovska garancija, ki jo zagotavlja podjetje HP. Ime in naslov poslovne enote HP, ki je odgovorna za omejeno garancijo HP v vaši državi, sta naslednja:

Slovenija: Hewlett-Packard Europe B.V., Amsterdam, Meyrin Branch, Route du Nant-d'Avril 150, 1217 Meyrin, Switzerland

Ugodnosti omejene garancije HP veljajo poleg zakonskih pravic, ki ob sklenitvi kupoprodajne pogodbe izhajajo iz dveletne garancije prodajalca v primeru neskladnosti blaga, vendar lahko na izpolnjevanje pogojev za uveljavitev pravic vplivajo različni dejavniki. Omejena garancija HP nikakor ne omejuje strankinih z zakonom predpisanih pravic in ne vpliva nanje. Za dodatne informacije glejte naslednjo povezavo: Strankino pravno jamstvo (www.hp.com/go/eu-legal); ali pa obiščite spletno mesto evropskih središč za potrošnike (http://ec.europa.eu/consumers/solving_consumer_disputes/non-judicial_redress/ecc-net/index_en.htm). Potrošniki imajo pravico izbrati, ali bodo uveljavljali pravice do storitev v skladu z omejeno garancijo HP ali proti prodajalcu v skladu z dvoletno zakonsko garancijo.

Croatia

HP ograničeno jamstvo komercijalno je dobrovoljno jamstvo koje pruža HP. Ime i adresa HP subjekta odgovornog za HP ograničeno jamstvo u vašoj državi:

Hrvatska: HP Computing and Printing d.o.o. za računalne i srodne aktivnosti, Radnička cesta 41, 10000 Zagreb

Pogodnosti HP ograničenog jamstva vrijede zajedno uz sva zakonska prava na dvogodišnje jamstvo kod bilo kojeg prodavača s obzirom na nepodudaranje robe s ugovorom o kupnji. Međutim, razni faktori mogu utjecati na vašu mogućnost ostvarivanja tih prava. HP ograničeno jamstvo ni na koji način ne utječe niti ne ograničava zakonska prava potrošača. Dodatne informacije potražite na ovoj adresi: Zakonsko jamstvo za potrošače (www.hp.com/go/eu-legal) ili možete posjetiti web-mjesto Europskih potrošačkih centara (http://ec.europa.eu/consumers/solving_consumer_disputes/non-judicial_redress/ecc-net/index_en.htm). Potrošači imaju pravo odabrati žele li ostvariti svoja potraživanja u sklopu HP ograničenog jamstva ili pravnog jamstva prodavača u trajanju ispod dvije godine.

Latvia

HP ierobežotā garantija ir komercgarantija, kuru brīvprātīgi nodrošina HP. HP uzņēmums, kas sniedz HP ierobežotās garantijas servisa nodrošinājumu jūsu valstī:

Latvija: HP Finland Oy, PO Box 515, 02201 Espoo, Finland

HP ierobežotās garantijas priekšrocības tiek piedāvātas papildus jebkurām likumīgajām tiesībām uz pārdevēja un/vai ražotāju nodrošinātu divu gadu garantiju gadījumā, ja preces neatbilst pirkuma līgumam, tomēr šo tiesību saņemšanu var ietekmēt vairāki faktori. HP ierobežotā garantija nekādā veidā neierobežo un neietekmē patērētāju likumīgās tiesības. Lai iegūtu plašāku informāciju, izmantojiet šo saiti: Patērētāju likumīgā garantija (www.hp.com/go/eu-legal) vai arī Eiropas Patērētāju tiesību aizsardzības centra tīmekļa vietni (http://ec.europa.eu/consumers/solving_consumer_disputes/non-judicial_redress/ecc-net/index_en.htm). Patērētājiem ir tiesības izvēlēties, vai pieprasīt servisa nodrošinājumu saskaņā ar HP ierobežoto garantiju, vai arī pārdevēja sniegto divu gadu garantiju.

Lithuania

HP ribotoji garantija yra HP savanoriškai teikiama komercinė garantija. Toliau pateikiami HP bendrovių, teikiančių HP garantiją (gamintojo garantiją) jūsų šalyje, pavadinimai ir adresai:

Lietuva: HP Finland Oy, PO Box 515, 02201 Espoo, Finland

HP ribotoji garantija papildomai taikoma kartu su bet kokiomis kitomis įstatymais nustatytomis teisėmis į pardavėjo suteikiamą dviejų metų laikotarpio garantiją dėl prekių atitikties pardavimo sutarčiai, tačiau tai, ar jums ši teisė bus suteikiama, gali priklausyti nuo įvairių aplinkybių. HP ribotoji garantija niekaip neapriboja ir neįtakoja įstatymais nustatytų vartotojo teisių. Daugiau informacijos rasite paspaudę šią nuorodą: Teisinė vartotojo garantija (www.hp.com/go/eu-legal) arba apsilankę Europos vartotojų centro internetinėje svetainėje (http://ec.europa.eu/consumers/solving_consumer_disputes/non-judicial_redress/ecc-net/index_en.htm). Vartotojai turi teisę prašyti atlikti techninį aptarnavimą pagal HP ribotąją garantiją arba pardavėjo teikiamą dviejų metų įstatymais nustatytą garantiją.

Estonia

HP piiratud garantii on HP poolt vabatahtlikult pakutav kaubanduslik garantii. HP piiratud garantii eest vastutab HP üksus aadressil:

Eesti: HP Finland Oy, PO Box 515, 02201 Espoo, Finland

HP piiratud garantii rakendub lisaks seaduses ettenähtud müüjapoolsele kaheaastasele garantiile, juhul kui toode ei vasta müügilepingu tingimustele. Siiski võib esineda asjaolusid, mille puhul teie jaoks need õigused ei pruugi kehtida. HP piiratud garantii ei piira ega mõjuta mingil moel tarbija seadusjärgseid õigusi. Lisateavet leiate järgmiselt lingilt: tarbija õiguslik garantii (www.hp.com/go/eu-legal) või võite külastada Euroopa tarbijakeskuste veebisaiti (http://ec.europa.eu/consumers/solving_consumer_disputes/non-judicial_redress/ecc-net/index_en.htm). Tarbijal on õigus valida, kas ta soovib kasutada HP piiratud garantiid või seadusega ette nähtud müüjapoolset kaheaastast garantiid.

Russia

Срок службы принтера для России

Срок службы данного принтера HP составляет пять лет в нормальных условиях эксплуатации. Срок службы отсчитывается с момента ввода принтера в эксплуатацию. В конце срока службы HP рекомендует посетить веб-сайт нашей службы поддержки по адресу http://www.hp.com/support и/или связаться с авторизованным поставщиком услуг HP для получения рекомендаций в отношении дальнейшего безопасного использования принтера.

HP's Premium Protection Warranty: LaserJet toner cartridge limited warranty statement

This HP product is warranted to be free from defects in materials and workmanship.

This warranty does not apply to products that (a) have been refilled, refurbished, remanufactured or tampered with in any way, (b) experience problems resulting from misuse, improper storage, or operation outside of the published environmental specifications for the printer product or (c) exhibit wear from ordinary use.

To obtain warranty service, please return the product to place of purchase (with a written description of the problem and print samples) or contact HP customer support. At HP's option, HP will either replace products that prove to be defective or refund your purchase price.

TO THE EXTENT ALLOWED BY LOCAL LAW, THE ABOVE WARRANTY IS EXCLUSIVE AND NO OTHER WARRANTY OR CONDITION, WHETHER WRITTEN OR ORAL, IS EXPRESSED OR IMPLIED AND HP SPECIFICALLY DISCLAIMS ANY IMPLIED WARRANTIES OR CONDITIONS OF MERCHANTABILITY, SATISFACTORY QUALITY, AND FITNESS FOR A PARTICULAR PURPOSE.

TO THE EXTENT ALLOWED BY LOCAL LAW, IN NO EVENT WILL HP OR ITS SUPPLIERS BE LIABLE FOR DIRECT, SPECIAL, INCIDENTAL, CONSEQUENTIAL (INCLUDING LOST PROFIT OR DATA), OR OTHER DAMAGE, WHETHER BASED IN CONTRACT, TORT, OR OTHERWISE.

THE WARRANTY TERMS CONTAINED IN THIS STATEMENT, EXCEPT TO THE EXTENT LAWFULLY PERMITTED, DO NOT EXCLUDE, RESTRICT OR MODIFY AND ARE IN ADDITION TO THE MANDATORY STATUTORY RIGHTS APPLICABLE TO THE SALE OF THIS PRODUCT TO YOU.

Long life consumable and maintenance kit limited warranty statement

This HP product is warranted to be free from defects in materials and workmanship until the earlier of a) the printer providing a low-life indicator on the control panel, or b) the expiration of the warranty period. Replacement Preventative Maintenance kits or LLCs products carry a 90 day parts only limited warranty, from the last purchase date.

This warranty does not apply to products that (a) have been refurbished, remanufactured or tampered with in any way, (b) experience problems resulting from misuse, improper storage, or operation outside of the published environmental specifications for the printer product or (c) exhibit wear from ordinary use.

To obtain warranty service, please return the product to place of purchase (with a written description of the problem) or contact HP customer support. At HP's option, HP will either replace products that prove to be defective or refund your purchase price.

TO THE EXTENT ALLOWED BY LOCAL LAW, THE ABOVE WARRANTY IS EXCLUSIVE AND NO OTHER WARRANTY OR CONDITION, WHETHER WRITTEN OR ORAL, IS EXPRESSED OR IMPLIED. HP SPECIFICALLY DISCLAIMS ANY IMPLIED WARRANTIES OR CONDITIONS OF MERCHANTABILITY, SATISFACTORY QUALITY, AND FITNESS FOR A PARTICULAR PURPOSE.

TO THE EXTENT ALLOWED BY LOCAL LAW, IN NO EVENT WILL HP OR ITS SUPPLIERS BE LIABLE FOR DIRECT, SPECIAL, INCIDENTAL, CONSEQUENTIAL (INCLUDING LOST PROFIT OR DATA), OR OTHER DAMAGE, WHETHER BASED IN CONTRACT, TORT, OR OTHERWISE.

THE WARRANTY TERMS CONTAINED IN THIS STATEMENT, EXCEPT TO THE EXTENT LAWFULLY PERMITTED, DO NOT EXCLUDE, RESTRICT OR MODIFY AND ARE IN ADDITION TO THE MANDATORY STATUTORY RIGHTS APPLICABLE TO THE SALE OF THE PRODUCT TO YOU.

Dynamic Security Enabled Printers

This printer is intended to work only with cartridges that have a new or reused HP chip. A reused HP chip enables the use of reused, remanufactured, and refilled cartridges.

The printer uses dynamic security measures to block cartridges using a non-HP chip. Periodic firmware updates delivered over the internet will maintain the effectiveness of the dynamic security measures and block cartridges that previously worked.

Updates can improve, enhance, or extend the printer's functionality and features, protect against security threats, and serve other purposes, but these updates can also block cartridges using a non-HP chip from working in the printer, including cartridges that work today. Unless you are enrolled in certain HP programs such as Instant Ink or use other services that require automatic online firmware updates, most HP printers can be configured to receive updates either automatically or with a notification that allows you to choose whether to update or not. For more information on dynamic security and how to configure online firmware updates, please go to www.hp.com/learn/ds.

HP policy on non-HP supplies

HP cannot recommend the use of non-HP toner cartridges, either new or remanufactured.

NOTE: For HP printer products, the use of a non-HP toner cartridge or a refilled toner cartridge does not affect either the warranty to the customer or any HP support contract with the customer. However, if product failure or damage is attributable to the use of a non-HP toner cartridge or refilled toner cartridge, HP will charge its standard time and materials charges to service the product for the particular failure or damage.

HP anticounterfeit Web site

Go to www.hp.com/go/anticounterfeit when you install an HP cartridge and the control-panel message indicates the cartridge is non-HP. HP will help determine if the cartridge is genuine and take steps to resolve the problem.

Your cartridge might not be a genuine HP cartridge if you notice the following:

- The supplies status page indicates that a non-HP supply is installed.
- You are experiencing a high number of problems with the cartridge.
- The cartridge does not look like it usually does (for example, the packaging differs from HP packaging).

Data stored on the toner cartridge

The HP toner cartridges used with this product contain a memory chip that assists in the operation of the product.

In addition, this memory chip collects a limited set of information about the usage of the product, which might include the following: the date when the toner cartridge was first installed, the date when the toner cartridge was last used, the number of pages printed using the toner cartridge, the page coverage, the printing modes used, any printing errors that might have occurred, and the product model. This information helps HP design future products to meet our customers' printing needs.

The data collected from the toner cartridge memory chip does not contain information that can be used to identify a customer or user of the toner cartridge or their product.

HP collects a sampling of the memory chips from toner cartridges returned to HP's free return and recycling program (HP Planet Partners: www.hp.com/hprecycle). The memory chips from this sampling are read and studied in order to improve future HP products. HP partners who assist in recycling this toner cartridge might have access to this data, as well.

Any third party possessing the toner cartridge might have access to the anonymous information on the memory chip.

End User License Agreement

READ CAREFULLY BEFORE USING THIS SOFTWARE EQUIPMENT: This End-User License Agreement ("EULA") is a legal agreement between (a) you (either an individual or a single entity) and (b) HP Inc. ("HP") that governs your use of the Sign-In Once application installed on or made available by HP for use with your printing device (the “Software”).

An amendment or addendum to this EULA may accompany the HP Product.

RIGHTS IN THE SOFTWARE ARE OFFERED ONLY ON THE CONDITION THAT YOU AGREE TO ALL TERMS AND CONDITIONS OF THIS EULA. BY INSTALLING, COPYING, DOWNLOADING, OR OTHERWISE USING THE SOFTWARE, YOU AGREE TO BE BOUND BY THE TERMS OF THIS EULA. IF YOU DO NOT ACCEPT THESE LICENSE TERMS, YOUR SOLE REMEDY IS TO IMMEDIATELY STOP USING SOFTWARE AND TO UNINSTALL THE PRODUCT FROM YOUR DEVICE.

THIS EULA IS A GLOBAL AGREEMENT AND IS NOT SPECIFIC TO ANY PARTICULAR COUNTRY, STATE OR TERRITORY. IF YOU ACQUIRED THE SOFTWARE AS A CONSUMER WITHIN THE MEANING OF RELEVANT CONSUMER LEGISLATION IN YOUR COUNTRY, STATE OR TERRITORY, THEN DESPITE ANYTHING TO THE CONTRARY IN THIS EULA, NOTHING IN THIS EULA AFFECTS ANY NON EXCLUDABLE STATUTORY RIGHTS OR REMEDIES THAT YOU MAY HAVE UNDER SUCH CONSUMER LEGISLATION AND THIS EULA IS SUBJECT TO THOSE RIGHTS AND REMEDIES. REFER TO SECTION 17 FOR FURTHER INFORMATION ON YOUR CONSUMER RIGHTS.

1. **GRANT OF LICENSE**. HP grants you the following rights provided you comply with all terms and conditions of this EULA. In the case you are representing an entity or organization, the same terms and conditions in this Section 1 shall also apply with respect to the use, copying, and storage of the Software on the devices of your respective entity or organization.

    a. Use. You may use one copy of the Software on your device for the purpose of accessing and using the Software. You may not separate component parts of the Software for use on more than one device. You do not have the right to distribute the Software, nor do you have the right to modify the Software or disable any licensing or control feature of the Software. You may load the Software into the temporary memory (RAM)of your device for purposes of using the Software.

    b. Storage. You may copy the Software into the local memory or storage device of your device.

    c. Copying. You may make archival or back-up copies of the Software, provided the copy contains all of the original Software's proprietary notices and that it is used only for back-up purposes.

    d. Reservation of Rights. HP and its suppliers reserve all rights not expressly granted to you in this EULA.

    e. Freeware. Notwithstanding the terms and conditions of this EULA, all or any portion of the Software which constitutes non-proprietary HP software or software provided under public license by third parties ("Freeware"), is licensed to you subject to the terms and conditions of the software license agreement or other documentation accompanying such Freeware at the time of download, installation, or use of the Freeware. Use of the Freeware by you shall be governed entirely by the terms and conditions of such license.

2. **UPGRADES**. To use Software identified as an upgrade, you must first be licensed for the original Software identified by HP as eligible for the upgrade. After upgrading, you may no longer use the original Software Product that formed the basis for your upgrade eligibility.

3. **ADDITIONAL SOFTWARE**. This EULA applies to updates or supplements to the original Software provided by HP unless HP provides other terms along with the update or supplement. In case of a conflict between such terms, the other terms will prevail.

4. **TRANSFER**.

    a. Third Party. The initial user of the Software may make a one-time transfer of the Software to another end user. Any transfer must include all component parts, media, printed materials, this EULA, and if applicable, the Certificate of Authenticity. The transfer may not be an indirect transfer, such as a consignment. Prior to the transfer, the end user receiving the transferred product must agree to all the EULA terms. Upon transfer of the Software, your license is automatically terminated.

    b. Restrictions. You may not rent, lease or lend the Software or use the Software for commercial timesharing or bureau use. You may not sublicense, assign or transfer the license or Software except as expressly provided in this EULA.

5. **PROPRIETARY RIGHTS**. All intellectual property rights in the Software and user documentation are owned by HP or its suppliers and are protected by law, including but not limited to United States copyright, trade secret, and trademark law, as well as other applicable laws and international treaty provisions. You shall not remove any product identification, copyright notices or proprietary restrictions from the Software.

6. **LIMITATION ON REVERSE ENGINEERING**. You may not reverse engineer, decompile, or disassemble the Software, except and only to the extent that the right to do so is mandated under applicable law notwithstanding this limitation or it is expressly provided for in this EULA.

7. **TERM**. This EULA is effective unless terminated or rejected. This EULA will also terminate upon conditions set forth elsewhere in this EULA or if you fail to comply with any term or condition of this EULA.

8. **ACCOUNT SET-UP**.

   a. You must register and establish an account on HP ID in order to use the Software. It is your responsibility to obtain and maintain all equipment, services and software needed for access to and use of the HP ID account, any applications linked via this Software, and your device(s), as well as paying any applicable charges.

   b. YOU ARE SOLELY AND FULLY RESPONSIBLE FOR MAINTAINING THE CONFIDENTIALITY OF ANY USERNAMES AND PASSWORDS COLLECTED BY THE SOFTWARE. You must notify HP immediately of any unauthorized use of your HP ID account or any other breach of security related to this Software or the device(s) it is installed on.

9. **NOTICE OF DATA COLLECTION.** HP may collect usernames, passwords, device IP addresses, and/or other authentication information used by you to access HP ID and the various applications connected via this Software. HP may use this data to optimize Software performance based on user preferences, provide support and maintenance, and assure security and software integrity. You can read more about the data collection in the sections titled "What Data We Collect" and "How We Use Data" in the HP Privacy Statement.

10. **DISCLAIMER OF WARRANTIES**. TO THE MAXIMUM EXTENT PERMITTED BY APPLICABLE LAW, HP AND ITS SUPPLIERS PROVIDE THE SOFTWARE "AS IS" AND WITH ALL FAULTS, AND HEREBY DISCLAIM ALL OTHER WARRANTIES, DUTIES, AND CONDITIONS, EITHER EXPRESS, IMPLIED, OR STATUTORY, INCLUDING, BUT NOT LIMITED TO, WARRANTIES: (i) OF TITLE AND NON-INFRINGEMENT; (ii) OF MERCHANTABILITY; (iii) OF FITNESS FOR A PARTICULAR PURPOSE; (iv) THAT THE SOFTWARE WILL FUNCTION WITH NON-HP SUPPLIES OR ACCESSORIES; AND (v), OF LACK OF VIRUSES ALL WITH REGARD TO THE SOFTWARE. Some states/jurisdictions do not allow exclusion of implied warranties or limitations on the duration of implied warranties, so the above disclaimer may not apply to you in its entirety.

11. **LIMITATION OF LIABILITY**. Subject to local law, notwithstanding any damages that you might incur, the entire liability of HP and any of its suppliers under any provision of this EULA and your exclusive remedy for all of the foregoing shall be limited to the greater of the amount actually paid by you separately for the Software or U.S. $5.00. TO THE MAXIMUM EXTENT PERMITTED BY APPLICABLE LAW, IN NO EVENT SHALL HP OR ITS SUPPLIERS BE LIABLE FOR ANY SPECIAL, INCIDENTAL, INDIRECT, OR CONSEQUENTIAL DAMAGES WHATSOEVER (INCLUDING, BUT NOT LIMITED TO, DAMAGES FOR LOSS OF PROFITS OR CONFIDENTIAL OR OTHER INFORMATION, FOR BUSINESS INTERRUPTION, FOR PERSONAL INJURY, OR FOR LOSS OF PRIVACY) ARISING OUT OF OR IN ANY WAY RELATED TO THE USE OF OR INABILITY TO USE THE SOFTWARE, OR OTHERWISE IN CONNECTION WITH ANY PROVISION OF THIS EULA, EVEN IF HP OR ANY SUPPLIER HAS BEEN ADVISED OF THE POSSIBILITY OF SUCH DAMAGES AND EVEN IF THE REMEDY FAILS OF ITS ESSENTIAL PURPOSE. Some states/jurisdictions do not allow the exclusion or limitation of incidental or consequential damages, so the above limitation or exclusion may not apply to you.

12. **U.S. GOVERNMENT CUSTOMERS**. Consistent with FAR 12.211 and 12.212, Commercial Computer Software, Computer Software Documentation, and Technical Data for Commercial Items are licensed to the U.S. Government under HP's standard commercial license.

13. **COMPLIANCE WITH EXPORT LAWS**. You shall comply with all laws and regulations of the United States and other countries ("Export Laws") to assure that the Software is not (1) exported, directly or indirectly, in violation of Export Laws, or (2) used for any purpose prohibited by Export Laws, including, without limitation, nuclear, chemical, or biological weapons proliferation.

14. **CAPACITY AND AUTHORITY TO CONTRACT**. You represent that you are of the legal age of majority in your state of residence and, if applicable, you are duly authorized by your employer to enter into this contract.

15. **APPLICABLE LAW**. This EULA is governed by the laws of the State of California, U.S.A.

16. **ENTIRE AGREEMENT**. Unless you have entered into a separate license agreement for the Software, this EULA (including any addendum or amendment to this EULA which is included with the HP Product) is the entire agreement between you and HP relating to the Software and it supersedes all prior or contemporaneous oral or written communications, proposals and representations with respect to the Software or any other subject matter covered by this EULA. To the extent the terms of any HP policies or programs for support services conflict with the terms of this EULA, the terms of this EULA shall control.

17. **CONSUMER RIGHTS**. Consumers in some countries, states or territories may have the benefit of certain statutory rights and remedies under consumer legislation in respect of which HP's liability cannot lawfully be excluded or limited. If you acquired the Software as a consumer within the meaning of relevant consumer legislation in your country, state or territory, the provisions of this EULA (including the disclaimers of warranties, limitations and exclusions of liability) must be read subject to applicable law and apply only to the maximum extent permitted by that applicable law.

    Australian Consumers: If you acquired the Software as a consumer within the meaning of the 'Australian Consumer Law' under the Australian Competition and Consumer Act 2010 (Cth) then despite any other provision of this EULA:

    a. the Software comes with guarantees that cannot be excluded under the Australian Consumer Law, including that goods will be of acceptable quality and services will be supplied with due care and skill. You are entitled to a replacement or refund for a major failure and compensation for any other reasonably foreseeable loss or damage. You are also entitled to have the Software repaired or replaced if it is not of acceptable quality and the failure does not amount to a major failure

    b. nothing in this EULA excludes, restricts or modifies any right or remedy, or any guarantee, warranty or other term or condition implied or imposed by the Australian Consumer Law which cannot be lawfully excluded or limited; and

    c. the benefits provided to you by the express warranties in this EULA are in addition to other rights and remedies available to you under the Australian Consumer Law. Your rights under the Australian Consumer Law prevail to the extent that they are inconsistent with any limitations contained in the express warranty.

    The Software may be capable of retaining user-generated data. HP hereby provides you with notice that if HP repairs your Software, that repair may result in the loss of that data. To the full extent permitted by law, the limitations and exclusions of HP's liability in this EULA apply in respect of any such loss of data.

    If you think that you are entitled to any warranty under this agreement or any of the above remedies, please contact HP:

Table A-1

	HP PPS Australia Pty Ltd
	Building F, 1 Homebush Bay Drive
	Rhodes, NSW 2138
	Australia

To initiate a support request or warranty claim, please call 13 10 47 (within Australia) or +61 2 8278 1039 (if dialing internationally) or visit www.hp.com.au and select the “Support” tab for the most current customer service options.

If you are a consumer within the meaning of the Australia Consumer Law and you are purchasing the Software or warranty and support services for the Software which are not of a kind ordinarily acquired for personal, domestic or household use or consumption, then despite any other provision of this EULA, HP limits its liability for failure to comply with a consumer guarantee as follows:

a. provision of warranty or support services for the Software: to any one or more of the following: re-supply of the services or payment of the costs of having the services re-supplied;

b. provision of the Software: to any one or more of the following: replacement of the Software or the supply of equivalent software; repair of the Software; payment of the costs of replacing the Software or of acquiring equivalent software; or payment of the costs of having the Software repaired; and

c. otherwise, to the maximum extent permitted by law.

New Zealand Consumers: In New Zealand, the Software comes with guarantees that cannot be excluded under the Consumer Guarantees Act 1993. In New Zealand, Consumer Transaction means a transaction involving a person who is purchasing goods for personal, domestic or household use or consumption and not for the purpose of a business. New Zealand consumers who are purchasing goods for personal, domestic or household use or consumption and not for the purpose of a business ("New Zealand Consumers") are entitled to repair, replacement or refund for a failure and compensation for other reasonably foreseeable loss or damage. A New Zealand Consumer (as defined above) may recover the costs of returning the product to the place of purchase if there is a breach of the New Zealand consumer law; furthermore, if it will be of significant cost to the New Zealand Consumer to return the goods to HP then HP will collect such goods at its own cost. Where any supply of products or services is for business purposes, you agree that the Consumer Guarantees Act 1993 does not apply and that given the nature and value of the transaction, this is fair and reasonable.

© Copyright 2019 HP Development Company, L.P.

The information contained herein is subject to change without notice. All other product names mentioned herein may be trademarks of their respective companies. To the extent permitted by applicable law, the only warranties for HP products and services are set forth in the express warranty statements accompanying such products and services. Nothing herein should be construed as constituting an additional warranty. To the extent permitted by applicable law, HP shall not be liable for technical or editorial errors or omissions contained herein.

Version: April 2019

Customer self-repair warranty service

HP products are designed with many Customer Self Repair (CSR) parts to minimize repair time and allow for greater flexibility in performing defective parts replacement. If during the diagnosis period, HP identifies that the repair can be accomplished by the use of a CSR part, HP will ship that part directly to you for replacement. There are two categories of CSR parts: 1) Parts for which customer self repair is mandatory. If you request HP to replace these parts, you will be charged for the travel and labor costs of this service. 2) Parts for which customer self repair is optional. These parts are also designed for Customer Self Repair. If, however, you require that HP replace them for you, this may be done at no additional charge under the type of warranty service designated for your product.

Based on availability and where geography permits, CSR parts will be shipped for next business day delivery. Same-day or four-hour delivery may be offered at an additional charge where geography permits. If assistance is required, you can call the HP Technical Support Center and a technician will help you over the phone. HP specifies in the materials shipped with a replacement CSR part whether a defective part must be returned to HP. In cases where it is required to return the defective part to HP, you must ship the defective part back to HP within a defined period of time, normally five (5) business days. The defective part must be returned with the associated documentation in the provided shipping material. Failure to return the defective part may result in HP billing you for the replacement. With a customer self repair, HP will pay all shipping and part return costs and determine the courier/carrier to be used.

Customer support

Get telephone support for your country/region Have the product name, serial number, date of purchase, and problem description ready.	Country/region phone numbers are on the flyer that was in the box with your product or at www.hp.com/support/.
Get 24-hour Internet support, and download software utilities and drivers	www.hp.com/support/ljmfp4101-4104
Order additional HP service or maintenance agreements	www.hp.com/go/carepack
Register your product	www.register.hp.com

B Environmental product stewardship program

Protecting the environment

HP is committed to providing quality products in an environmentally sound manner. This product has been designed with several attributes to minimize impacts on our environment.

Ozone production

The airborne emissions of ozone for this product has been measured according to a standardized protocol* and when these emissions data are applied to an anticipated high-use scenario in an office workspace**, HP has determined there is no appreciable amount of ozone generated during printing and the levels are well within current indoor air quality standards and guidelines.

* Test method for the determination of emissions from hardcopy devices with respect to awarding the environmental label for office devices with printing function; DE-UZ 205 – BAM January, 2018

** Based on ozone concentration when printing 2 hours per day in 30.6 cubic meter room with a ventilation rate of 0.68 air changes per hour with HP printing supplies

Power consumption

Power usage drops significantly while in Ready, Sleep, or Off mode, which saves natural resources and saves money without affecting the high performance of this product. HP printing and imaging equipment marked with the ENERGY STAR® logo is qualified to the U.S. Environmental Protection Agency's ENERGY STAR specifications for imaging equipment. The following mark will appear on ENERGY STAR qualified imaging products:

Additional ENERGY STAR qualified imaging product model information is listed at:

www.hp.com/go/energystar

Toner consumption

EconoMode uses less toner, which might extend the life of the print cartridge. HP does not recommend the full-time use of EconoMode. If EconoMode is used full-time, the toner supply might outlast the mechanical parts in the print cartridge. If print quality begins to degrade and is no longer acceptable, consider replacing the print cartridge.

Paper use

This product's duplex feature (manual or automatic) and N-up printing (multiple pages printed on one page) capability can reduce paper usage and the resulting demands on natural resources.

Plastics

Plastic parts over 25 grams are marked according to international standards that enhance the ability to identify plastics for recycling purposes at the end of the product's life.

HP LaserJet print supplies

Original HP Supplies were designed with the environment in mind. HP makes it easy to conserve resources and paper when printing. And when you are done, we make it easy and free to recycle.[1]

All HP cartridges returned to HP Planet Partners go through a multiphase recycling process where materials are separated and refined for use as raw material in new Original HP cartridges and everyday products. No Original HP cartridges returned through HP Planet Partners are ever sent to a landfill, and HP never refills or resells Original HP cartridges.

To participate in the HP Planet Partners return and recycling program, visit www.hp.com/hprecycle. Select your country/region for information on how to return HP printing supplies. Multi-lingual program information and instructions are also included in every new HP LaserJet print cartridge package.

[1] Program availability varies. For more information, visit www.hp.com/hprecycle.

Paper

This product is capable of using recycled paper and lightweight paper (EcoFFICIENT™) when the paper meets the guidelines outlined in the *HP LaserJet Printer Family Print Media Guide*. This product is suitable for the use of recycled paper and lightweight paper (EcoFFICIENT™) according to EN12281:2002.

Material restrictions

This HP product does not contain added mercury.

Battery information

This product may contain a:

- Poly-carbonmonofluoride lithium (BR type) or
- Manganese dioxide lithium (CR type)

battery that may require special handling at end-of-life.

NOTE: NOTE for CR type only: Perchlorate material - special handling may apply. See http://dtsc.ca.gov/hazardouswaste/perchlorate.

Weight: ~3 g

Location: On motherboard

User Removable: No

廢電池請回收

For recycling information, you can contact http://www.hp.com/recycle or contact your local authorities or the Electronics Industries Alliance: http://www.eiae.org.

Disposal of waste equipment by users (EU, UK, and India)

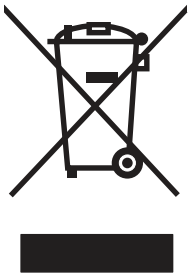

This symbol means do not dispose of your product with your other household waste. Instead, you should protect human health and the environment by handing over your waste equipment to a designated collection point for the recycling of waste electrical and electronic equipment. For more information, please contact your household waste disposal service, or go to: www.hp.com/recycle.

Electronic hardware recycling

HP encourages customers to recycle used electronic hardware. For more information about recycling programs go to: www.hp.com/recycle.

Brazil hardware recycling information

Não descarte o produto eletrônico em lixo comum

Este produto eletrônico e seus componentes não devem ser descartados no lixo comum, pois embora estejam em conformidade com padrões mundiais de restrição a substâncias nocivas, podem conter, ainda que em quantidades mínimas, substâncias impactantes ao meio ambiente. Ao final da vida útil deste produto, o usuário deverá entregá-lo à HP. A não observância dessa orientação sujeitará o infrator às sanções previstas em lei.

Após o uso, as pilhas e/ou baterias dos produtos HP deverão ser entregues ao estabelecimento comercial ou rede de assistência técnica autorizada pela HP.

Para maiores informações, inclusive sobre os pontos de recebimento, acesse:

www.hp.com.br/reciclar

WEEE (Turkey)

Türkiye Cumhuriyeti: AEEE Yönetmeliğine Uygundur

Chemical substances

HP is committed to providing our customers with information about the chemical substances in our products as needed to comply with legal requirements such as REACH (Regulation EC No 1907/2006 of the European Parliament and the Council). A chemical information report for this product can be found at: www.hp.com/go/reach.

Product Power Data per European Union Commission Regulation 1275/2008 and the UK Relevant Statutory Requirements

For product power data, including the power consumption of the product in networked standby if all wired network ports are connected and all wireless network ports are activated, please refer to section P14 'Additional Information' of the product IT ECO Declaration at www.hp.com/hpinfo/globalcitizenship/environment/productdata/itecodesktop-pc.html.

SEPA Ecolabel User Information (China)

中国环境标识认证产品用户说明

噪声大于 63.0 dB(A)的办公设备不宜放置于办公室内，请在独立的隔离区域使用。

如需长时间使用本产品或打印大量文件，请确保在通风良好的房间内使用。

如您需要确认本产品处于零能耗状态，请按下电源关闭按钮，并将插头从电源插座断开。

您可以使用再生纸，以减少资源耗费。

The regulation of the implementation on China energy label for printer, fax, and copier

依据"复印机、打印机和传真机能源效率标识实施规则"，本打印机具有中国能效标签。根据"复印机、打印机和传真机能效限定值及 能效等级" ("GB21521") 决定并计算得出该标签上所示的能效等级和 TEC (典型能耗) 值。

1. 能效等级

能效等级分为三个等级，等级 1 级能效最高。根据产品类型和打印速度标准决定能效限定值。

2. 能效信息

2.1 LaserJet 打印机和高性能喷墨打印机

- 典型能耗

  典型能耗是正常运行 GB21521 测试方法中指定的时间后的耗电量。此数据表示为每周千瓦时 (kWh)。

标签上所示的能效数字按涵盖根据“复印机、打印机和传真机能源效率标识实施规则”选择的登记装置中所有配置的代表性配置测定而 得。因此，本特定产品型号的实际能耗可能与标签上所示的数据不同。

有关规格的详细信息，请参阅 GB21521 标准的当前版本。

Restriction on Hazardous Substances statement (India)

This product, as well as its related consumables and spares, complies with the reduction in hazardous substances provisions of the "India E-waste Rule 2016." It does not contain lead, mercury, hexavalent chromium, polybrominated biphenyls or polybrominated diphenyl ethers in concentrations exceeding 0.1 weight % and 0.01 weight % for cadmium, except where allowed pursuant to the exemptions set in Schedule 2 of the Rule.

Substances Table (China)

产品中有害物质或元素的名称及含量
The Table of Hazardous Substances/Elements and their Content
根据中国《电器电子产品有害物质限制使用管理办法》
As required by China's Management Methods for Restricted Use of Hazardous Substances in Electrical and Electronic Products

部件名称 Part Name	有害物质 Hazardous Substances					
	铅 Lead (Pb)	汞 Mercury (Hg)	镉 Cadmium (Cd)	六价铬 Hexavalent Chromium (Cr(VI))	多溴联苯 Polybrominated biphenyls (PBB)	多溴二苯醚 Polybrominated diphenyl ethers (PBDE)
打印引擎	X	O	O	O	O	O
复印机组件	X	O	O	O	O	O
控制面板	X	O	O	O	O	O
塑料外壳	O	O	O	O	O	O
格式化板组件	X	O	O	O	O	O
碳粉盒	X	O	O	O	O	O

表格依据SJ/T 11364 的规定编制。
This form has been prepared in compliance with the provisions of SJ/T 11364.

O：表示该有害物质在该部件所有均质材料中的含量均在GB/T 26572 规定的限量要求以下。
O: Indicates that the content of said hazardous substance in all of the homogenous materials in the component is within the limits required by GB/T 26572.

X：表示该有害物质至少在该部件的某一均质材料中的含量超出GB/T 26572 规定的限量要求。
X: Indicates that the content of said hazardous substance exceeds the limits required by GB/T 26572 in at least one homogenous material in the component.

此表中所有名称中含 "X" 的部件均符合中国 RoHS达标管理目录限用物质应用例外清单的豁免。
All parts named in this table with an "X" are in compliance with the China RoHS "List of Exceptions to RoHS Compliance Management Catalog (or China RoHS Exemptions)".

此表中所有名称中含 "X" 的部件均符合欧盟 RoHS 立法。
All parts named in this table with an "X" are in compliance with the European Union's RoHS Legislation.

注：环保使用期限的参考标识取决于产品正常工作的温度和湿度等条件
Note: The referenced Environmental Protection Use Period Marking was determined according to normal operating use conditions of the product such as temperature and humidity.

Material Safety Data Sheet (MSDS)

Material Safety Data Sheets (MSDS) for supplies containing chemical substances (for example, toner) can be obtained by accessing the HP Web site at www.hp.com/go/msds.

EPEAT

Many HP products are designed to meet EPEAT. EPEAT is a comprehensive environmental rating that helps identify greener electronics equipment. For more information on EPEAT go to www.epeat.net. For information on HP's EPEAT registered products go to www.hp.com/hpinfo/globalcitizenship/environment/pdf/epeat_printers.pdf.

Substances Table (Taiwan)

限用物質含有情況標示聲明書

Declaration of the Presence Condition of the Restricted Substances Marking

若要存取產品的最新使用指南或手冊，請前往 http://www.hp.com/support 。**選取搜尋您的產品**，然後依照畫面上的指示繼續執行。

To access the latest user guides or manuals for your product. Go to http://www.support.hp.com. Select **Find your product**, and then follow the on-screen instructions.

單元 Unit	限用物質及其化學符號 Restricted substances and its chemical symbols					
	鉛 Lead (Pb)	汞 Mercury (Hg)	鎘 Cadmium (Cd)	六價鉻 Hexavalent chromium (Cr^{+6})	多溴聯苯 Polybrominated biphenyls (PBB)	多溴二苯醚 Polybrominated diphenyl ethers (PBDE)
列印引擎 Print engine	—	○	○	○	○	○
列印機組件 Print assembly	—	○	○	○	○	○
控制面板 Control panel	—	○	○	○	○	○
塑膠外殼 Plastic housing parts	○	○	○	○	○	○
格式化組件 Formatter	—	○	○	○	○	○

備考1.〝超出0.1 wt %〞及〝超出0.01 wt %〞係指限用物質之百分比含量超出百分比含量基準值。

Note 1：“Exceeding 0.1 wt %” and “exceeding 0.01 wt %” indicate that the percentage content of the restricted substance exceeds the reference percentage value of presence condition.

備考2.〝○〞係指該項限用物質之百分比含量未超出百分比含量基準值。

Note 2：“○” indicates that the percentage content of the restricted substance does not exceed the percentage of reference value of presence.

備考3.〝—〞係指該項限用物質為排除項目。

Note 3：The “–” indicates that the restricted substance corresponds to the exemption.

For more information

To obtain information about these environmental topics:

- Product environmental profile sheet for this and many related HP products
- HP's commitment to the environment
- HP's environmental management system
- HP's end-of-life product return and recycling program
- Material Safety Data Sheets

Visit www.hp.com/go/environment.

Also, visit www.hp.com/recycle.

C Regulatory information

Regulatory statements

Regulatory model identification numbers

For regulatory identification purposes, your product is assigned a regulatory model number. Regulatory model numbers should not be confused with marketing names or product numbers.

Table C-1 **Regulatory model numbers**

Product model number	Regulatory model number
HP LaserJet Pro MFP 4101dw	SHNGC-1801-01
HP LaserJet Pro MFP 4101fdn	SHNGC-1801-00
HP LaserJet Pro MFP 4101fdw	SHNGC-1801-02
HP LaserJet Pro MFP 4102dw	SHNGC-1801-01
HP LaserJet Pro MFP 4102fdn	SHNGC-1801-00
HP LaserJet Pro MFP 4102fdw	SHNGC-1801-02

European Union & United Kingdom Regulatory Notice

Products bearing the CE marking and UKCA marking comply with one or more of the following EU Directives and/or equivalent UK Statutory Instruments as may be applicable: Low Voltage Directive 2014/35/EU, EMC Directive 2014/30/EU, Eco Design Directive 2009/125/EC, RED 2014/53/EU, RoHS Directive 2011/65/EU.

Compliance with these directives is assessed using applicable European Harmonized Standards. The full EU and UK Declaration of Conformity can be found at the following website: www.hp.com/go/certificates (Search with the product model name or its Regulatory Model Number (RMN), which may be found on the regulatory label.)

The point of contact for regulatory matters is: Email techregshelp@hp.com

The EU point of contact for regulatory matters is:

HP Deutschland GmbH, HP HQ-TRE, 71025 Boeblingen, Germany

The UK point of contact for regulatory matters is:

HP Inc UK Ltd, Regulatory Enquiries, Earley West, 300 Thames Valley Park Drive, Reading, RG6 1PT

FCC regulations

This equipment has been tested and found to comply with the limits for a Class B digital device, pursuant to part 15 of the FCC Rules. These limits are designed to provide reasonable protection against harmful interference in a residential installation. This equipment generates, uses and can radiate radio frequency energy and, if not installed and used in accordance with the instructions, may cause harmful interference to radio communications. However, there is no guarantee that interference will not occur in a particular installation. If this equipment does cause harmful interference to radio or television reception, which can be determined by turning the equipment off and on, the user is encouraged to try to correct the interference by one or more of the following measures:

- Reorient or relocate the receiving antenna.
- Increase the separation between the equipment and receiver.
- Connect the equipment into an outlet on a circuit different from that to which the receiver is connected.
- Consult the dealer or an experienced radio/TV technician for help.

NOTE: Any changes or modifications to the printer that are not expressly approved by HP could void the user's authority to operate this equipment.

Use of a shielded interface cable is required to comply with the Class B limits of Part 15 of FCC rules.

Canada - Industry Canada ICES-003 Compliance Statement

CAN ICES-003(B)/NMB-003(B)

VCCI statement (Japan)

VCCI 32-1 規定適合の場合

この装置は、クラスB機器です。この装置は、住宅環境で使用することを目的としていますが、この装置がラジオやテレビジョン受信機に近接して使用されると、受信障害を引き起こすことがあります。
取扱説明書に従って正しい取り扱いをして下さい。 VCCI ー B

Power cord instructions

Make sure your power source is adequate for the product voltage rating. The voltage rating is on the product label. The product uses either 100-127 Vac or 220-240 Vac and 50/60 Hz.

Connect the power cord between the product and a grounded AC outlet.

CAUTION: To prevent damage to the product, use only the power cord that is provided with the product.

Power cord statement (Japan)

製品には、同梱された電源コードをお使い下さい。
同梱された電源コードは、他の製品では使用出来ません。

Laser safety

The Center for Devices and Radiological Health (CDRH) of the U.S. Food and Drug Administration has implemented regulations for laser products manufactured since August 1, 1976. Compliance is mandatory for products marketed in the United States. The device is certified as a "Class 1" laser product under the U.S. Department of Health and Human Services (DHHS) Radiation Performance Standard according to the Radiation Control for Health and Safety Act of 1968. Since radiation emitted inside the device is completely confined within protective housings and external covers, the laser beam cannot escape during any phase of normal user operation.

⚠ **WARNING!** Using controls, making adjustments, or performing procedures other than those specified in this user guide may result in exposure to hazardous radiation.

For other US/Canada regulatory matters, please contact:

HP Inc.

1501 Page Mill Rd, Palo Alto, CA 94304, USA

Email contact: techregshelp@hp.com or Telephone contact: +1 (650) 857-1501

Laser statement for Finland

Luokan 1 laserlaite

HP LaserJet Pro MFP 4101dw, 4101fdn, 4101fdw, 4102dw, 4102fdn, 4102fdw , laserkirjoitin on käyttäjän kannalta turvallinen luokan 1 laserlaite. Normaalissa käytössä kirjoittimen suojakotelointi estää lasersäteen pääsyn laitteen ulkopuolelle. Laitteen turvallisuusluokka on määritetty standardin EN 60825-1 (2014) mukaisesti.

VAROITUS !

Laitteen käyttäminen muulla kuin käyttöohjeessa mainitulla tavalla saattaa altistaa käyttäjän turvallisuusluokan 1 ylittävälle näkymättömälle lasersäteilylle.

VARNING !

Om apparaten används på annat sätt än i bruksanvisning specificerats, kan användaren utsättas för osynlig laserstrålning, som överskrider gränsen för laserklass 1.

HUOLTO

HP LaserJet Pro MFP 4101dw, 4101fdn, 4101fdw, 4102dw, 4102fdn, 4102fdw - kirjoittimen sisällä ei ole käyttäjän huollettavissa olevia kohteita. Laitteen saa avata ja huoltaa ainoastaan sen huoltamiseen koulutettu henkilö. Tällaiseksi huoltotoimenpiteeksi ei katsota väriainekasetin vaihtamista, paperiradan puhdistusta tai muita käyttäjän käsikirjassa lueteltuja, käyttäjän tehtäväksi tarkoitettuja ylläpitotoimia, jotka voidaan suorittaa ilman erikoistyökaluja.

VARO !

Mikäli kirjoittimen suojakotelo avataan, olet alttiina näkymättömällelasersäteilylle laitteen ollessa toiminnassa. Älä katso säteeseen.

VARNING !

Om laserprinterns skyddshölje öppnas då apparaten är i funktion, utsättas användaren för osynlig laserstrålning. Betrakta ej strålen.

Tiedot laitteessa käytettävän laserdiodin säteilyominaisuuksista: Aallonpituus 775-795 nm Teho 5 m W Luokan 3B laser.

Nordic Statements (Denmark, Finland, Norway, Sweden)

Denmark:

Apparatets stikprop skal tilsuttes en stikkontakt med jord, som giver forbindelse til stikproppens jord.

Finland:

Laite on liitettävä suojakoskettimilla varustettuun pistorasiaan.

Norway:

Apparatet må tilkoples jordet stikkontakt.

Sweden:

Apparaten skall anslutas till jordat uttag.

GS statement (Germany)

Das Gerät ist nicht für die Benutzung im unmittelbaren Gesichtsfeld am Bildschirmarbeitsplatz vorgesehen. Um störende Reflexionen am Bildschirmarbeitsplatz zu vermeiden, darf dieses Produkt nicht im unmittelbaren Gesichtsfeld platziert werden.

Das Gerät ist kein Bildschirmarbeitsplatz gemäß BildscharbV. Bei ungünstigen Lichtverhältnissen (z. B. direkte Sonneneinstrahlung) kann es zu Reflexionen auf dem Display und damit zu Einschränkungen der Lesbarkeit der dargestellten Zeichen kommen.

Die Bilddarstellung dieses Gerätes ist nicht für verlängerte Bildschirmtätigkeiten geeignet.

Eurasian Conformity (Armenia, Belarus, Kazakhstan, Kyrgyzstan, Russia)

Өндіруші және өндіру мерзімі

HP Inc. Мекенжайы: 1501 Page Mill Road, Palo Alto, California 94304, U.S.

Өнімнің жасалу мерзімін табу үшін өнімнің қызмет көрсету жапсырмасындағы 10 таңбадан тұратын сериялық нөмірін қараңыз.

4-ші, 5-ші және 6-шы сандар өнімнің жасалған жылы мен аптасын көрсетеді. 4-ші сан жылын көрсетеді, мысалы «3» саны «2013» дегенді білдіреді.

5-ші және 6-шы сандары берілген жылдың қай аптасында жасалғанын көрсетеді, мысалы, «12» саны «12-ші» апта дегенді білдіреді.

Жергілікті өкілдіктері:

Ресей: ООО "ЭйчПи Инк",
Ресей Федерациясы, 125171, Мәскеу, Ленинград шоссесі, 16А блок 3,
Телефон/факс: +7 495 797 35 00 / +7 499 92132 50

Қазақстан: "ЭйчПи Глобал Трэйдинг Би.Ви." компаниясының Қазақстандағы филиалы, Қазақстан Республикасы, 050040, Алматы к., Бостандык ауданы, Әл-Фараби даңғылы, 77/7,
Телефон/факс: +7 727 355 35 52

Производитель и дата производства

HP Inc. Адрес: 1501 Page Mill Road, Palo Alto, California 94304, U.S.

Дата производства зашифрована в 10-значном серийном номере, расположенном на наклейке со служебной информацией изделия.

4-я, 5-я и 6-я цифры обозначают год и неделю производства. 4-я цифра обозначает год, например, «3» обозначает, что изделие произведено в «2013» году.
5-я и 6-я цифры обозначают номер недели в году производства, например, «12» обозначает «12-ю» неделю.

Местные представители:

Россия: ООО "ЭйчПи Инк",
Российская Федерация, 125171, г. Москва, Ленинградское шоссе, 16А, стр.3,
Телефон/факс: +7 495 797 35 00 / +7 499 92132 50

Казахстан: Филиал компании "ЭйчПи Глобал Трэйдинг Би.Ви.", Республика Казахстан, 050040, г. Алматы, Бостандыкский район, проспект Аль-Фараби, 77/7, Телефон/факс: + 7 727 355 35 52

Taiwan BSMI USB Port (Walk-up) statement

台灣 BSMI USB 埠 (Walk-up) 聲明

產品前端, 上方或側邊之 USB 埠 (walk-up 埠), 僅支持隨身碟.

Product stability

Do not extend more than one paper tray at a time.

Do not use paper tray as a step.

All trays must be closed while relocating/moving product.

Keep hands out of paper tray when closing.

If the printer has a keyboard, close keyboard tray when not in use.

Telecom (fax) statements

Fax Cord Statement

Product may or may not have fax/telephone cord enclosed. If not provided to reduce the risk of fire, use only No. 26 AWG or larger telecommunication line cord.

Europe Statement for Telecom Operation

The printer meets applicable EU Directive & UK Statutory Instruments and carries the CE & UKCA mark accordingly. For details see EU & UK Declaration of Conformity issued by the manufacturer.

For printers with the feature to be connected to the analog Public Switched Telecommunication Networks (PSTN):

Due to differences between individual European national PSTNs the product may not guarantee unconditional assurance of successful operation on every PSTN termination point. Network compatibility depends on the correct setting being selected by the customer in preparation of its connection to the PSTN. Please follow the instructions provided in the user manual. If you experience network compatibility issues, please contact your equipment supplier or HP Inc. help desk in the country of operation. Connecting to a PSTN termination point may be the subject of additional requirements set out by the local PSTN operator.

New Zealand Telecom Statements

The grant of a Telepermit for any item of terminal equipment indicates only that Telecom has accepted that the item complies with minimum conditions for connection to its network. It indicates no endorsement of the product by Telecom, nor does it provide any sort of warranty. Above all, it provides no assurance that any item will work correctly in all respects with another item of Telepermitted equipment of a different make or model, nor does it imply that any product is compatible with all of Telecom's network services.

This equipment may not provide for the effective hand-over of a call to another device connected to the same line.

This equipment shall not be set up to make automatic calls to the Telecom "111" Emergency Service.

This product has not been tested to ensure compatibility with the FaxAbility distinctive ring service for New Zealand.

Additional FCC statement for telecom products (US)

This equipment complies with Part 68 of the FCC rules and the requirements adopted by the ACTA. On the back of this equipment is a label that contains, among other information, a product identifier in the format US:AAAEQ##TXXXX. If requested, this number must be provided to the telephone company.

The REN is used to determine the quantity of devices, which may be connected to the telephone line. Excessive RENs on the telephone line may result in the devices not ringing in response to an incoming

call. In most, but not all, areas, the sum of the RENs should not exceed five (5.0). To be certain of the number of devices that may be connected to the line, as determined by the total RENs, contact the telephone company to determine the maximum REN for the calling area.

This equipment uses the following USOC jacks: RJ11C.

FCC-compliant telephone cord, jack and modular plug should be used with this equipment. This equipment is designed to be connected to the telephone network or premises wiring using a compatible modular jack, which is Part 68 compliant. This equipment cannot be used on telephone company-provided coin service. Connection to Party Line Service is subject to state tariffs.

If this equipment causes harm to the telephone network, the telephone company will notify you in advance that temporary discontinuance of service may be required. If advance notice is not practical, the telephone company will notify the customer as soon as possible. Also, you will be advised of your right to file a complaint with the FCC if you believe it is necessary.

The telephone company may make changes in its facilities, equipment, operations, or procedures that could affect the operation of the equipment. If this happens, the telephone company will provide advance notice in order for you to make the necessary modifications in order to maintain uninterrupted service.

If trouble is experienced with this equipment, please see the numbers in this manual for repair and (or) warranty information. If the trouble is causing harm to the telephone network, the telephone company may request you remove the equipment from the network until the problem is resolved.

The customer can do the following repairs: Replace any original equipment that came with the device. This includes the toner cartridge, the supports for trays and bins, the power cord, and the telephone cord. It is recommended that the customer install an AC surge arrestor in the AC outlet to which this device is connected. This is to avoid damage to the equipment caused by local lightning strikes and other electrical surges.

Telephone Consumer Protection Act (US)

The Telephone Consumer Protection Act of 1991 makes it unlawful for any person to use a computer or other electronic device, including fax machines, to send any message unless such message clearly contains, in a margin at the top or bottom of each transmitted page or on the first page of the transmission, the date and time it is sent and an identification of the business, other entity, or individual sending the message and the telephone number of the sending machine or such business, or other entity, or individual. (The telephone number provided cannot be a 900 number or any other number for which charges exceed local or long distance transmission charges).

Industry Canada CS-03 requirements

Notice: The Industry Canada label identifies certified equipment. This certification means the equipment meets certain telecommunications network protective, operational, and safety requirements as prescribed in the appropriate Terminal Equipment Technical Requirement document(s). The Department does not guarantee the equipment will operate to the user's satisfaction. Before installing this equipment, users should ensure that it is permissible for the equipment to be connected to the facilities of the local telecommunications company. The equipment must also be installed using an acceptable method of connection. The customer should be aware that compliance with the above conditions may not prevent degradation of service in some situations. Repairs to certified equipment should be coordinated by a representative designated by the supplier. Any repairs or alterations made by the user to this equipment, or equipment malfunctions, may give the telecommunications company cause to request the user to disconnect the equipment. Users should ensure for their own protection that

the electrical ground connections of the power utility, telephone lines, and internal metallic water pipe system, if present, are connected together. This precaution can be particularly important in rural areas.

⚠ CAUTION: Users should not attempt to make such connections themselves, but should contact the appropriate electric inspection authority, or electrician, as appropriate. The Ringer Equivalence Number (REN) of this device is shown on the regulatory chassis label.

This product meets the applicable Innovation, Science and Economic Development Canada technical specifications.

The Ringer Equivalence Number (REN) indicates the maximum number of devices allowed to be connected to a telephone interface. The termination of an interface may consist of any combination of devices subject only to the requirement that the sum of the RENs of all the devices not exceed five (5).

The standard connecting arrangement code (telephone jack type) for equipment with direct connections to the telephone network is CA11A.

Remarque: L'étiquette Industrie Canaca identifie un équiement certifié. Cette certification signifie que l'équipement satisfait à certaines exigences en matière de protection, d'exploitation et de sécurité du réseau de télécommunications, conformément au(x) document(s) sur les exigences techniques relatives à l'équipement terminal. Le Ministère ne garantit pas que l'équipement donnera satisfaction à l'utilisateur. Avant d'installer cet équipement, les utilisateurs doivent s'assurer qu'ils sont autorisés à connecter l'équipement aux installations de l'entreprise locale de télécommunications. L'équipement doit également être installé via une méthode de connexion appropriée. Le client doit être conscient que le respect des conditions ci-dessus ne peut pas empêcher la dégradation du service dans certaines situations. Les réparations de l'équipement certifié doivent être coordonnées par un représentant désigné par le fournisseur. Toute réparation ou modification apportée par l'utilisateur à cet équipement ou tout dysfonctionnement de l'équipement peut amener l'entreprise de télécommunications à demander à l'utilisateur de débrancher l'équipement. Pour leur propre protection, les utilisateurs doivent s'assurer que les connexions électriques à la terre du service public d'électricité, des lignes téléphoniques et, le cas échéant, des conduites d'eau métalliques internes sont raccordées ensemble. Cette précaution peut être particulièrement importante dans les zones rurales.

⚠ CAUTION: Les utilisateurs ne doivent pas tenter d'effectuer eux-mêmes de tels raccordements, mais doivent prendre contact avec les services d'inspection électrique appropriés ou avec un électricien, selon le cas. Le numéro d'équivalence de sonnerie (REN) de cet appareil est indiqué sur l'étiquette réglementaire du châssis.

Ce produit est conforme aux spécifications techniques applicables d'Innovation, Sciences et Développement économique Canada.

Le numéro d'équivalence de sonnerie (REN) indique le nombre maximum d'appareils pouvant être connectés à une interface téléphonique. La terminaison d'une interface peut consister en n'importe quelle combinaison de dispositifs, à la seule condition que la somme des REN de tous les dispositifs ne dépasse pas cinq (5).

Le code de raccordement standard (type prise téléphonique) pour les appareils directement raccordés au réseau téléphonique est CA11A.

Japan Telecom Mark

この製品には、認定済みファックス モジュールが含まれています。

Ⓣ XXX-XXXXXXXX

認証番号 (XXX XXXXXXXX) は、HP アナログ ファックス アクセサリにあります。

Belarus

В соответствии с Постановлением Совета Министров Республики Беларусь от 24 мая 2017 года № 383 (об описании и порядке применения знака соответствия к техническому регламенту Республики Беларусь) продукция, требующая подтверждения соответствия техническому регламенту Республики Беларусь, размещенная на рынке Республики Беларусь, должна быть маркирована знаком соответствия ТР BY.

Wireless statements

European regulatory notice

Wireless functionality in Europe

For products with 802.11b/g/n or Bluetooth radio	This product operates on radio frequency between 2400 MHz and 2483.5 MHz, with a transmit power of 20 dBm (100 mW) or less.
For products with 802.11a/b/g/n radio	**CAUTION:** IEEE802.11x wireless LAN with 5.15-5.35 GHz frequency band is restricted for **indoor use only** in all European Union member states, EFTA (Iceland, Norway, Liechtenstein) and most other European countries (i.e.: Switzerland, Turkey, Republic of Serbia). Using this WLAN application outdoors might lead to interference issues with existing radio services. This product operates on radio frequencies between 2400 MHz and 2483.5 MHz, and between 5170 MHz and 5710 MHz, with a transmit power of 20 dBm (100 mW) or less.

FCC compliance statement—United States

Exposure to radio frequency radiation

⚠ CAUTION: The radiated output power of this device is far below the FCC radio frequency exposure limits. Nevertheless, the device shall be used in such a manner that the potential for human contact during normal operation is minimized.

In order to avoid the possibility of exceeding the FCC radio frequency exposure limits, human proximity to the antenna shall not be less than 20 cm (8 in) during normal operation.

This device complies with Part 15 of FCC Rules. Operation is subject to the following two conditions: (1) this device may not cause interference, and (2) this device must accept any interference, including interference that may cause undesired operation of the device.

⚠ CAUTION: Based on Section 15.21 of the FCC rules, changes of modifications to the operation of this product without the express approval by HP may invalidate its authorized use.

Australia statement

This device incorporates a radio-transmitting (wireless) device. For protection against radio transmission exposure, it is recommended that this device be operated no less than 20 cm from the head, neck, or body.

Brazil: (Portuguese)

Este equipamento não tem direito à proteção contra interferência prejudicial e não pode causar interferência em sistemas devidamente autorizados.

Para maiores informações consulte o site da ANATEL – www.anatel.gov.br

Canadian statements

For Indoor Use. This digital apparatus does not exceed the Class B limits for radio noise emissions from digital apparatus as set out in the radio interference regulations of the Canadian Department of Communications. The internal wireless radio complies with RSS 210 of Industry Canada.

Pour l´usage d´intérieur. Le présent appareil numérique n´émet pas de bruits radioélectriques dépassant les limites applicables aux appareils numériques de Classe B prescribes dans le règlement sur le brouillage radioélectrique édicté par le Ministère des Communications du Canada. Le composant RF interne est conforme à la norme CNR-210 d´Industrie Canada.

Products with 5 GHz Operation Industry of Canada

⚠ CAUTION: When using IEEE 802.11a wireless LAN, this product is restricted to indoor use, due to its operation in the 5.15- to 5.25-GHz frequency range. Industry Canada requires this product to be used indoors for the frequency range of 5.15 GHz to 5.25 GHz to reduce the potential for harmful interference to co-channel mobile satellite systems. High-power radar is allocated as the primary user of the 5.25- to 5.35-GHz and 5.65- to 5.85-GHz bands. These radar stations can cause interference with and/or damage to this device.

Lors de l'utilisation d'un réseau local sans fil IEEE 802.11a, ce produit est réservé à une utilisation en intérieur en raison de sa plage de fréquences, comprise entre 5,15 et 5,25 GHz. Industrie Canada recommande l'utilisation en intérieur de ce produit pour la plage de fréquences comprise entre 5,15 et 5,25 GHz afin de réduire les interférences nuisibles potentielles avec les systèmes de satellite portables utilisant le même canal. Le radar à haute puissance est défini comme étant le principal utilisateur des bandes 5,25 à 5,35 GHz et 5,65 à 5,85 GHz. Ces stations radar peuvent provoquer des interférences sur ce périphérique et/ou l'endommager.

Exposure to Radio Frequency Radiation (Canada)

⚠ WARNING! Exposure to Radio Frequency Radiation The radiated output power of this device is below the Industry Canada radio frequency exposure limits. Nevertheless, the device should be used in such a manner that the potential for human contact is minimized during normal operation.

To avoid the possibility of exceeding the Industry Canada radio frequency exposure limits, human proximity to the antennas should not be less than 20 cm (8 inches).

AVERTISSEMENT! Exposition aux émissions de fréquences radio. La puissance de sortie émise par ce périphérique est inférieure aux limites fixées par Industrie Canada en matière d'exposition aux fréquences radio. Néanmoins, les précautions d'utilisation du périphérique doivent être respectées afin de limiter tout risque de contact avec une personne.

European Regulatory Notice

The telecommunications functionality of this product may be used in the following European countries/regions:

Austria, Belgium, Bulgaria, Cyprus, Czech Republic, Denmark, Estonia, Finland, France, Germany, Greece, Hungary, Iceland, Ireland, Italy, Latvia, Liechtenstein, Lithuania, Luxembourg, Malta, Netherlands, Norway, Poland, Portugal, Romania, Slovak Republic, Slovenia, Spain, Sweden, Switzerland, and United Kingdom.

China CMIIT Wireless Statement

中国无线电发射设备通告

型号核准代码显示在产品本体的铭牌上。

Notice for use in Japan

この機器は技術基準適合証明又は工事設計認証を受けた無線設備を搭載しています。

Notice for use in Russia

Существуют определенные ограничения по использованию беспроводных сетей (стандарта 802.11 b/g) с рабочей частотой 2,4 ГГц: Данное оборудование может использоваться внутри помещений с использованием диапазона частот 2400-2483,5 МГц (каналы 1-13). При использовании внутри помещений максимальная эффективная изотропно-излучаемая мощность (ЭИИМ) должна составлять не более 100мВт.

Mexico statement

Aviso para los usuarios de México

"La operación de este equipo está sujeta a las siguientes dos condiciones: (1) es posible que este equipo o dispositivo no cause interferencia perjudicial y (2) este equipo o dispositivo debe aceptar cualquier interferencia, incluyendo la que pueda causar su operación no deseada."

Para saber el modelo de la tarjeta inalámbrica utilizada, revise la etiqueta regulatoria de la impresora.

Taiwan statement

取得審驗證明之低功率射頻器材，非經核准，公司、商號或使用者均不得擅自變更頻率、加大功率或變更原設計之特性及功能。低功率射頻器材之使用不得影響飛航安全及干擾合法通信；經發現有干擾現象時，應立即停用，並改善至無干擾時方得繼續使用。前述合法通信，指依電信管理法規定作業之無線電通信。低功率射頻器材須忍受合法通信或工業、科學及醫療用電波輻射性電機設備之干擾。

Taiwan NCC statement

應避免影響附近雷達系統之操作。

高增益指向性天線只得應用於固定式點對點系統。

Korean statement

무선 전용제품:

해당 무선설비는 전파혼신 가능성이 있음으로 인명안전과 관련된 서비스는 할 수 없음.

(무선모듈제품이설치되어있는경우)

Thailand Wireless Statement

เครื่องวิทยุคมนาคมนี้มีระดบั การแผ่คลื่นแม่เหล็กไฟฟ้ าสอดคล้องตามมาตรฐานความปลอดภยั ต่อสุขภาพของมนุษย์จากการ ใช้เครื่องวิทยุคมนาคมที่คณะกรรมการกิจการโทรคมนาคมแห่งชาติประกาศกำหนด

This radio communication equipment has the electromagnetic field strength in compliance with the Safety Standard for the Use of Radio Communication Equipment on Human Health announced by the National Telecommunications Commission.

RFID/NFC Statement

China Short Range Device Statement

若产品为微功率短距离无线电发射设备，在此承诺：本设备符合《微功率短距离无线电发射设备目录和技术要求》，不擅自做任何改变，不会对其他合法的无线电台（站）产生有害干扰，也不会提出免受有害干扰保护，不会在任何管制区域内使用.

Index

Symbols/Numerics

550-sheet paper trays
  part numbers 28
550-sheet tray
  jams 98, 114

A

accessories
  ordering 27
  part numbers 28
acoustic specifications 13
Address Book
  set up 59
AirPrint 49, 51
alternative letterhead mode 15
Android devices
  printing from 49, 51
anticounterfeit supplies 159, 170
applications
  downloading 79
Apps menu 79

B

batteries included 177, 178
bin, output
  locating 2
browser requirements
  HP Embedded Web Server 80

C

cartridge
  replacing 33, 35
cartridge policy 29, 30
cartridge protection 29, 31
cartridges
  non-HP 159, 170
  order numbers 33
  recycling 177, 178
  warranty 159, 169
checklist
  fax troubleshooting 155
  wireless connectivity 152
China Short Range Device
  Statement 197
cleaning
  glass 144, 149
  paper path 131
Contact Lists
  set up 59
control panel
  help 90
  locating 2
  locating features 4
copying
  edges of documents 144, 147
  multiple copies 53
  optimizing for text or
    pictures 144
  overview 53
  setting paper size and
    type 144
  single copies 53
  two-sided documents 53
counterfeit supplies 159, 170
customer support
  online 90, 159, 176

D

deleting
  stored jobs 44, 48
dimensions, printer 11
disposal, end-of-life 177, 178
document feeder 53
  copying two-sided
    documents 53
  faxing from 72
  jams 98, 100
  paper-feeding problems 97
double-sided copying 53
double-sided printing
  Mac 42
  Windows 39
drivers, supported 9
duplex 53
duplex printing
  Mac 42
duplex printing (double-sided)
  settings (Windows) 39
  Windows 39
duplexer
  clear jams 127
  jams 98
duplexing
  automatically (Windows) 40
  manually (Mac) 42
  manually (Windows) 39
Dynamic Security Enabled
  Printers 27, 87, 170

E

EconoMode setting 85, 131
economy settings 85
electronic faxes
  sending 72
electronic hardware
  recycling 177, 179
Embedded Web Server (EWS)
  assigning passwords 85
  features 80
end-of-life disposal 177, 178
envelopes
  loading 25
  orientation 25
environmental stewardship
  program 177
Eurasian conformity 186, 190

F

fax
  sending from software 72
  solve general problems 155,
    156
  speed dials 72, 76
fax troubleshooting
  checklist 155
faxing
  from a computer
    (Windows) 72
  from the document feeder 72
  from the flatbed scanner 72
FCC regulations 186
Finnish laser safety
  statement 186, 188
firmware
  updating 88
formatter
  locating 3
fraud Web site 159, 170
fuser
  jams 98

G

genuine HP cartridges 29, 30
glass, cleaning 144, 149

H

hardware recycling, Brazil 177, 179
Help button
  locating 4
help, control panel 90
Home button
  locating 4
HP Customer Care 90, 159, 176
HP Easy Scan Software
  (macOS) 56
HP Embedded Web Server (EWS)
  features 80
HP ePrint 50
HP EWS, using 80
HP fraud Web site 159, 170
HP Printer Home Page, using 80
HP Scan software (Windows) 56
HP Web Jetadmin 87
HP Web Services
  applications 79
  enabling 79

I

image quality
  check toner-cartridge
    status 131, 132
image quality issues
  examples and solutions 130
IP network settings
  configure 82

J

jams
  550-sheet tray 98, 114
  document feeder 98, 100
  duplexer 98, 127
  fuser 98
  locations 98, 99
  output bin 98, 123
  Toner cartridge 119
  Tray 1 98, 103
  Tray 2 98, 108
  Tray 3 114
Japanese VCCI statement 186,
  187
Jetadmin, HP Web 87
jobs, stored
  creating (Windows) 44
  deleting 44, 48
  Mac settings 44
  printing 44

K

Korean EMC statement 186

L

laser safety statements 186, 188
license, software 159, 171
loading
  paper in Tray 1 15
  paper in Tray 2 19
  paper in Tray 3 22

M

Mac driver settings
  Job Storage 44
manual duplex
  Mac 42
  Windows 39
material restrictions 177, 178
Material Safety Data Sheet
  (MSDS) 177, 182
memory
  included 7
memory chip (toner)
  locating 33
memory chip, toner cartridge
  description 159, 171
mercury-free product 177, 178
Microsoft Word, faxing from 72
mobile printing
  Android devices 49, 51
mobile printing, software
  supported 10
multiple pages per sheet
  printing (Mac) 42
  printing (Windows) 39

N

network settings 82
networks
  HP Web Jetadmin 87
  supported 7
non-HP supplies 159, 170
number of copies, changing 53

O

on/off button
  locating 2
online help, control panel 90
online support 90, 159, 176
Open source license 2
operating systems, supported 9
ordering
  supplies and accessories 27
output bin
  clear jams 98, 123
  locating 2

P

pages per minute 7
pages per sheet
  selecting (Mac) 42
  selecting (Windows) 39
paper
  jams 98
  loading Tray 1 15
  loading Tray 2 19
  loading Tray 3 22
  selecting 131, 134
  Tray 1 orientation 15, 18
  Tray 2 orientation 21
  Tray 3 orientation 24
paper jams
  550-sheet tray 98, 114
  document feeder 98, 100
  duplexer 98, 127
  fuser 98
  locations 98, 99
  output bin 98, 123
  toner cartridge 119
  Tray 1 98, 103
  Tray 2 98, 108
  Tray 3 114
paper pickup problems
  solving 93, 95
paper trays
  overview 15
  part numbers 28
paper type
  selecting (Windows) 39
paper types
  selecting (Mac) 42
paper, ordering 27
part numbers
  accessories 28
  replacement parts 28
  supplies 28
  toner cartridges 28, 33
phone book, fax
  adding entries 72, 76
potential shock hazard 2
power
  consumption 13

power connection
locating 3
power switch
locating 2
print drivers, supported 9
print media
loading in Tray 1 15
print on both sides
Mac 42
manually, Windows 39
Windows 39
printer
overview 1
printing
from USB flash drives 51
overview 39
stored jobs 44
printing on both sides
settings (Windows) 39
private printing 44
protect cartridges 29, 31

R

recycling 177, 178
electronic hardware 177, 179
replacement parts
part numbers 28
replacing
toner cartridge 33
toner cartridges 35

S

safety statements 186, 188
scan setup
scan to computer 63
scan to email 57
scan to network folder 60
scan to SharePoint 63
Scan to Email
set up with EWS 59
Scan to Folder
set up with EWS 62
scanner
faxing from 72
glass cleaning 144, 149
scanning
from HP Easy Scan Software (macOS) 56
from HP Scan software (Windows) 56
to computer 66
to email 65
to network folder 65
to SharePoint 66
to USB drive 64
security features 85
sending faxes
from software 72
shut down after delay
setting 85
Sign In button
locating 4
Sign Out button
locating 4
sleep delay
setting 85
software
sending faxes 72
software license agreement 159, 171
solve problems
fax 155, 156
speed dials
deleting entries 76
editing entries 76
programming 72
storage, job
Mac settings 44
store print jobs 44
stored jobs
creating (Mac) 44
creating (Windows) 44
deleting 44, 48
printing 44
storing jobs
with Windows 44
supplies
counterfeit 159, 170
low threshold settings 91
non-HP 159, 170
ordering 27
part numbers 28
recycling 177, 178
replacing toner cartridge 33
replacing toner cartridges 35
using when low 91
support
online 90, 159, 176
supported operating systems 9
system requirements
HP Embedded Web Server 80

T

Taiwan EMI statement 186
technical support
online 90, 159, 176
toner cartridge
components 33
low threshold settings 91
replacing 33
using when low 91
Toner Cartridge
jams 119
toner cartridges
components 33
memory chips 159, 171
non-HP 159, 170
order numbers 33
part numbers 28, 33
recycling 177, 178
replacing 35
See toner cartridges
warranty 159, 169
toner-collection unit
locating 3
touchscreen
locating features 4
Tray 1
jams 98, 103
loading envelopes 25
paper orientation 15, 18
Tray 2
jams 98, 108
loading 19
Tray 2
paper orientation 21
Tray 3
jams 114
loading 22
paper orientation 24
trays
capacity 7
included 7
locating 2
troubleshooting
check toner-cartridge status 131, 132
faxes 155
jams 98
network problems 150
overview 90
paper feed problems 93
print quality 131
wired network 150
wireless network 152
two-sided copying 53
two-sided printing
settings (Windows) 39

U

USB flash drives
printing from 51

W

walk-up USB printing 51
warranty
  customer self repair 159, 175
  license 159, 171
  product 159
  toner cartridges 159, 169
waste disposal 177, 179
web browser requirements
  HP Embedded Web Server 80
Web Services
  applications 79
  enabling 79
Web sites
  customer support 90, 159, 176
  fraud reports 159, 170
  Material Safety Data Sheet (MSDS) 177, 182
websites
  HP Web Jetadmin, downloading 87
weight, printer 11
Wi-Fi Direct Print 10
Wi-Fi Direct Printing 49
Windows
  faxing from 72
wireless network
  troubleshooting 152
wireless network
  interference 152, 155
Word, faxing from 72