AOC GAMING

LCD Monitor User Manual

25G3ZM/BK

www.aoc.com

©2022 AOC.All Rights Reserved

HDMI®
HIGH-DEFINITION MULTIMEDIA INTERFACE

Safety 1
National Conventions 1
Power 2
Installation 3
Cleaning 4
Other 5

Setup 6
Contents in Box 6
Setup Stand & Base 7
Adjusting Viewing Angle 8
Connecting the Monitor 9
Wall Mounting 10
AMD FreeSync Premium function (Available for selective models) 11

Adjusting 12
Hotkeys 12
OSD Setting 13
Luminance 14
Color Setup 15
Picture Boost 16
OSD Setup 17
Game Setting 18
Extra 19
Exit 20
LED Indicator 21

Troubleshoot 22

Specification 23
General Specification 23
Preset Display Modes 24
Pin Assignments 25
Plug and Play 26

Safety

National Conventions

The following subsections describe notational conventions used in this document.

Notes, Cautions, and Warnings

Throughout this guide, blocks of text may be accompanied by an icon and printed in bold type or in italic type. These blocks are notes, cautions, and warnings, and they are used as follows:

NOTE: A NOTE indicates important information that helps you make better use of your computer system.

CAUTION: A CAUTION indicates either potential damage to hardware or loss of data and tells you how to avoid the problem.

WARNING: A WARNING indicates the potential for bodily harm and tells you how to avoid the problem. Some warnings may appear in alternate formats and may be unaccompanied by an icon. In such cases, the specific presentation of the warning is mandated by regulatory authority.

Power

The monitor should be operated only from the type of power source indicated on the label. If you are not sure of the type of power supplied to your home, consult your dealer or local power company.

The monitor is equipped with a three-pronged grounded plug, a plug with a third (grounding) pin. This plug will fit only into a grounded power outlet as a safety feature. If your outlet does not accommodate the three-wire plug, have an electrician install the correct outlet, or use an adapter to ground the appliance safely. Do not defeat the safety purpose of the grounded plug.

Unplug the unit during a lightning storm or when it will not be used for long periods of time. This will protect the monitor from damage due to power surges.

Do not overload power strips and extension cords. Overloading can result in fire or electric shock.

To ensure satisfactory operation, use the monitor only with UL listed computers which have appropriate configured receptacles marked between 100-240V AC, Min. 5A.

The wall socket shall be installed near the equipment and shall be easily accessible.

Installation

Do not place the monitor on an unstable cart, stand, tripod, bracket, or table. If the monitor falls, it can injure a person and cause serious damage to this product. Use only a cart, stand, tripod, bracket, or table recommended by the manufacturer or sold with this product. Follow the manufacturer's instructions when installing the product and use mounting accessories recommended by the manufacturer. A product and cart combination should be moved with care.

Never push any object into the slot on the monitor cabinet. It could damage circuit parts causing a fire or electric shock. Never spill liquids on the monitor.

Do not place the front of the product on the floor.

If you mount the monitor on a wall or shelf, use a mounting kit approved by the manufacturer and follow the kit instructions.

Leave some space around the monitor as shown below. Otherwise, air-circulation may be inadequate hence overheating may cause a fire or damage to the monitor.

To avoid potential damage, for example the panel peeling from the bezel, ensure that the monitor does not tilt downward by more than -5 degrees. If the -5 degree downward tilt angle maximum is exceeded, the monitor damage will not be covered under warranty.

See below the recommended ventilation areas around the monitor when the monitor is installed on the wall or on the stand:

Installed with stand

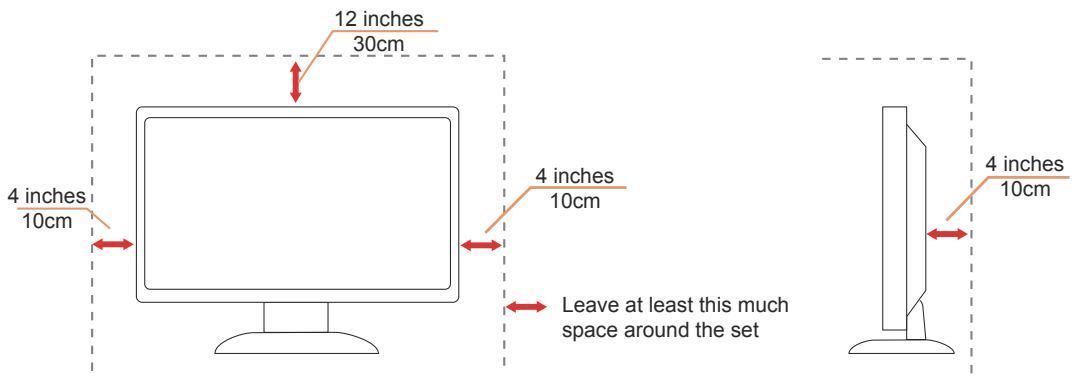

Cleaning

Clean the cabinet regularly with a water-dampened, soft cloth.

When cleaning use a soft cotton or microfiber cloth. The cloth should be damp and almost dry, do not allow liquid into the case.

Please disconnect the power cord before cleaning the product.

Other

If the product is emitting a strange smell, sound or smoke, disconnect the power plug IMMEDIATELY and contact a Service Center.

Make sure that the ventilating openings are not blocked by a table or curtain.

Do not engage the LCD monitor in severe vibration or high impact conditions during operation.

Do not knock or drop the monitor during operation or transportation.

The power cords shall be safety approved. For Germany, it shall be H03VV-F/H05VV-F, 3G, 0.75 mm^2, or better.For other countries, the suitable types shall be used accordingly.

Excessive sound pressure from earphones and headphones can cause hearing loss. Adjustment of the equalizer to maximum increases the earphones and headphones output voltage and therefore the sound pressure level.

Setup

Contents in Box

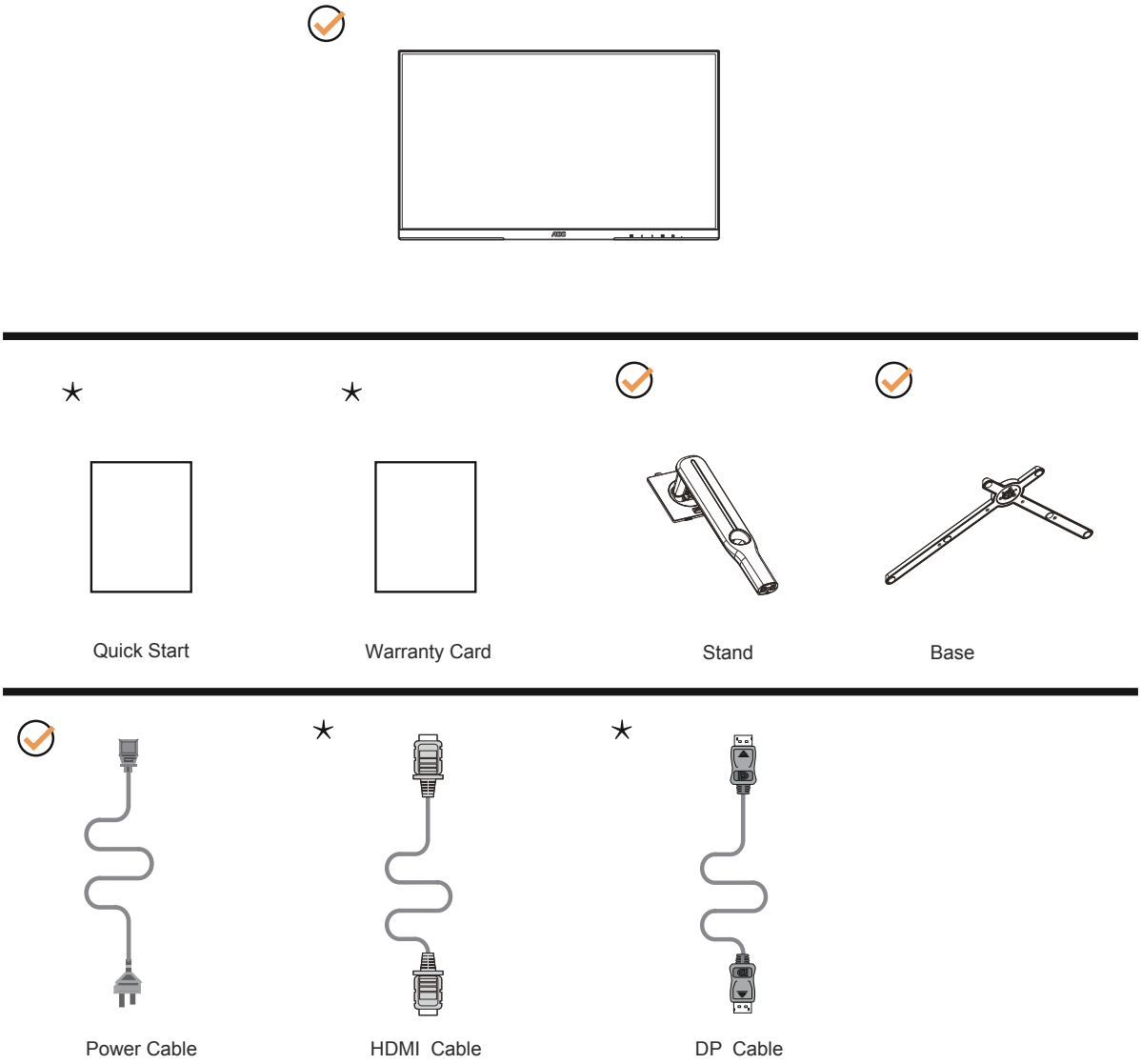

*Not all signal cables will be provided for all countries and regions. Please check with the local dealer or AOC branch office for confirmation.

Setup Stand & Base

Please setup or remove the base following the steps as below.

Setup:

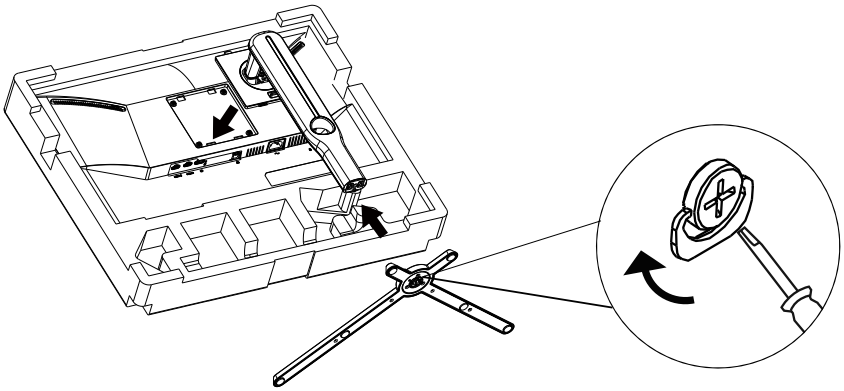

Remove:

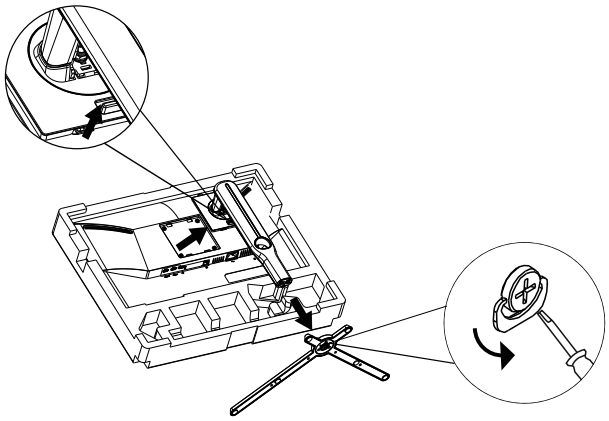

Adjusting Viewing Angle

For optimal viewing it is recommended to look at the full face of the monitor, then adjust the monitor's angle to your own preference.
Hold the stand so you will not topple the monitor when you change the monitor's angle.
You are able to adjust the monitor as below:

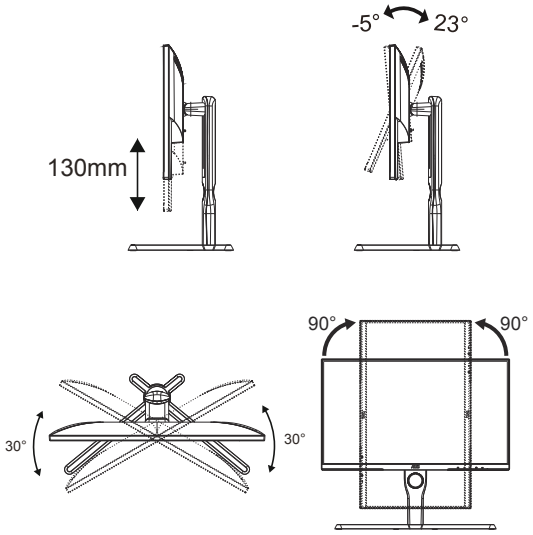

NOTE:

Do not touch the LCD screen when you change the angle. Touching the LCD screen may cause damage.

Warning

- To avoid potential screen damage, such as panel peeling, ensure that the monitor does no t tilt downward by more than -5 degrees.
- Do not press the screen while adjusting the angle of the monitor. Grasp only the bezel.

Connecting the Monitor

Cable Connections In Back of Monitor and Computer:

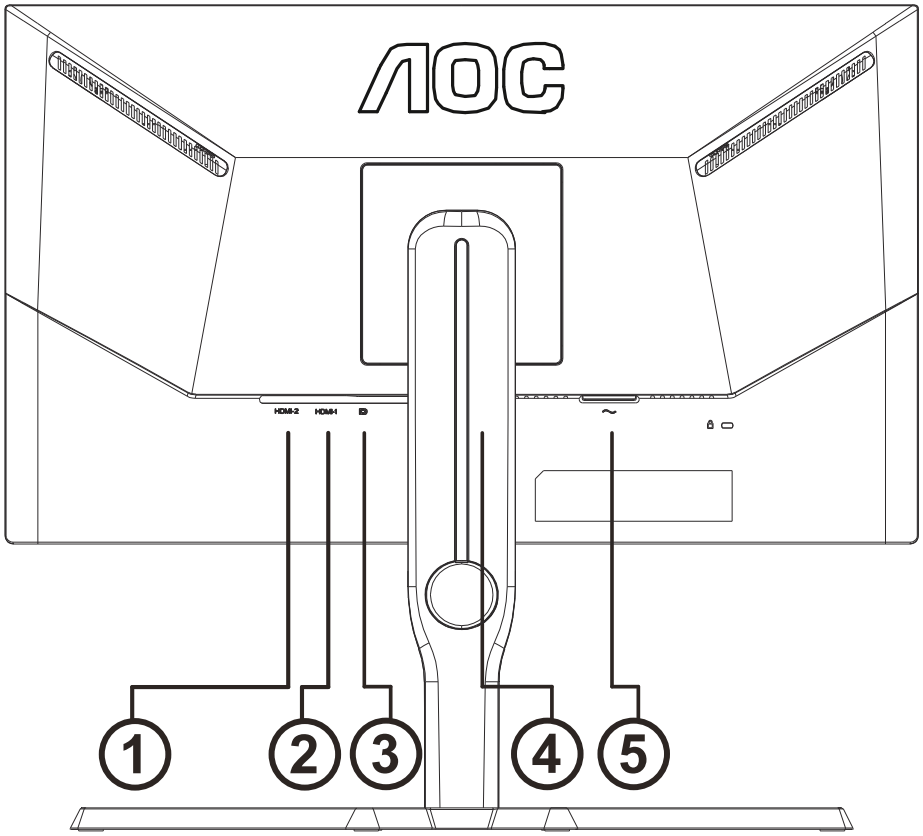

1. HDMI-2
2. HDMI-1
3. DisplayPort
4. Earphone
5. Power

Connect to PC

1. Connect the power cord to the back of the display firmly.
2. Turn off your computer and unplug its power cable.
3. Connect the display signal cable to the video connector on the back of your computer.
4. Plug the power cord of your computer and your display into a nearby outlet.
5. Turn on your computer and display.

If your monitor displays an image, installation is complete. If it does not display an image, please refer Troubleshooting.

To protect equipment, always turn off the PC and LCD monitor before connecting.

Wall Mounting

Preparing to Install An Optional Wall Mounting Arm.

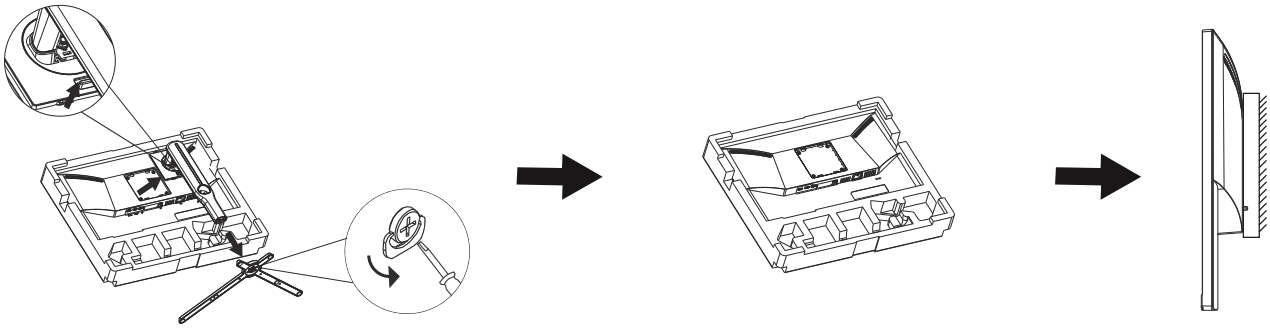

This monitor can be attached to a wall mounting arm you purchase separately. Disconnect power before this procedure. Follow these steps:

1. Remove the base.
2. Follow the manufacturer's instructions to assemble the wall mounting arm.
3. Place the wall mounting arm onto the back of the monitor. Line up the holes of the arm with the holes in the back of the monitor.
4. Insert the 4 screws into the holes and tighten.
5. Reconnect the cables. Refer to the user's manual that came with the optional wall mounting arm for instructions on attaching it to the wall.

Note: VESA mounting screw holes are not available for all models, please check with the dealer or official department of AOC.

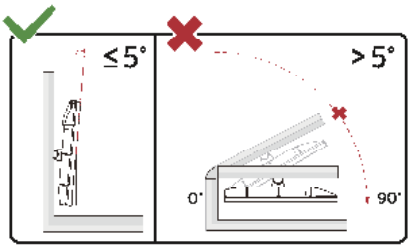

* Display design may differ from those illustrated.

WARNING:

1. To avoid potential screen damage, such as panel peeling, ensure that the monitor does not tilt downward by more than -5 degrees.
2. Do not press the screen while adjusting the angle of the monitor. Grasp only the bezel.

AMD FreeSync Premium function (Available for selective models)

1. AMD Freesync premium function is working with DP/HDMI
2. Compatible Graphics Card: Recommend list is as the below, also could be checked by visiting www.AMD.com

- Radeon™ RX Vega series
- Radeon™ RX 500 series
- Radeon™ RX 400 series
- Radeon™ R9/R7 300 series （R9 370/X, R7 370/X, R7 265 except）
- Radeon™ Pro Duo (2016)
- Radeon™ R9 Nano series
- Radeon™ R9 Fury series
- Radeon™ R9/R7 200 series (R9 270/X, R9 280/X except)

Procesori

- AMD Ryzen™ 7 2700U
- AMD Ryzen™ 5 2500U
- AMD Ryzen™ 5 2400G
- AMD Ryzen™ 3 2300U
- AMD Ryzen™ 3 2200G
- AMD PRO A12-9800
- AMD PRO A12-9800E
- AMD PRO A10-9700
- AMD PRO A10-9700E
- AMD PRO A8-9600
- AMD PRO A6-9500
- AMD PRO A6-9500E
- AMD PRO A12-8870
- AMD PRO A12-8870E
- AMD PRO A10-8770
- AMD PRO A10-8770E
- AMD PRO A10-8750B
- AMD PRO A8-8650B
- AMD PRO A6-8570
- AMD PRO A6-8570E
- AMD PRO A4-8350B
- AMD A10-7890K
- AMD A10-7870K
- AMD A10-7850K
- AMD A10-7800
- AMD A10-7700K
- AMD A8-7670K
- AMD A8-7650K
- AMD A8-7600
- AMD A6-7400K

Adjusting

Hotkeys

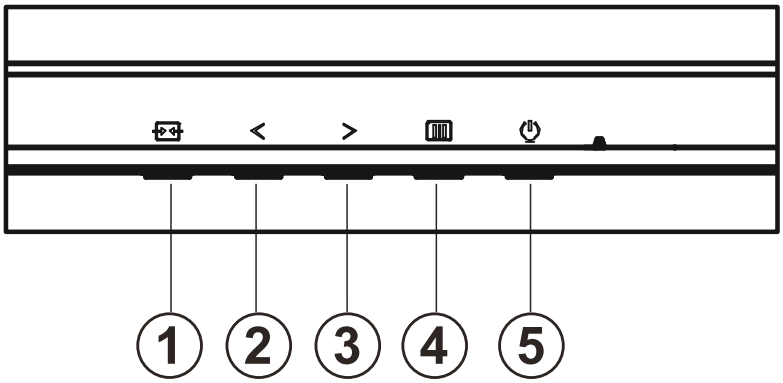

1	Source/Exit
2	Game Mode/<
3	Dial Point/>
4	Menu/Enter
5	Power

Menu/Enter

Press to display the OSD or confirm the selection.

Power

Press the Power button to turn on the monitor.

Dial Point/>

When there is no OSD, press Dial Point button to show / hide Dial Point.

Game Mode/<

When there is no OSD, press "<" key to open game mode function, then press "<" or ">" key to select game mode (FPS, RTS, Racing, Gamer 1, Gamer 2 or Gamer 3) basing on the different game types.

Source/Exit

When the OSD is closed, press Source/Exit button will be Source hot key function.

OSD Setting

Basic and simple instruction on the control keys.

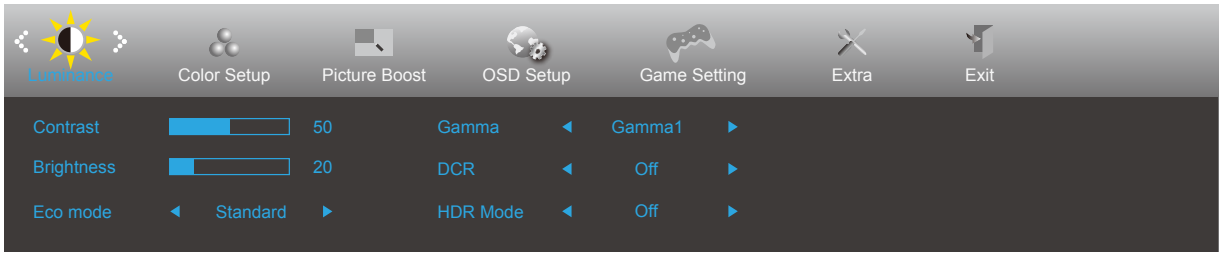

1). Press the [III] **MENU-button** to activate the OSD window.

2). Press < **Left** or > **Right** to navigate through the functions. Once the desired function is highlighted, press the [III] **MENU-button** to activate it, press < **Left** or > **Right** to navigate through the sub-menu functions. Once the desired function is highlighted, press [III] **MENU-button** to activate it.

3). Press < **Left** or > to change the settings of the selected function. Press [→←] to exit. If you want to adjust any other function, repeat steps 2-3.

4). OSD Lock Function: To lock the OSD, press and hold the [III] MENU-button while the monitor is off and then press ⏻ power button to turn the monitor on. To un-lock the OSD - press and hold the [III] MENU-button while the monitor is off and then press ⏻ power button to turn the monitor on.

Notes:

1). If the product has only one signal input, the item of “Input Select” is disable to adjust.

2). ECO modes (except Standard mode), DCR, DCB mode and Picture Boost, for these four states that only one state can exist.

3). Only one of ECO Mode (except Standard Mode), DCR, DCB Mode and Picture Boost can be displayed in one time.

Luminance

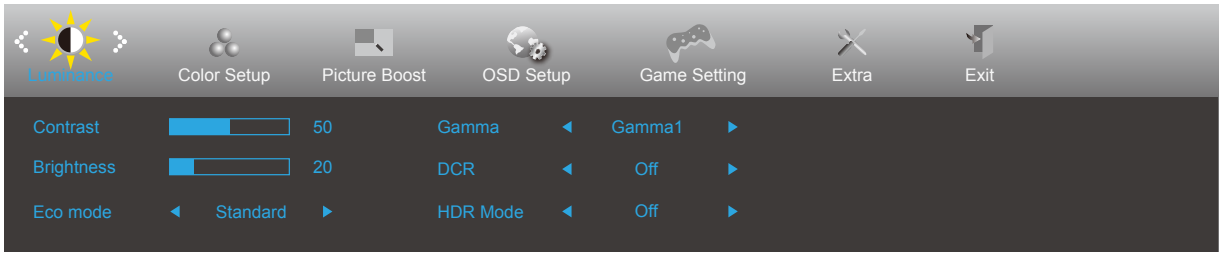

	Contrast	0-100		Contrast from Digital-register.
	Brightness	0-100		Backlight Adjustment.
	Eco mode	Standard		Standard Mode.
		Text		Text Mode.
		Internet		Internet Mode.
		Game		Game Mode.
		Movie		Movie Mode.
		Sports		Sports Mode.
		Reading		Reading Mode.
	Gamma	Gamma1		Adjust to Gamma 1.
		Gamma2		Adjust to Gamma 2.
		Gamma3		Adjust to Gamma 3.
	DCR	Off		Disable dynamic contrast ratio.
		On		Enable dynamic contrast ratio.
	HDR Mode	Off		Optimized for the color and contrast of the picture, which will simulate showing the HDR effect. Note: When HDR is not detected, the HDR Mode option is displayed for adjustment.
		HDR Picture		
		HDR Movie		
		HDR Game		

Note:

When “HDR Mode” is set to “non-off”, the items “Contrast”, “Eco Mode”, “Gamma” cannot be adjusted.

Color Setup

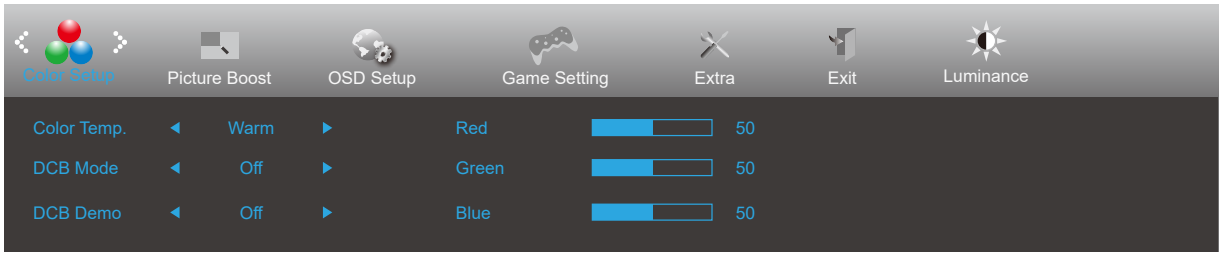

	Color Temp.	Warm	Recall Warm Color Temperature from EEPROM.
		Normal	Recall Normal Color Temperature from EEPROM.
		Cool	Recall Cool Color Temperature from EEPROM.
		sRGB	Recall SRGB Color Temperature from EEPROM.
		User	Restore Color Temperature from EEPROM.
	DCB Mode	Off	Disable DCB Mode.
		Full Enhance	Enable Full Enhance Mode.
		Nature Skin	Enable Nature Skin Mode.
		Green Field	Enable Green Field Mode.
		Sky-blue	Enable Sky-blue Mode.
		Auto Detect	Enable AutoDetect Mode.
	DCB Demo	On or Off	Disable or Enable Demo.
	Red	0-100	Red gain from Digital-register.
	Green	0-100	Green gain from Digital-register.
	Blue	0-100	Blue gain from Digital-register.

Note:

When “HDR Mode” under “Luminance” is set to “non-off”, all items under “Color Setup” cannot be adjusted.

Picture Boost

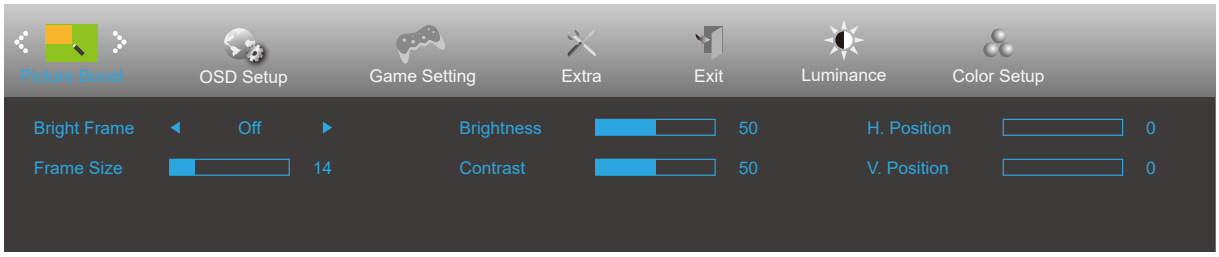

	Bright Frame	On or Off	Disable or Enable Bright Frame.
	Frame Size	14-100	Adjust Frame Size.
	Brightness	0-100	Adjust Frame Brightness.
	Contrast	0-100	Adjust Frame Contrast.
	H. position	0-100	Adjust Frame horizontal Position.
	V. position	0-100	Adjust Frame vertical Position.

Note:

Adjust the brightness, contrast, and position of the Bright Frame for better viewing experience.

When “HDR Mode” under “Luminance” is set to “non-off”, all items under “Picture Boost” cannot be adjusted.

OSD Setup

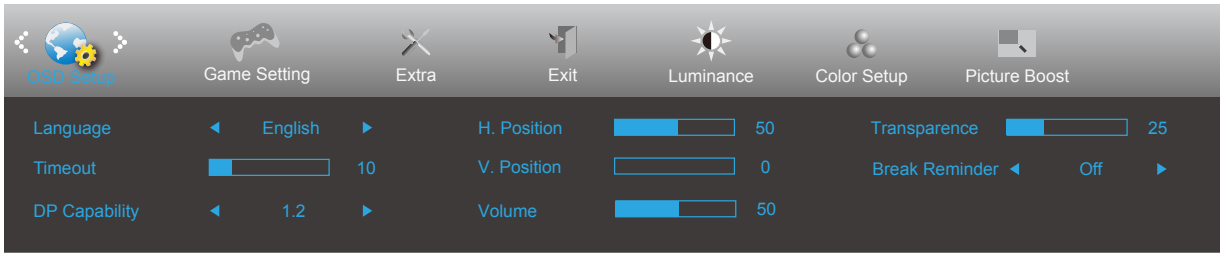

	Language		Select the OSD language.
	Timeout	5-120	Adjust the OSD Timeout.
	DP Capability	1.1/1.2	If the DP video content supports DP1.2, please select DP1.2 for DP Capability; otherwise, please select DP1.1. Please be noted that only DP1.2 support AMD FreeSync function.
	H. Position	0-100	Adjust the horizontal position of OSD.
	V. Position	0-100	Adjust the vertical position of OSD.
	Volume	0-100	Volume Adjustment.
	Transparence	0-100	Adjust the transparence of OSD.
	Break Reminder	On or Off	Break reminder if the user continuously work for more than 1hrs.

Game Setting

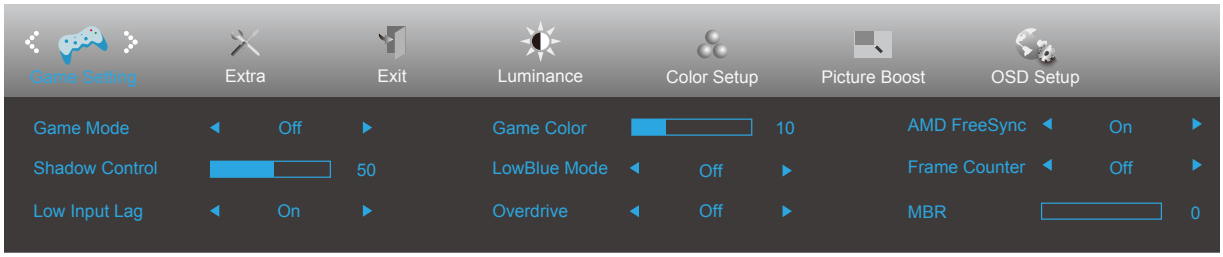

	Game Mode	Off	No optimization by Smart image game
		FPS	For playing FPS (First Person Shooter) games. Improves dark theme black level details.
		RTS	For playing RTS (Real Time Strategy). Improves the image quality.
		Racing	For playing Racing games, Provides fastest response time and high color saturation.
		Gamer 1	User's preference settings saved as Gamer 1.
		Gamer 2	User's preference settings saved as Gamer 2.
		Gamer 3	User's preference settings saved as Gamer 3.
	Shadow Control	0-100	Shadow Control Default is 50, then end-user can adjust from 50 to 100 or 0 to increase contrast for clear picture. 1. If picture is too dark to be saw the detail clearly, adjusting from 50 to100 for clear picture. 2. If picture is too white to be saw the detail clearly, adjusting from 50 to0 for clear picture
	Low Input Lag	On/Off	Turn off frame buffer to decrease input lag
	Game Color	0-20	Game Color will provide 0-20 level for adjusting saturation to get better picture.
	Low Blue Mode	Off / Multimedia / Internet / Office / Reading /	Decrease blue light wave by controlling color temperature.
	Overdrive	Off	Adjust the response time.
		Weak	
		Medium	
		Strong	
		Boost	
	AMD FreeSync	On or Off	Adjust the AMD FreeSync Premium..
	Frame Counter	Off / Right-up / Right-Down / Left-Down / Left-Up	Display V frequency on the corner selected
	MBR	0 ~ 20	Adjust the Motion Blur Reduction.

Note:

When "HDR Mode" under "Luminance" is set to "non-off", the items "Game Mode", "Shadow Control", "Game Color", "Low Blue Mode" cannot be adjusted.

Extra

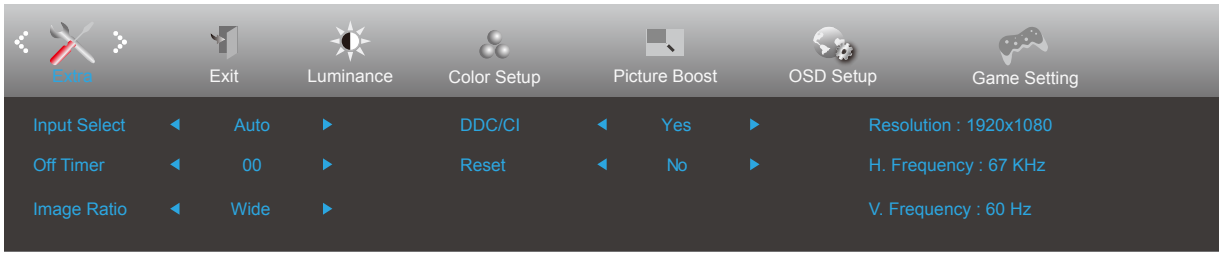

	Input Select	Auto/HDMI1/HDMI2/DP	Select Input Signal Source.
	Off timer	0-24hrs	Select DC off time.
	Image Ratio	Wide / 4:3 / 1:1 / 17”(4:3) / 19”(4:3) / 19”(5:4) 19”W(16:10) / 21.5”W(16:9) / 22”W(16:10) / 23”W(16:9) / 23.6”W (16:9) / 24”W(16:9)	Select image ratio for display.
	DDC/CI	Yes or No	Turn ON/OFF DDC/CI Support.
	Reset	Yes or No	Reset the menu to default.

Exit

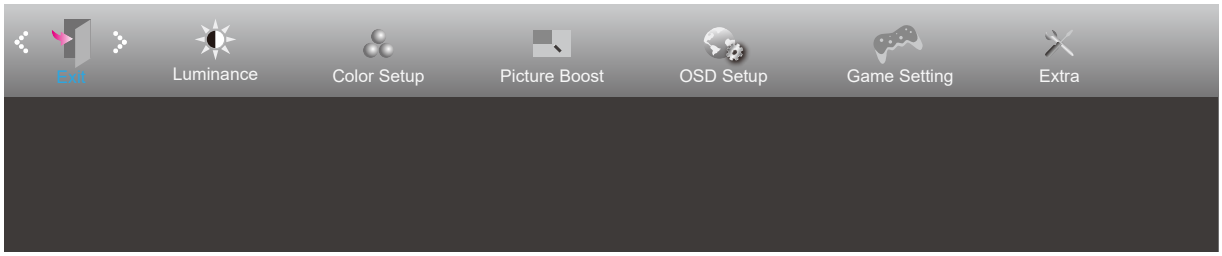

	Exit		Exit the main OSD

LED Indicator

Status	LED Color
Full Power Mode	White
Active-off Mode	Orange

Troubleshoot

Problem & Question	Possible Solutions
Power LED Is Not ON	Make sure the power button is ON and the Power Cord is properly connected to a grounded power outlet and to the monitor.
No images on the screen	• Is the power cord connected properly? Check the power cord connection and power supply. • Is the video cable connected correctly? (Connected using the VGA cable) Check the VGA cable connection. (Connected using the HDMI cable) Check the HDMI cable connection. (Connected using the DP cable) Check the DP cable connection. * VGA/HDMI/DP input is not available on every model. • If the power is on, reboot the computer to see the initial screen (the login screen.) If the initial screen (the login screen) appears, boot the computer in the applicable mode (the safe mode for Windows 7/8/10) and then change the frequency of the video card. (Refer to the Setting the Optimal Resolution) If the initial screen (the login screen) does not appear, contact the Service Center or your dealer. • Can you see “Input Not Supported” on the screen? You can see this message when the signal from the video card exceeds the maximum resolution and frequency that the monitor can handle properly. Adjust the maximum resolution and frequency that the monitor can handle properly. • Make sure the AOC Monitor Drivers are installed.
Picture Is Fuzzy & Has Ghosting Shadowing Problem	Adjust the Contrast and Brightness Controls. Press hot-key (AUTO) to auto-adjust. Make sure you are not using an extension cable or switch box. We recommend plugging the monitor directly to the video card output connector on the back.
Picture Bounces, Flickers Or Wave Pattern Appears In The Picture	Move electrical devices that may cause electrical interference as far away from the monitor as possible. Use the maximum refresh rate your monitor is capable of at the resolution you are using.
Monitor Is Stuck In Active Off-Mode”	The Computer Power Switch should be in the ON position. The Computer Video Card should be snugly fitted in its slot. Make sure the monitor’s video cable is properly connected to the computer. Inspect the monitor’s video cable and make sure no pin is bent. Make sure your computer is operational by hitting the CAPS LOCK key on the keyboard while observing the CAPS LOCK LED. The LED should either turn ON or OFF after hitting the CAPS LOCK key.
Missing one of the primary colors (RED, GREEN, or BLUE)	Inspect the monitor’s video cable and make sure that no pin is damaged. Make sure the monitor’s video cable is properly connected to the computer.
Screen image is not centered or sized properly	Adjust H-Position and V-Position or press hot-key (AUTO).
Picture has color defects (white does not look white)	Adjust RGB color or select desired color temperature.
Horizontal or vertical disturbances on the screen	Use Windows 7/8/10 shut-down mode to adjust CLOCK and FOCUS. Press hot-key (AUTO) to auto-adjust.
Regulation & Service	Please refer to Regulation & Service Information which is in the CD manual or www.aoc.com (to find the model you purchase in your country and to find Regulation & Service Information in Support page.

Specification

General Specification

Panel	Model name	25G3ZM/BK	
	Driving system	TFT Color LCD	
	Viewable Image Size	62.2 cm diagonal（24.5”）	
	Pixel pitch	0.2832mm(H) x 0.2802mm(V)	
	Video	HDMI Interface & DP Interface	
	Separate Sync.	H/V TTL	
	Display Color	16.7M Colors	
Others	Horizontal scan range	30k-255kHZ	
	Horizontal scan Size(Maximum)	543.74mm	
	Vertical scan range	48-240Hz	
	Vertical Scan Size(Maximum)	302.62mm	
	Optimal preset resolution	1920x1080@60Hz	
	Max resolution	1920x1080@240Hz	
	Plug & Play	VESA DDC2B/CI	
	Power Source	100-240V~, 50/60Hz, 1.5A	
	Power Consumption	Typical(default brightness and contrast)	25W
		Max. (brightness = 100, contrast =100)	≤39W
		Standby mode	≤0.3W
Physical Characteristics	Connector Type	HDMI/DP/Earphone out	
	Signal Cable Type	Detachable	
Environmental	Temperature	Operating	0°~ 40°
		Non-Operating	-25°~ 55°
	Humidity	Operating	10% ~ 85% (non-condensing)
		Non-Operating	5% ~ 93% (non-condensing)
	Altitude	Operating	0~ 5000 m (0~ 16404ft)
		Non-Operating	0~ 12192m (0~ 40000ft)

Preset Display Modes

STANDARD	RESOLUTION	HORIZONTAL FREQUENCY(KHz)	VERTICAL FREQUENCY(Hz)
VGA	640x480@60Hz	31.469	59.94
	640x480@72Hz	37.861	72.809
	640x480@75Hz	37.5	75
	640x480@100Hz	50.313	99.826
	640x480@120Hz	60.938	119.72
SVGA	800x600@56Hz	35.156	56.25
	800x600@60Hz	37.879	60.317
	800x600@72Hz	48.077	72.188
	800x600@75Hz	46.875	75
	800x600@100Hz	62.76	99.778
	800x600@120Hz	76.302	119.972
XGA	1024x768@60Hz	48.363	60.004
	1024x768@70Hz	56.476	70.069
	1024x768@75Hz	60.023	75.029
	1024x768@100Hz	80.448	99.811
	1024x768@120Hz	97.551	119.989
SXGA	1280x1024@60Hz	63.981	60.02
	1280x1024@75Hz	79.976	75.025
WXGA+	1440x900@60Hz	55.935	59.887
	1440x900@60Hz	55.469	59.901
WSXGA	1680x1050@60Hz	65.29	59.954
	1680x1050@60Hz	64.674	59.883
FHD	1920x1080@60Hz	67.5	60
	1920x1080@100Hz	113.221	99.93
	1920x1080@120Hz	137.26	119.982
	1920x1080@144Hz	158.113	144.001
	1920x1080@165Hz	183.154	165.003
	1920x1080@240Hz	274.519	239.964
IBM MODES			
DOS	640x350@70Hz	31.469	70.087
DOS	720x400@70Hz	31.469	70.087
MAC MODES			
VGA	640x480@67Hz	35	66.667
SVGA	832x624@75Hz	49.725	74.551
XGA	1024x768@75Hz	60.241	74.927

Pin Assignments

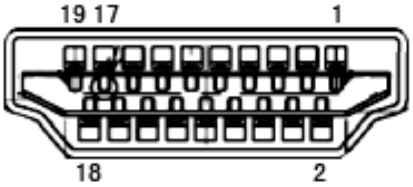

19-Pin Color Display Signal Cable

Pin No.	Signal Name	Pin No.	Signal Name	Pin No.	Signal Name
1.	TMDS Data 2+	9.	TMDS Data 0-	17.	DDC/CEC Ground
2.	TMDS Data 2 Shield	10.	TMDS Clock +	18.	+5V Power
3.	TMDS Data 2-	11.	TMDS Clock Shield	19.	Hot Plug Detect
4.	TMDS Data 1+	12.	TMDS Clock-		
5.	TMDS Data 1Shield	13.	CEC		
6.	TMDS Data 1-	14.	Reserved (N.C. on device)		
7.	TMDS Data 0+	15.	SCL		
8.	TMDS Data 0 Shield	16.	SDA		

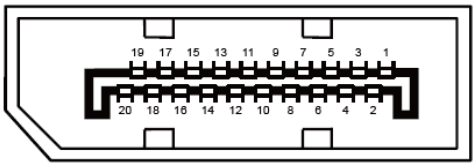

20-Pin Color Display Signal Cable

Pin No.	Signal Name	Pin No.	Signal Name
1	ML_Lane 3 (n)	11	GND
2	GND	12	ML_Lane 0 (p)
3	ML_Lane 3 (p)	13	CONFIG1
4	ML_Lane 2 (n)	14	CONFIG2
5	GND	15	AUX_CH(p)
6	ML_Lane 2 (p)	16	GND
7	ML_Lane 1 (n)	17	AUX_CH(n)
8	GND	18	Hot Plug Detect
9	ML_Lane 1 (p)	19	Return DP_PWR
10	ML_Lane 0 (n)	20	DP_PWR

Plug and Play

Plug & Play DDC2B Feature

This monitor is equipped with VESA DDC2B capabilities according to the VESA DDC STANDARD. It allows the monitor to inform the host system of its identity and, depending on the level of DDC used, communicate additional information about its display capabilities.

The DDC2B is a bi-directional data channel based on the I2C protocol. The host can request EDID information over the DDC2B channel.