Ventum 200 Air

PC CASE

ENDORFY

Think ~~outside~~ *inside* the box.

The Endorfy Ventum 200 Air is a ~~man~~ *case* in black, built for special tasks in mind. It keeps your precious components cool and collected, the perforated front panel protecting them from dust — and thanks to the tempered-glass window, you can always sneak a peek inside to admire your pro cable management.

Stratus 120 PWM fans
Includes 4 powerful and durable Stratus fans with PWM speed control, co-developed with Synergy Cooling.

Mesh front panel
Fine mesh structure lets airflow in while keeping the dust out.

Convenient dust filters
Front steel mesh and magnetic dust filters on the top and bottom pop off easily for cleaning.

Wide cooling compatibility
Enough room for tall heatsinks up to 161 mm and large radiators up to 360 mm in front or 240 mm on top of the case.

Compact form factor
Shorter footprint that a regular tower saves valuable desk space.

Dual-chamber layout
Modern internal layout separates airflow zones and hides cables and storage from view.

3 storage mounts
Fit three drives, including one 3.5 inch HDD, in hidden mounts without blocking the airflow.

Logistics data

Launch date	**2022-11-18 (Friday)**	Dimensions and weight of retail package	**440×216×373 mm / 5.5 kg**
Product code	**EY2A002**	MSRP	**61 EUR**
EAN	**5903018666211**		

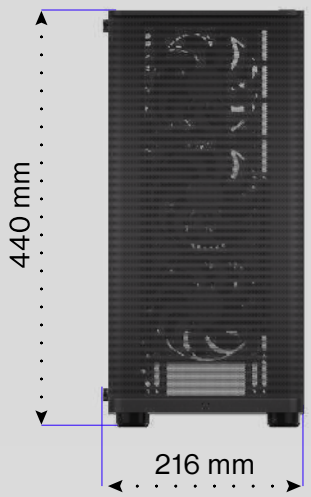

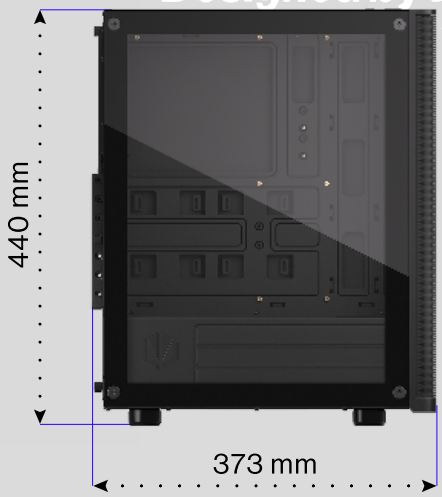

Technical specifications

Product code	**EY2A002**
EAN	**5903018666211**
Product type	**PC case**
Dimensions [mm]	**440×216×373**
Motherboard form factor	**ATX / microATX / ITX**
Video card clearance (GPU) [mm]	**315**
CPU cooler clearance [mm]	**161**
Power supply clearance [mm]	**180**

Cooling system

Fan capacity (maximum)	**7**
Fans (included)	**4**
Front (included)	**3× Stratus 120 PWM (200 – 1400 rpm)**
Rear (included)	**1× Stratus 120 PWM (200 – 1400 rpm)**

Radiator capacity

Front [mm]	**1× 120 / 240 / 280 / 360**
Top [mm]	**1× 120 / 240**
Rear [mm]	**1× 120**

Dust filters

Front	**Mesh**
Top	**Magnetic**
Bottom	**Magnetic**

Number of bays (internal)

2,5"/3,5"	**1**
2,5"	**2**

Front I/O

USB-A	**2**
AUDIO JACK	**2**
POWER button	**1**
RESET/LED button	**1**

What's in the box?

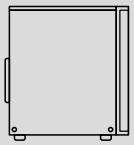

1 **Ventum 200 Air case**

2 **4× Stratus 120 PWM fan (preinstalled)**

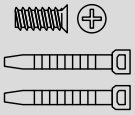

3 **Installation accessories**

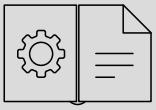

4 **Safety instruction**

ENDORFY can cater to every desire and requirement.

All you need is your imagination and passion for computer hardware. We handle the rest and deliver proven, functional and efficient products. This combination will make you proud and let you experience the emotions that come with computer hardware, its configuration and PC gaming.